Hydraulic seals – linear

ROD SEALS

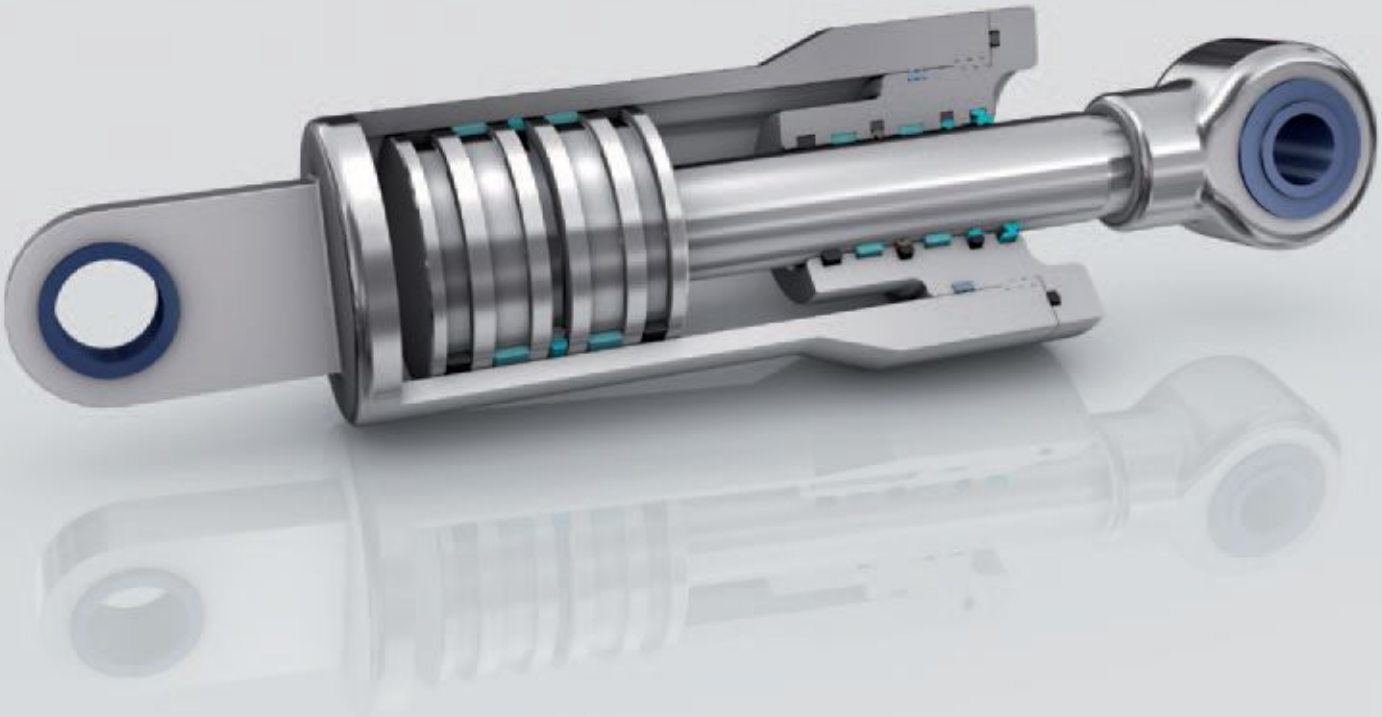

Your Partner for Sealing Technology

Trelleborg Sealing Solutions is a major international sealing force, uniquely placed to offer dedicated design and development from our market-leading product and material portfolio: a one-stop-shop providing the best in elastomer, thermoplastic, PTFE and composite technologies for applications in aerospace, industrial and automotive industries.

With 50 years of experience, Trelleborg Sealing Solutions engineers support customers with design, prototyping, production, test and installation using state-of-the-art design tools. An international network of over 70 facilities worldwide includes over 25 manufacturing sites, strategically-positioned research and development centers, including materials and development laboratories and locations specializing in design and applications.

Developing and formulating materials in-house, we utilize the resource of our material database, including over 2,000 proprietary compounds and a range of unique products.

Trelleborg Sealing Solutions fulfills challenging service requirements, supplying standard parts in volume or a single custom-manufactured component, through our integrated logistical support, which effectively delivers over 40,000 sealing products to customers worldwide.

Facilities are certified to ISO 9001:2008 and ISO/TS 16949:2009. Trelleborg Sealing Solutions is backed by the experiences and resources of one of the world's foremost experts in polymer technology: the Trelleborg Group.

ISO 9001:2008

ISO/TS 16949:2009

To obtain the best recommendation for a specific application, please contact your local Trelleborg Sealing Solutions marketing company.

This edition supersedes all previous brochures.

TRELLEBORG
SEALING SOLUTIONS

Introduction

The Trelleborg Group

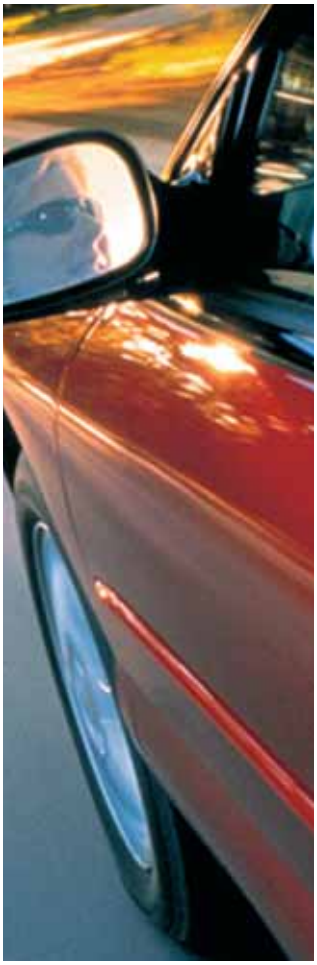

Automotive

- Antivibration Systems
- Noise and Vibration Dampening
- Fluid Systems

Wheel Systems

- Agricultural and Forestry Tires
- Industrial Tires

Engineered Systems

- Engineering Solutions
- Marine Fenders
- Industrial Fluid Control
- Sealing Profiles for Buildings
- Water Proofing
- Offshore

Sealing Solutions

- Precision seals for the Industrial, Automotive and Aerospace markets

Trelleborg Sealing Solutions

Food, Pharmaceutical and Chemical Processing

Machine Tools

Oil and Gas

Semiconductor

Automotive

Aerospace

Fluid power

Life Sciences

Off-Highway

We build long term partnerships with customers and suppliers by providing leading technology and excellent service

Renewable Energy

TRELLEBORG
SEALING SOLUTIONS

Global Resources

Americas

- 1 Research & Development Centers
- 13 Marketing Companies
- 1 Logistics Centers SCM
- 8 Manufacturing Sites

Worldwide

- 7 Research & Development Centers
- 43 Marketing Companies
- 4 Logistics Centers SCM
- 23 Manufacturing Sites

TRELLEBORG
SEALING SOLUTIONS

Global Resources

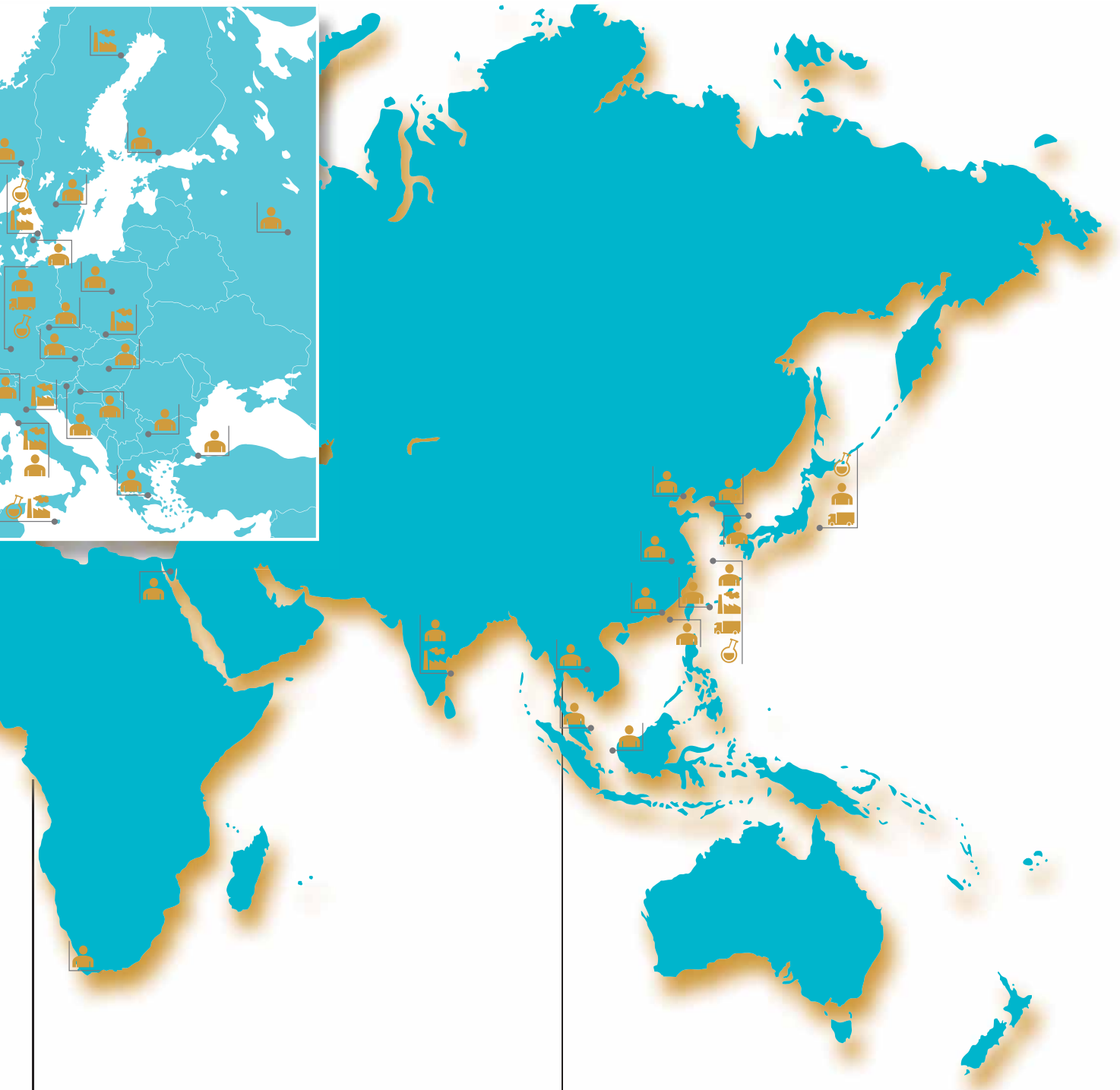

Europe

- 4 Research & Development Centers
- 19 Marketing Companies
- 1 Logistics Centers SCM
- 13 Manufacturing Sites

Asia

- 2 Research & Development Centers
- 11 Marketing Companies
- 2 Logistics Centers SCM
- 2 Manufacturing Sites

TRELLEBORG
SEALING SOLUTIONS

Mission Statement

Our Mission

We will be the supply partner of first choice within our chosen markets, working globally through our local teams. We will build long-term partnerships with customers and suppliers by providing leading technology and excellent service. We are determined to be different.

Sealing technology

Trelleborg Sealing Solutions offers an outstandingly comprehensive sealing portfolio – a one-stop shop providing the best in elastomer, thermoplastic, PTFE and composite technologies; our solutions are featured in virtually every application conceivable within the aerospace, automotive and industrial industries.

A worldwide presence

We are uniquely placed to offer a dedicated design and development service for sealing solutions, globally servicing, supporting and supplying our customers through an unrivalled international network.

- Over 70 facilities worldwide
- More than 20 manufacturing sites
- 7 strategically positioned materials and development laboratories
- Internationally linked design and application centers

Commitment - To customers' needs long-term

The aim of Trelleborg Sealing Solutions is to facilitate customers in the achievement of cost effective, durable solutions that match their specific business requirements and needs. We are one of the world's foremost experts in polymer sealing technology. We develop and manufacture market safety-critical polymer-based precision seals and associated systems.

TRELLEBORG
SEALING SOLUTIONS

Mission Statement

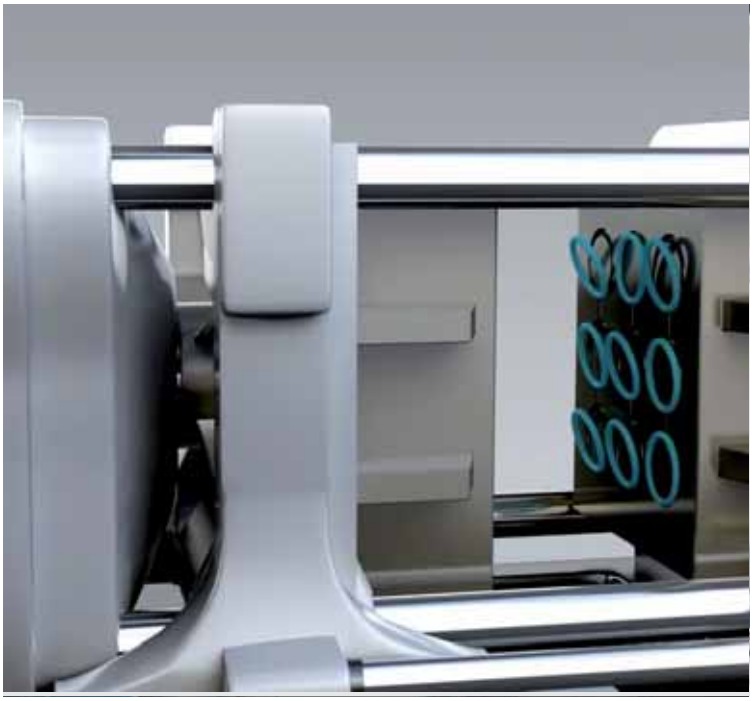

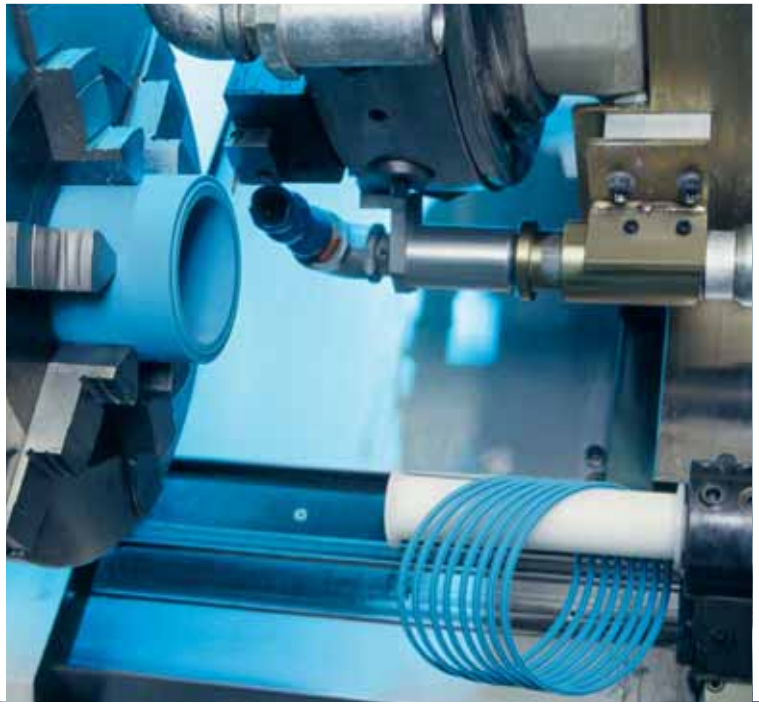

Latest information available at www.tss.trelleborg.com
Edition January 2011

TRELLEBORG
SEALING SOLUTIONS

Products, brands and materials

Our pioneering products

Trelleborg Sealing Solutions is pioneering within the sealing industry and continuously developing innovative products.

- Turcon® AQ Seal®
- D-A-S Compact Seal®
- Turcon® Double Delta®
- Turcon® Excluder®
- Turcon® Glyd Ring® T
- Turcon® Hatseal®
- Zurcon® L-Cup®
- Turcite® Slydring®
- Turcite® B-Slydway®
- Turcon® Stepseal® 2K
- Turcon® Stepseal® V
- V-Ring®
- Varilip®
- Turcon® Variseal®
- Turcon® VL-Seal™
- Turcon® Wedgpak®
- Wills Rings®
- Zurcon® Wynseal®

World renowned names united

We own many of the longest established and leading names within the seal industry. These include:

- American Variseal
- Busak+Shamban
- Dowty Seals
- Chase Walton
- Forsheda
- GNL
- Hydro-Components
- Impervia
- Nordex
- Orkot
- Palmer Chenard
- Polypac
- SF Medical
- Shamban
- Silcofab
- Skega
- Stefa
- Wills

Proprietary materials

Ongoing development has yielded some of the most successful sealing materials available for these types for sealing.

- HiMod®
- Isolast®
- Luytex®
- Orkot®
- Turcite®
- Turcon®
- Turel®
- Zurcon®

Products, brands and materials

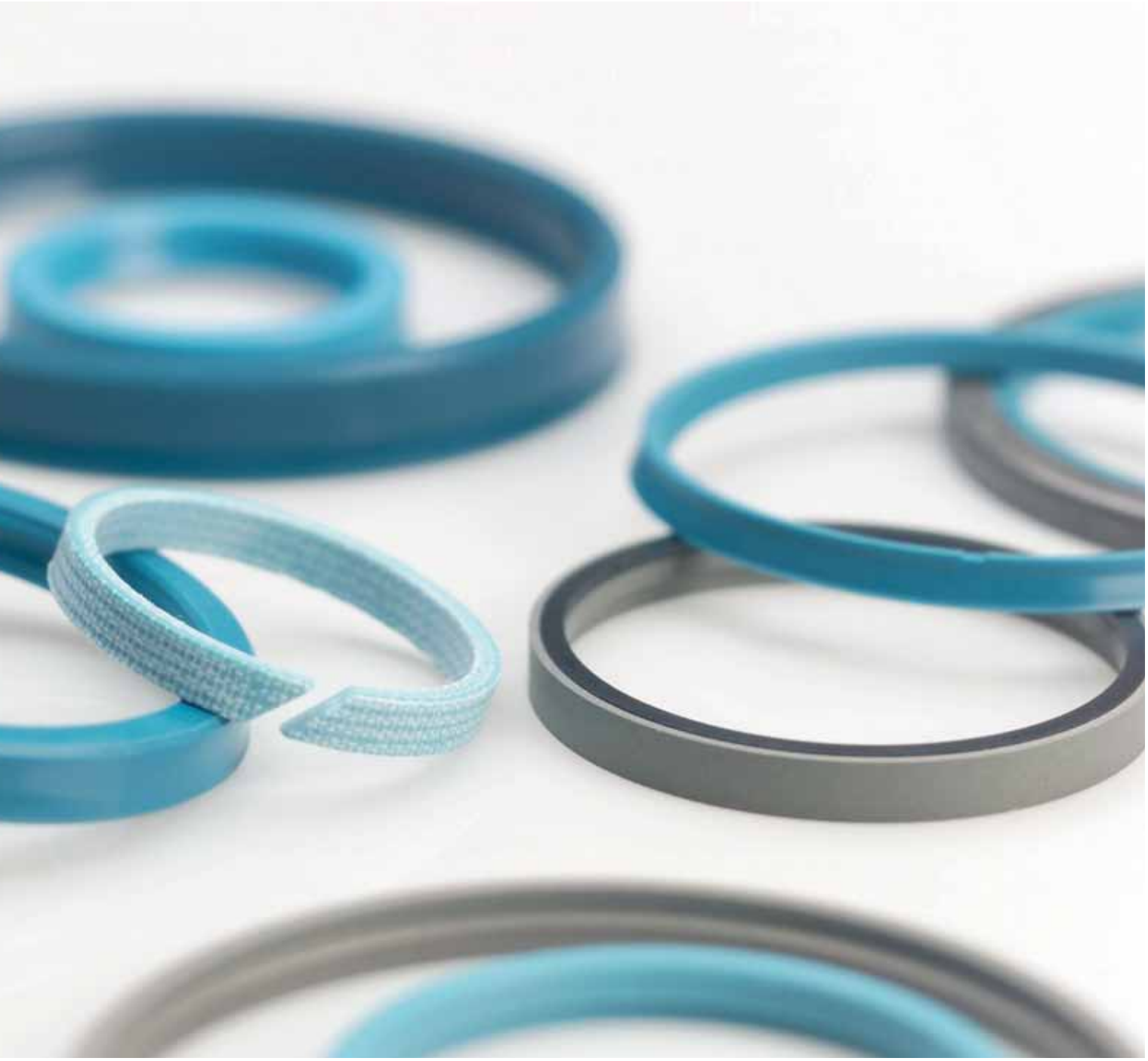

Latest information available at www.tss.trelleborg.com
Edition January 2011

TRELLEBORG
SEALING SOLUTIONS

Seals get animated

A range of films specific to different industries or products

Seals get animated

Complex sealing configurations can feature a large number sealing elements. Trying to illustrate these on a 2D page is difficult and can never properly show their function or characteristics. Trelleborg Sealing Solutions therefore turned to the latest graphic technologies to produce 3D animations of applications and typical sealing solutions for them.

A range of films specific to different industries or products are available to view on the Trelleborg Sealing Solutions website or via YouTube.

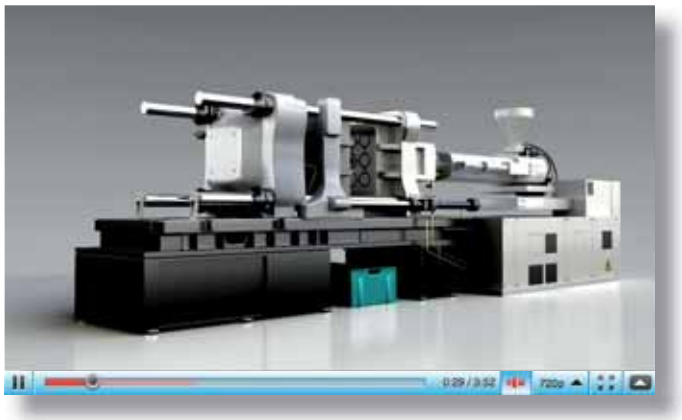

You can now link to our films and animations from

www. **tss.trelleborg.com/films**

or view them on You Tube at

www. **YouTube.com/trelleborgseals**

Seals get animated

TRELLEBORG
SEALING SOLUTIONS

YouTube™

TRELLEBORG
SEALING SOLUTIONS

Online tools make life easier

Trelleborg Sealing Solutions has developed a number of online tools that make the working life of an engineer specifying seals easier.

Online tools make life easier

Trelleborg Sealing Solutions has developed a number of online tools that make the working life of an engineer specifying seals easier.

All these industry-leading online tools are available free-of-charge from the Trelleborg Sealing Solutions website at www.tss.trelleborg.com. To use these advanced services all you have to do is register on the Members Area.

www. tss.trelleborg.com

Sealing Solutions Configurator

The Sealing Solutions Configurator is the first tool of its kind offered by any seal supplier. It allows engineers to identify a proven sealing solution for their specific application in just four easy steps.

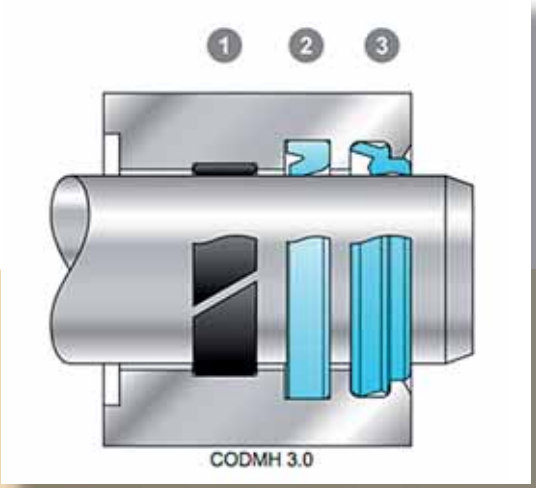

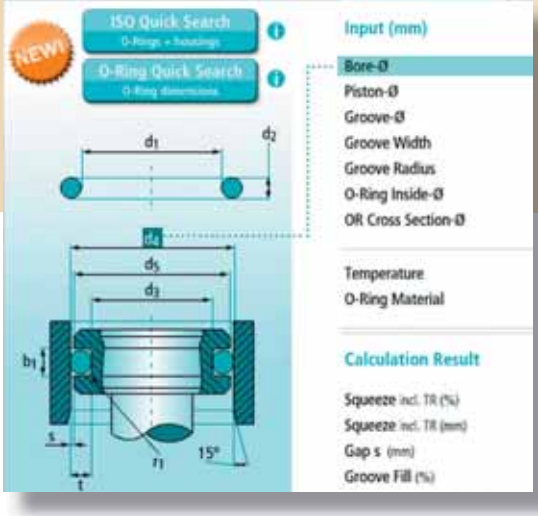

O-Ring Calculator

An industry-leading tool, the easy to use O-Ring calculator includes a sizing capability, design parameter recommendations and complete measurements. Results and comments may be printed, saved online or filed as a PDF.

Online tools make life easier

Powerful electronic Catalog

With the powerful electronic catalog you can search through over 100,000 seals by item number or by their properties. Comprehensive and detailed information can be accessed along with an interactive quote facility.

Versatile CAD service

The CAD download facility provides thousands of drawings from a wide seal range. It gives the option of 2 or 3 dimensional files, in a range of formats to suit most commonly used CAD systems.

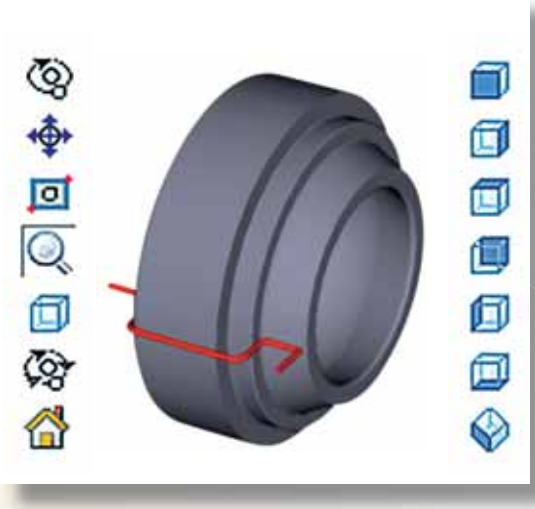

Materials search and chemical compatibility check

These two programs allow you to find out the compatibility of sealing materials to hundreds of different media and help identify the most suitable material for your application.

TRELLEBORG
SEALING SOLUTIONS

Part I
Rod Seals

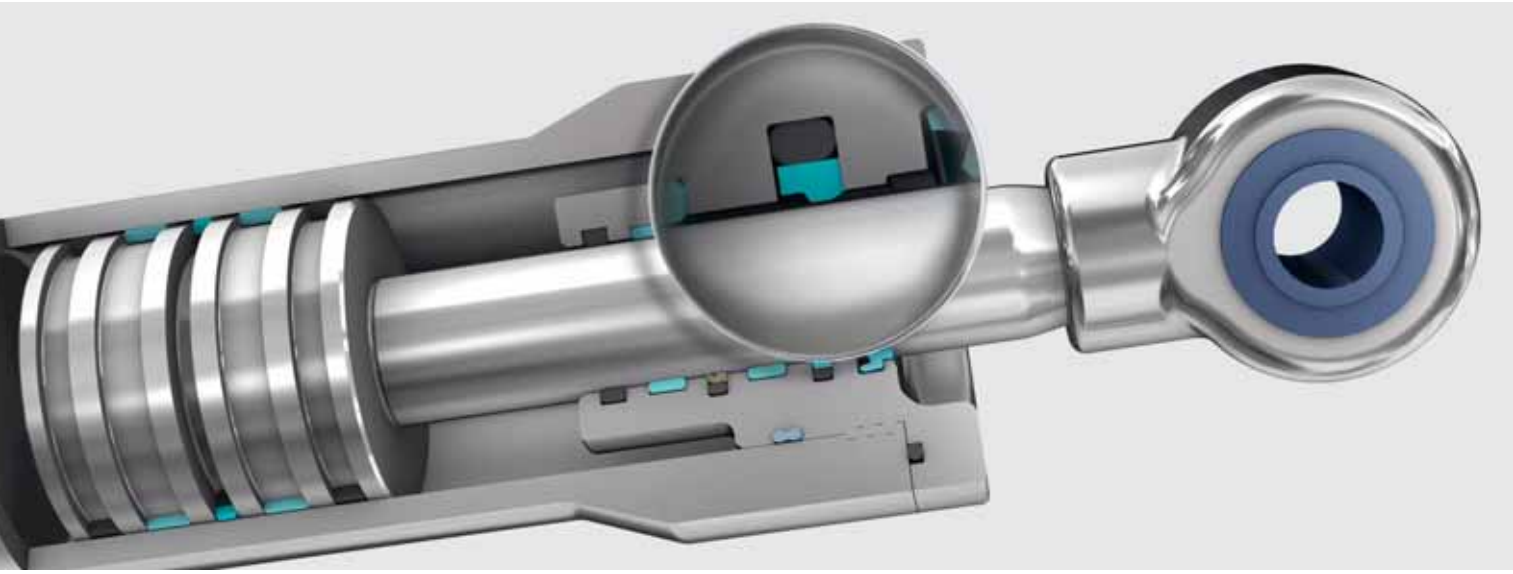

Contents

■ Choice of the Sealing Element

Sealing elements have a decisive influence on the design, function and service life of hydraulic and pneumatic cylinders and systems.

This applies equally to the piston rod seals where leak tightness, resistance to wear and gap extrusion, resistance to process media, resistance to high and low temperatures, low friction, compact form and simple installation are demanded in order to meet the requirements of industry for a functional sealing solution.

The significance of these parameters and their limits is generally dependent on the requirements of the specific application. Trelleborg Sealing Solutions has therefore developed a complete range of seals which, due to their optimized geometries and designs and the use of high-quality materials such as Turcon® and Zurcon®, satisfy the technical and economic demands of the industry in full.

In order to be in a position to select the most appropriate seal type and material, it is necessary to first define all the desired functional parameters. Table I can then be used to make an initial selection of seals and materials according to the specific requirements of the application.

The second column of the table contains the number of the page on which further general information together with specific design and installation instructions on the particular seal type and materials (or material combinations with multi-element seals, e.g. Turcon® Stepseal® 2K) can be found.

Furthermore on page 10, attention is drawn to the quality of the mating surface. We recommend that the limits specified there be observed, as they have a decisive influence on the functionality and service life of the system.

The final choice of seal type and material must also take account of the detailed information on the seal elements.

Please do not hesitate to contact our Technical Department for further information on specific applications and special technical questions.

Note on Ordering

All multi-element standard rod seals, e.g. Turcon® Stepseal® 2K, are generally supplied as complete seal sets. The supply includes the seal and matching elastomer energizing elements. The O-Ring does not have to be ordered separately. It is also possible to use other O-Ring materials from our O-Ring catalogue. In this case, please order the seal ring and O-Ring separately.

When ordering the seal ring separately, it is then not necessary to mention the "O-Ring material code" in the TSS Article No. shown in the ordering examples.

Older designs of seals no longer contained in this catalogue naturally continue to be available (see chapter Non Standard Seals). For all new applications, however, we recommend the use of the seal types and preferred sizes (ISO series, wherever possible) listed in this catalogue.

Other combinations of Turcon® materials and special designs can be developed and supplied for special applications in all intermediate sizes up to 2.600 mm diameter, provided there is sufficient demand.

The sizes contained in this catalogue are mostly available from stock or can be supplied at short notice. We reserve the right to modify our supply programme.

Table I Selection Criteria for Rod Seals

Seal		Application				Standard	Size Range	Action		Technical Data*			Recommended Seal Material
										Temp. Range **	Speed	Pressure	
Type	Page	Field of Application	Light	Medium	Heavy	ISO/DIN	mm	Single	Double	°C	m/s	MPa max.	
Turcon® Stepseal® 2K	19	Mobile hydraulics	●	●	●	7425/2	3-2600	X		-45/ +200	15	50	Turcon® M12
		Standard cylinders	●	●	●								
		Machine tools	●	●	●							50	Turcon® T46
		Injection moulding machines	●	●	●								
		Presses	●	●	●							20	Turcon® T05
		Automotive industry	●	●	●								
		Hydraulic hammers	●	●	●		3-2200			-45/ +110	2	60	Zurcon® Z51
		Servo hydraulic	●	●	●								
Turcon® Stepseal® V	39	Mobile hydraulics	●	●	●	7425/2	19-2600	X		-45/ +200	15	50	Turcon® M12
		Construction equipment	●	●	●								
		Presses	●	●	●							50	Turcon® T46
		Injection moulding machines	●	●	●								
Zurcon® Rimseal	53	Mobile hydraulics	●	●	●	7425/2	8-2200	X		-45/ +110	In tandem with Turcon® Stepseal® 2K 5m/s	In tandem 60 MPa As single seal 25 MPa	Zurcon® Z52
		Standard cylinders	●	●	●								
		Machine tools	●	●	●								
		Injection moulding machines	●	●	●								
		Presses	●	●	●								
Veepac CH	63	Presses	●	●	●	-	10-750	X		-30 to +130	0.5	40	Rubber fabric reinforced + POM
		Steel mills	●	●	●								
		Ship hydraulics	●	●	●								
		Scrape shears	●	●	●								
		Civil engineering	●	●	●								
		Continous casting	●	●	●								
		Special hydraulic cylinders	●	●	●								
		Water locks	●	●	●								
Veepac CH/ G5	79	Hydraulic cylinder		●	●	-	25-160	X		-30/ +130	0.5	40	Rubber fabric reinforced + POM
		Presses		●	●								
		Mining		●	●								
		Steel mills		●	●								
		Water locks		●	●								

* The data below are maximum values and cannot be used at the same time. The max. pressure depends on temperature and gap dimension.
** Temperature Range is depending on choise of elastomer material and Media.

Rod Seals

Seal		Application				Standard	Size Range	Action		Technical Data*			Recommended Seal Material
										Temp. Range **	Speed	Pressure	
Type	Page	Field of Application	Light	Medium	Heavy	ISO/DIN	mm	Single	Double	°C	m/s	MPa max.	
Selemaster SM	85	Hydraulic cylinder		●	●	-	15-335	X		-40/ +130	0.5	70	Rubber fabric reinforced + POM
		Presses		●	●								
		Mining		●	●								
		Steel mills		●	●								
		Water locks		●	●								
Balsele	93	Hydraulic cylinder	●	●		5597/1	10-1200	X		-30/ +130	0.5	25 With Back-up 40	Rubber fabric reinforced NBR
		Presses	●	●									
		Truck cranes	●	●									
Zurcon® L-Cup®	113	Hydraulic cylinder	●	●		5597/1	6-250	X		-35/ +110	0.5	40	Zurcon® Z20
		Tail lift cylinder	●	●									
		Steering cylinder	●	●									
U-Cup RU2	121	Hydraulic cylinder	●	●		5597/1	6-185	X		-35/ +110	0.5	40	Zurcon® Z20
		Telescopic cylinders	●	●									
		Mobile hydraulic	●	●									
U-Cup RU6	127	Hydraulic cylinder	●	●		7425/2	12-350	X		-35/ +110	0.5	25	Zurcon® Z20
		Industrial hydraulic	●	●									
		Mobile hydraulic	●	●									
U-Cup RU9	133	Hydraulic cylinder	●	●		5597/1	6-140	X		-35/ +110	0.5	40	Zurcon® Z20
		Industrial hydraulic	●	●									
		Mobile hydraulic	●	●									
Buffer Seal	141	Earthmoving Equipment		●	●	7425/2	40-140	X		-35/ +110	1	40 60 (peak)	Zurcon® Z20
		Mobile hydraulic		●	●								
		Construction Machinery		●	●								
Variseal® M2	149	High and low temperatures	●	●		AS4716	3-2600	X		-70/ +260	15	40	Turcon® T40
		Aggresive media	●	●								20	Turcon® T05
		Foodstuff	●	●									
VL Seal®	155	Automation	●	●	●	-	3-2600	X		-45/ +200	15	50	Turcon® M12
		Telescopic cylinders	●	●	●							50	Turcon® T46
		Valve stems	●	●	●		3-2200			45/ +110	2	25	Zurcon® Z52
		Down-hole tools	●	●	●								

* The data below are maximum values and cannot be used at the same time. The max. pressure depends on temperature and gap dimension.
** Temperature Range is depending on choise of elastomer material and Media.

TRELLEBORG
SEALING SOLUTIONS

Rod Seals

Seal		Application				Standard	Size Range	Ac-tion		Technical Data*			Recom-mended Seal Material
										Temp. Range **	Speed	Pressure	
Type	Page	Field of Application	Light	Medium	Heavy	ISO/DIN	mm	Single	Double	°C	m/s	MPa max.	
Glyd Ring® RG	167	Special cylinder	●	●	●	7425/2	3-2600		X	-45/ +200	15	50	Turcon® M12
		Pumps and valves	●	●	●							50	Turcon® T46
		Machine tools	●	●	●							20	Turcon® T05
		Servo equipment	●	●	●		3-2200			-45/ +110	2	60	Zurcon® Z51
Glyd Ring® T RT	181	Special cylinder	●	●	●	7425/2	3-2600		X	-45/ +200	15	50	Turcon® M12
		Pumps and valves	●	●	●								
		Machine tools	●	●	●							50	Turcon® T46
		Robotics/ manipulators	●	●	●								
		Presses	●	●	●		3-2200			-45/ +110	2	60	Zurcon® Z51
AQ-Seal® with Bean Seal	195	Hydraulics	●	●		7425/2	18-2200		X	-45/ +110	2	40	Turcon® M12
		Machine operation	●	●									
		Fluid/gas separation	●	●								40	Turcon® T46
		Holding cylinders	●	●									
AQ-Seal® 5 with Bean Seal	205	Hydraulics		●	●	-	32-2200		X	-45/ +110	2	50	Turcon® M12
		Fluid/gas separation		●	●								
		Mobile hydraulics		●	●							50	Turcon® T46
		Holding cylinders		●	●								
Wynseal M	215	Industrial hydraulics	●	●		7425/2	3-2600		X	-45/ +200	10	35	Turcon® M12
		Handling machinery	●	●			3-2200			-45/ +110	0.5	25	Zurcon® Z52
		Agriculture	●	●								45	Zurcon® Z51
Double Delta® RD	225	Valve stems	●	●		-	3-2600		X	-45/ +200	15	20	Turcon® T05
		Mini hydraulic	●	●								35	Turcon® M12
		Hydraulic tools	●	●								35	Turcon® T46

* The data below are maximum values and cannot be used at the same time. The max. pressure depends on temperature and gap dimension.
** Temperature Range is depending on choise of elastomer material and Media.

Redundant Sealing System

Sealing of environmentally harmful fluids has led Trelleborg Sealing Solutions to develop innovative sealing systems to meet the ever demanding industry specifications with regard to leak-free performance and high service life.

In heavy duty applications, leak free performance and high service life cannot be assured by a single sealing element; therefore, specially developed "system seals" are arranged in series, building a "tandem arrangement".

Each sealing element in a system has its specific function and their interaction needs to be secured to get a redundant sealing system.

The primary seal in PTFE based proprietary Turcon® material generates low friction and has an excelent wear and extrusion resistance under extreme working conditions. It allows a fine lubrication film passing this first barrier, ensuring the necessary lubrication of the secondary sealing element for long service life.

The "tandem arrangement" requires an outstanding back-pumping ability of the primary seal and the secondary seal, if a double acting scraper is installed. A combination of different sealing materials in a system, Turcon® and Zurcon®, (PTFE and Polyurethane) ensures the best sealing performance.

Trelleborg Sealing Solutions has pioneered work in this area and continues development of redundant sealing today.

Outstanding solutions to such applications have been the Turcon® Stepseal® 2K in tandem arrangement. A tandem sealing system can also be created by using e.g. Zurcon® Rimseal, Zurcon® L-Cup® or U-Cup as secondary sealing elements. Depending on type of secondary seal, a single- or double acting scraper completes the system, to offer the highest possible operation reliability, ensuring both adequate lubrication of the sealing system and a long service life.

The Figure 1 shows as an example a redundant sealing system consisting of Turcon® Stepseal® 2K, Zurcon® Rimseal and Rod Scraper DA 22 with corresponding wear ring arrangement.

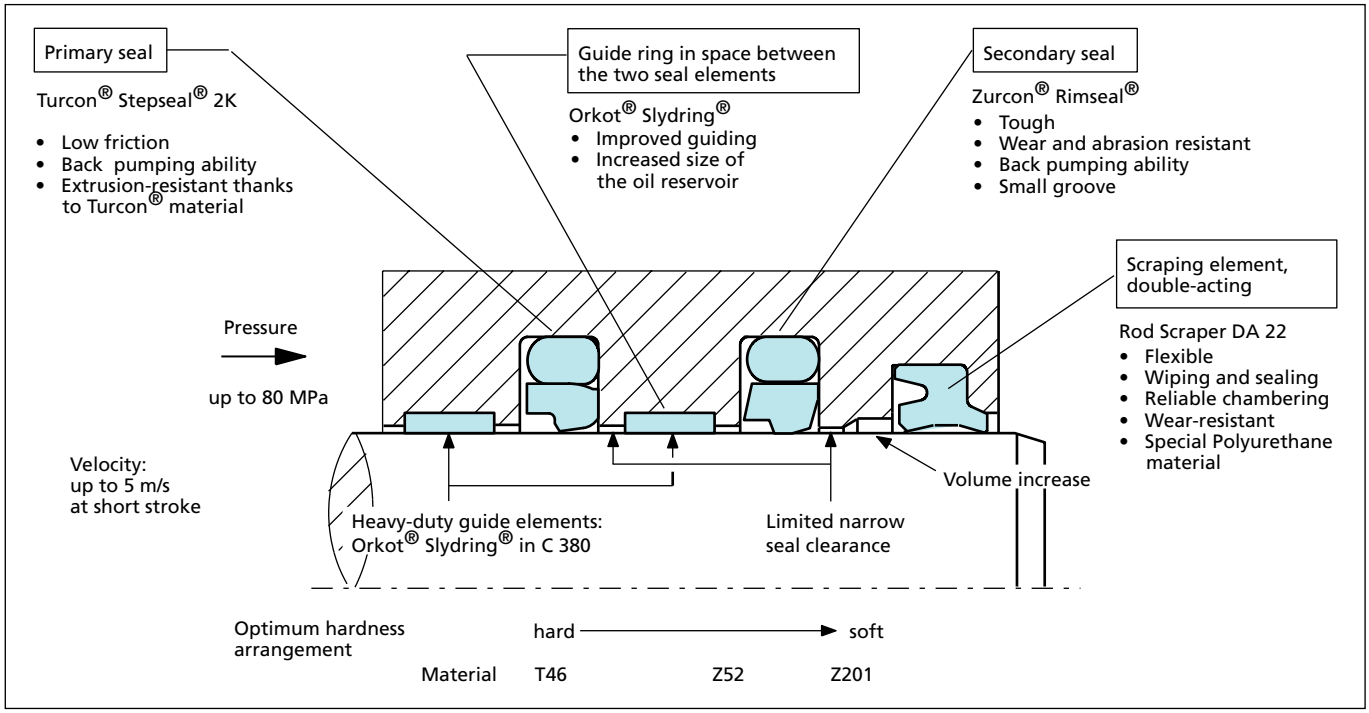

Figure 1 Example of a Redundant Modular Sealing System

■ Design Instructions

Lead-in Chamfers

In order to avoid damage to the rod seal during installation, lead-in chamfers and rounded edges must be provided on the piston rods (see Figure 2). If this is not possible for design reasons, a separate installation tool must be used.

The minimum length of the lead-in chamfer depends on the profile size of the seal and can be seen from the following tables.

Generally Δd_N min. from Table II, Table III and Table IV is recommended but Δd_N must also exceed 0.015 x rod diameter d_N (relevant for big diameter rods).

Table II Elastomer Energized Seals

Lead-in Chamfer Diameter reduction Δd min.	Groove Width L_1*
1.1	2.2
1.4	3.2
1.9	4.2
2.7	6.3
3.5	8.1
4.0	9.5
5.5	13.8

* The dimension L1 for the groove width can be found for all seal series in the appropriate table "Installation dimensions".

Table III U-Cups and Variseal®

Lead-in Chamfer Diameter reduction Δd min.	U-Cups Type RU0, RU2, RU3 and RU6 Groove Depth*	Turcon® Variseal® M2 Series
1.1	3.0 - 3.5 - 4.0	
1.1	5.0	
1.4	6.0 - 6.5	
2.2	7.5 - 8.0	RVA0
2.7	10.0	RVA1, RVA2
3.5	12.5	
4.0	15.0	RVA3
5.5	20.0	
6.5		RVA4

* The groove depth is calculated from: (d1 -d)/2. The dimensions for d1 and d can be found in the tables, "Installation dimensions".

Table IV Double Delta®

Lead-in Chamfer* Diameter reduction Δd min.	O-Ring Cross Section** d_2	
1.1	1.78	-
1.4	2.40	2.62
1.9	3.00	3.53
2.7	5.33	5.70
3.5	7.00	8.40

* Though not less than 1.5 % of service diameter (bore/rod diameter).

** The O-Ring cross section d_2 can be found in the appropriate table "Installation dimensions", from chapter Double Delta®.

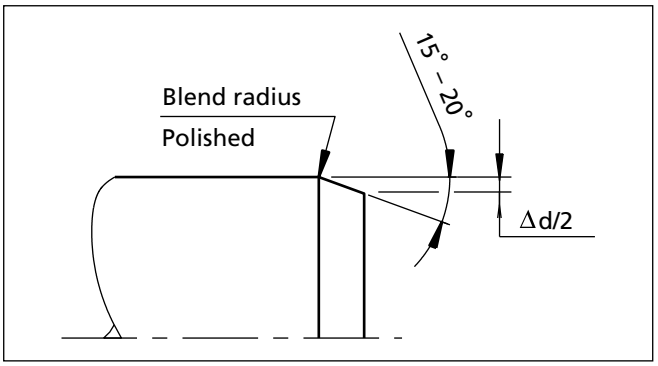

Figure 2 Lead-in chamfers

Distance between Grooves

When installing tandem seal arrangement or double-acting scraper seals in conjunction with rod seals with back pumping effects such as Turcon® Stepseal® 2K and Zurcon® Rimseal, we recommend the following arrangement:

- Distance between seal grooves and/or scraper seal groove L = at least groove depth X
- Oil reservoir for collecting the returning oil as shown in Figure 3.

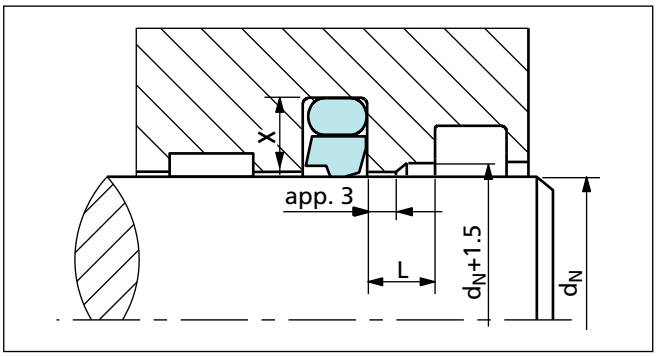

Figure 3 Recommendation for groove spacings between grooves

Surface Roughness DIN EN ISO 4287

The functional reliability and service life of a seal depend to a very great extent on the quality and surface finish of the mating surface to be sealed.

Scores, scratches, pores, concentric or spiral machining marks are not permitted. Higher demands must be made on the surface finish of dynamic surfaces than of static mating surfaces.

The characteristics most frequently used to describe the surface microfinish R_a, R_z and R_{max} are defined in DIN EN ISO 4287. These characterics alone, however, are not sufficient for assessing the suitability in seal technology. In addition the material contact area of the surface roughness profile R_{mr} in accordance with DIN EN ISO 4287 should be demanded. The significance of this surface specification is illustrated in Figure 4. It shows clearly that specification of R_a and R_z alone does not describe the surface roughness profile accurately enough for the seal technology and is thus not sufficient for assessing the suitability. The material contact area R_{mr} is essential for assessing surfaces, as this parameter is determined by the specific surface roughness profile. This in turn is directly dependent on the machining process employed.

Trelleborg Sealing Solutions recommends that the following surface finishes be observed:

Table V Surface Roughness

Surface Roughness µm			
Parameter	Mating Surface		Groove Surface
	Turcon® Materials	Zurcon® and Rubber	
R_{max}	0.63 - 2.50	1.00 - 4.00	< 16.0
$R_{z\ DIN}$	0.40 - 1.60	0.63 - 2.50	< 10.0
R_a	0.05 - 0.20	0.10 - 0.40	< 1.6

The material contact area R_{mr} should be approx. 50 to 70%, determined at a cut depth c = 0.25 x R_z, relative to a reference line of $C_{ref.}$ 5%.

Surface profile	R_a	R_z	R_{mr}
closed profile form 	0.1	1.0	70%
open profile form 	0.2	1.0	15%

Figure 4 Profile forms of surfaces

Figure 4 shows two surface profiles, both of which exhibit nearly the same value for R_z in the test procedure. The difference becomes obvious only when the material contact area of the surface roughness profiles are compared. These show that the upper roughness profile with R_{mr} = 70% has the better seal/mating surface ratio.

Hardware

For optimum performance Trelleborg Sealing Solutions recommends a piston rod of chrome-plated steel.

Material: preferably 42CrMo4V, purity class K3 to DIN 50602.

Induction hardened	min. HRC 45
Hardening depth	min. 2.5 mm

Ground and hard chrome-plated, coating thickness 20 to 30 µm, polished

Roughness	R_a 0.1 to 0.3 µm max. corresponding to N4 DIN/ISO 1302
Material contact area	R_{mr} = 50 to 70%
Cut depth	c = 0.25 x R_z

For other rod materials, special coatings and treatments please contact your local Trelleborg Sealing Solutions Company.

■ Installation Instructions

The following points should be observed before installation of the seals:

- Ensure the piston rod has a lead-in chamfer; if not, use an installation sleeve
- Deburr and chamfer or round sharp edges, cover the tips of screw threads
- Remove machining residues such as chips, dirt and other foreign particles and carefully clean all parts
- The seals can be installed more easily if the rod is greased or oiled. Attention must be paid to the compatibility of the seal materials with these lubricants. Use only grease without solid additives (e.g. molybdenum disulphide or zinc sulphide).
- Do not use tools with sharp edges.

Installation in Split Grooves

Installation in split grooves is problem free. The sequence of installation corresponds to the configuration of the seal, whereby the individual seal elements must not be allowed to twist. During final installation (insertion of the piston rod into the seal), elastomer or spring-energized seals must be sized. The piston rod itself can be used for this purpose, provided that it has a long lead-in chamfer, or use a sizing sleeve.

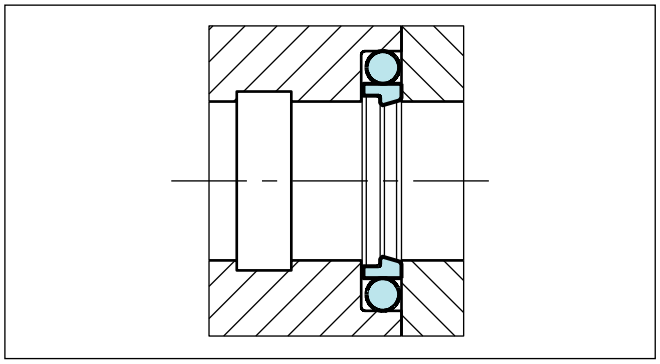

Figure 5 Installation in a split groove

Installation in Closed Grooves

By following the instructions in each seal type description (sizes for closed or split grooves) or using the light series for Turcon® seals, it will result in a problem free installation of our rod seal elements at small diameters.

For Zurcon® and polyurethane (not Turcon®) seals, the use of installation tools is to be recommended. If installation has to be performed without installation tools, however, the following points should be observed:

- Place the O-Ring into the groove (not necessary with U-Cups)
- Compress the Turcon® or Zurcon® seals into a kidney shape while avoiding sharp bends (Figure 6)!

When a rod seal with notches is folded in kidney shape, take care to avoid bending the seal at the position of the notches as this may cause overstretch or damage to the seal material.

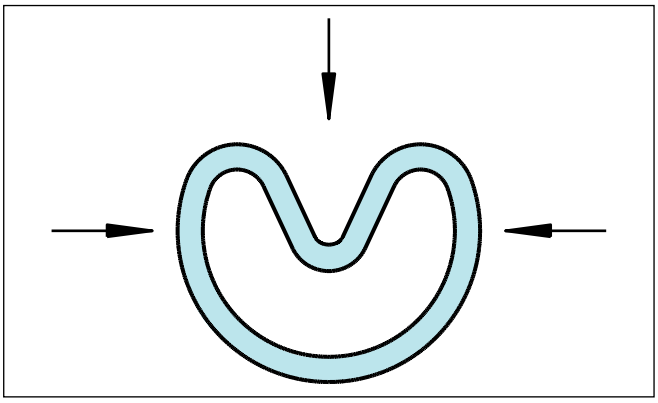

Figure 6 Kidney-shaped deformation of the seal ring

- Place the seal ring in compressed form into the groove and push against the O-Ring in the direction of the arrow (Figure 7).

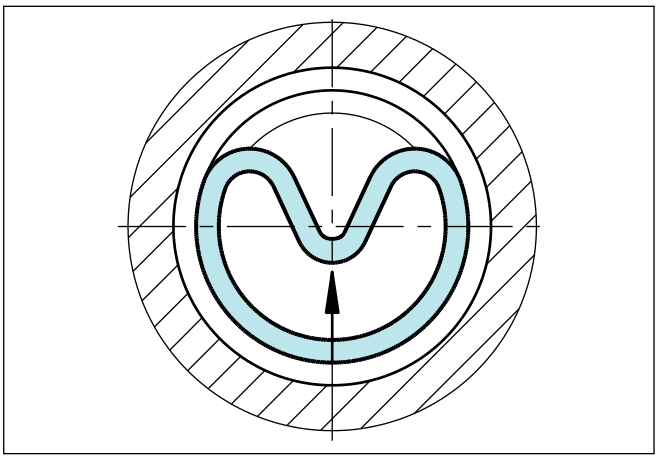

Figure 7 Inserting the seal ring into the closed groove

- After placing into the groove, form the seal into a ring again in the groove by hand.
- Finally size the seal ring using a mandrel which should have a chamfer of 15° to 20° over a length of approx. 30 mm

The sizing mandrel should be made from a polymer material (e.g. polyamide) with good sliding characteristics and high surface quality in order to avoid damage to the seals.

The piston rod itself can also be used for calibration, provided it has a sufficiently long lead-in chamfer.

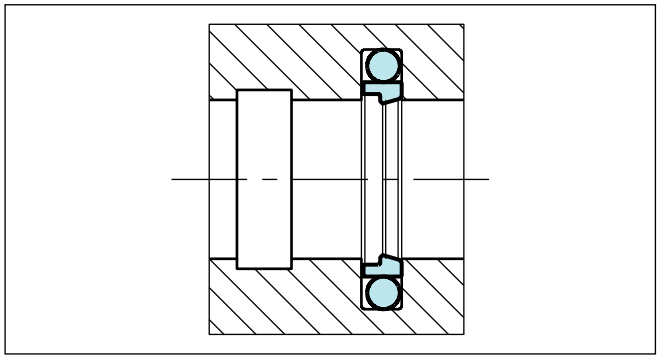

Figure 8 Installation in a closed groove

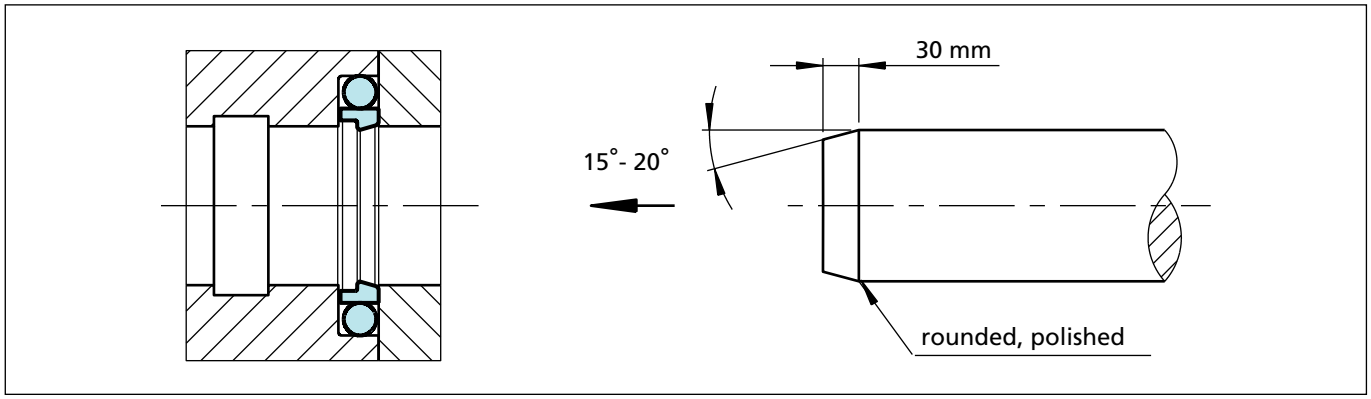

Figure 9 Calibration of the installed seal

Table VI Closed groove installation for Stepseal® 2K

Series	Stepseal® 2K can be installed in closed grooves above the following rod diameters and in the following Turcon® and Zurcon® materials * :	
	Rod Diameter $ød_N$ ≥	**Materials**
RSK0	12	Turcon® M12, T05, T08, T10, T29, T40 and T46. Zurcon® Z51 and Z80
RSK1	16	
RSK2	19	
RSK3	38	
RSK4	70	
RSK8	200	
RSK5	256	
RSK6	650	

* For dimensions under ø30 mm and/or not very accessible grooves it is often imperative to use installation tools. Ask for further information.

Installation of Turcon® VL Seal® in Closed Grooves

Installation in closed grooves is possible for diameters according to Table VII.

Table VII Closed groove installation for VL Seal®

VL Seal® for Rod		
Type	**Diameter**	
REL1	From	Ø30 mm
REL2	From	Ø30 mm
REL3	From	Ø50 mm
REL4	From	Ø80 mm
REL5	From	Ø125 mm
REL6	From	Ø400 mm

The O-Ring is inserted and positioned in the groove, where after the seal is folded and inserted in groove (Figure 10). The seal is folded out in the groove and is thereafter calibrated before the piston rod is inserted.

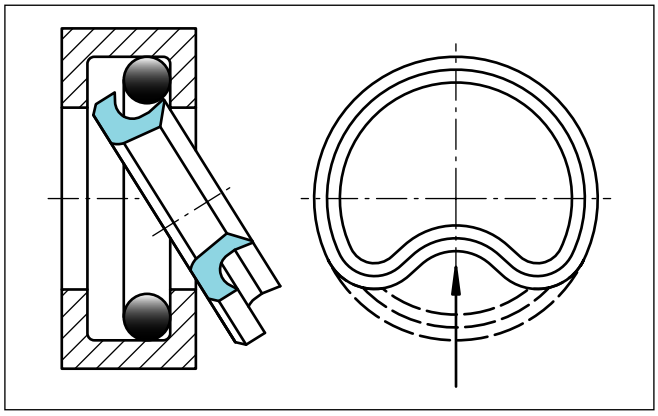

Figure 10 Installation of Rod VL Seal® in closed groove

Installation of Double Delta®

Installation in closed grooves is possible for diameters from 12 mm using the following procedure:

- Place the O-Ring into the groove.
- Compress the Turcon® seal into a kidney shape, while avoiding sharp bends (Figure 11). When a rod seal with notches is folded in kidney shape, take care to avoid bending the seal at the position of the notches as this may cause overstretch or damage to the seal material.
- Place the seal ring in compressed form into the groove and push against the O-Ring in the direction of the arrow in the groove by hand (Figure 12). For diameters smaller than 30 mm an inserter tube is recommended (Figure 13).
- Finally, size the seal ring using a mandrel which should have a chamfer of 10° to 15° over a length of min. 30 mm (Figure 14).

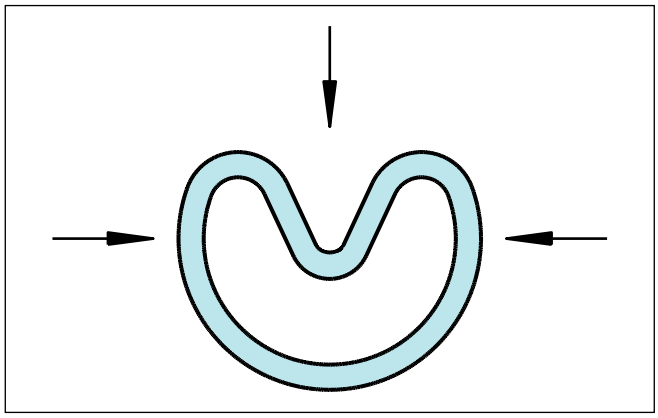

Figure 11 Kidney-shaped deformation

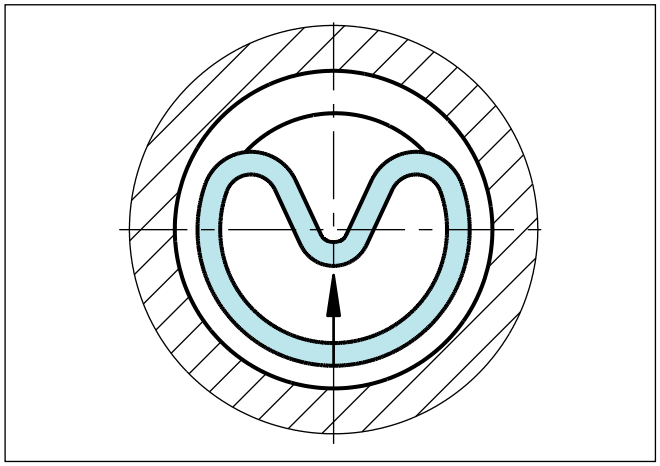

Figure 12 Inserting the seal ring into the closed groove

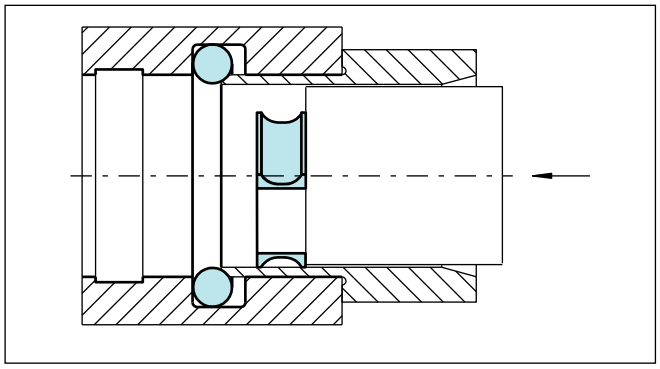

Figure 13 Insertion with an inserter tube

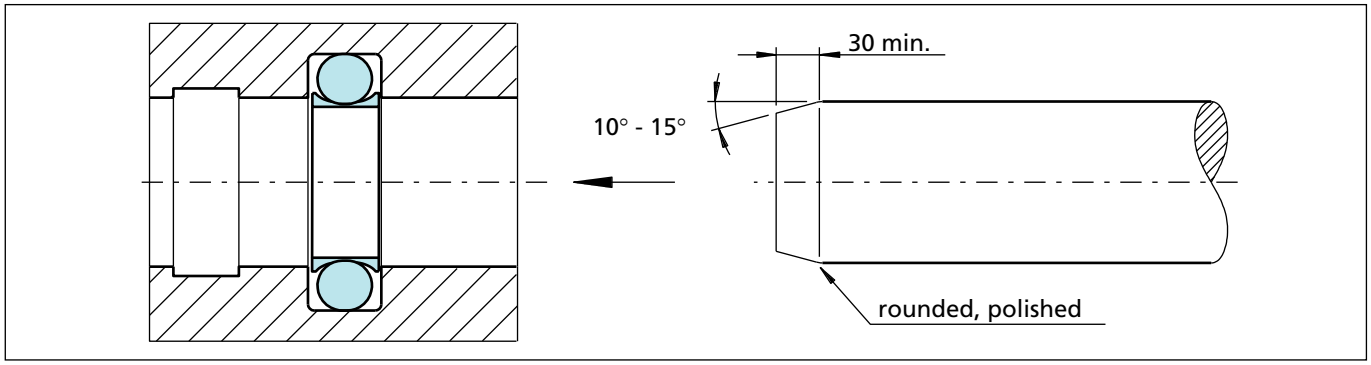

Figure 14 Calibration of the installed seal by means of a calibration mandrel

Installation of Spring Energized Seals

Turcon® Variseal® M2 seals should preferably be installed in split grooves.

Installation in half-open grooves is possible with a snap fitting. Figure 15 shows the design of the groove.

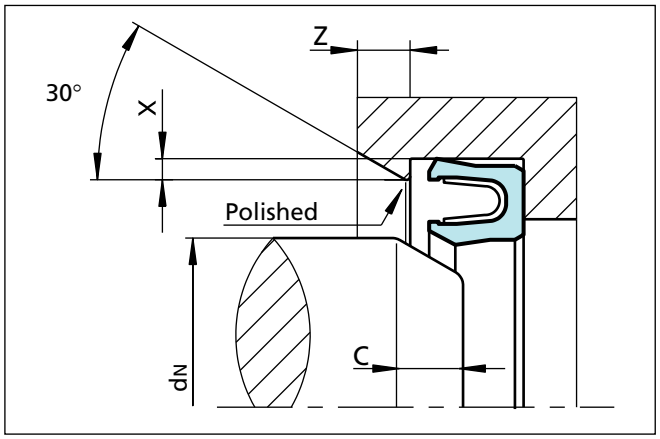

Figure 15 Installation in a half-open groove

Table VIII Installation in Half-Open Grooves

Serial-No.	X min.	d_N min.	Lenght C min.	Z min.
RVA0	0.4	12.0	4.0	2.5
RVA1	0.6	20.0	5.0	3.5
RVA2	0.7	30.0	5.0	3.5
RVA3	0.8	40.0	7.5	4.5
RVA4	0.9	55.0	12.0	7.5
RVA5	1.5	70.0	12.0	7.5

Further details, see Figure 61 and Table XXXVII.

In exceptional cases or with existing designs, an installation in closed grooves is also possible. The details in Table IX should be regarded as guide values for installation.

Table IX Installation in Closed Grooves

Serial-No.	d_N min.
RVA0	30.0
RVA1	70.0
RVA2	110.0
RVA3	300.0
RVA4	500.0
RVA5	800.0

■ Quality Criteria

The cost-effective use of seals and bearings is highly influenced by the quality criteria applied in production. Seals and bearings from Trelleborg Sealing Solutions are continuously monitored according to strict quality standards from material acquisition through to delivery.

Certification of our production plants in accordance with international standards QS 9000 / ISO 9000 meets the specific requirements for quality control and management of purchasing, production and marketing functions.

Our quality policy is consistently controlled by strict procedures and guidelines which are implemented within all strategic areas of the company.

All testing of materials and products is performed in accordance with accepted test standards and specifications,

e.g. random sample testing in accordance with DIN ISO 2859, part 1. Inspection specifications correspond to standards applicable to individual product groups (e.g. for O-Rings: ISO 3601).

Our sealing materials are produced free of chlorofluorinated hydrocarbons and carcinogenic elements.

The tenth digit of our part number defines the quality characteristics of the part. A hyphen indicates compliance with standard quality criteria outlined in this catalogue. Customer-specific requirements are indicated by a different symbol in this position. Customers who require special quality criteria should contact their local Trelleborg Sealing Solutions sales office for assistance. We have experience in meeting all Customer quality requirements.

■ Storage Instructions

Seals and bearings are often stored as spare parts for prolonged periods. Most rubbers change in physical properties during storage and ultimately become unserviceable due, e.g., to excessive hardening, softening, cracking, crazing or other surface degradation. These changes may be the result of particular factors or combination of factors, such as the action of deformation, oxygen, ozone, light, heat, humidity or oils and solvents.

With a few simple precautions, the shelf life of these products can be considerably lengthened.

Fundamental instructions on storage, cleaning and maintenance of elastomeric seal elements are described in international standards, such as:

DIN 7716 / BS 3F68: 1977,
ISO 2230, or
DIN 9088

The standards give several recommendations for the storage and the shelf life of elastomers, depending on the material classes.

The following recommendations are based on the several standards and are intended to provide the most suitable conditions for storage of rubbers. They should be observed to maintain the optimum physical and chemical values of the parts:

Heat

The storage temperature should preferable be between +5 °C and +25 °C. Direct contact with sources of heat such as boilers, radiators and direct sunlight should be avoided. If the storage temperature is below +15 °C, care should be taken to avoid distorting them during handling at that temperature as they may have stiffened. In this case the temperature of the articles should be raised to approximately +20 °C before they are put into service.

Humidity

The relative humidity in the store room should be below 70 %. Very moist or very dry conditions should be avoided. Condensation should not occur.

Light

Elastomeric seals should be protected from light sources, in particular direct sunlight or strong artificial light with an ultraviolet content. The individual storage bags offer the best protection as long as they are UV resistant. It is advisable to cover any windows of storage rooms with a red or orange coating or screen.

Radiation

Precaution should be taken to protect stored articles from all sources of ionising radiation likely to cause damage to stored articles.

Oxygen and ozone

Where possible, elastomeric materials should be protected from circulating air by wrapping, storage in airtight containers or by other suitable means.

As ozone is particular deleterious to some elastomeric seals, storage rooms should not contain any equipment that is capable of generating ozone, such as mercury vapour lamps, high voltage electrical equipment, electric motors or other equipment which may give rise to electric sparks or silent electrical discharges. Combustion gases and organic vapour should be excluded from storage rooms alas they may give rise to ozone via photochemical processe

Deformation

Elastomeric materials should, wherever possible, be stored in a relaxed condition free from tension, compression or other deformation. Where articles are packed in a strain-free condition they should be stored in their original packaging.

Contact with liquid and semi-solid materials

Elastomeric seals should not be allowed to come into contact with solvents, oils, greases or any other semi-solid materials at any time during storage, unless so packed by the manufacturer.

Contact with metal and non-metals

Direct contact with certain metals, e.g. manganese, iron and particularly copper and its alloys, e.g. brass and compounds of these materials are known to have deleterious effects on some rubbers. Elastomeric seals should not be stored in contact with such metals.

Because of possible transfer of plasticisers or other ingredients, rubbers must not be stored in contact with PVC. Different rubbers should preferably be separated from each other.

Cleaning

Where necessary, cleaning should be carried out with the aid of soap and water or methylated spirits. Water should not, however, be permitted to come into contact with fabric reinforced components, bonded seals (because of corrosion) or polyurethane rubbers. Disinfectants or other organic solvents as well as sharp-edged objects must not be used. The articles should be dried at room temperature and not placed near a source of heat.

Shelf life and shelf life control

The useful life of a elastomeric seals will depend to a large extend on the type of rubber. When stored under the recommended conditions (above sections) the below given shelf life of several materials should be considered.

AU, Thermoplastics	4 years
NBR, HNBR, CR	6 years
EPDM	8 years
FKM, VMQ, FVMQ	10 years
FFKM, Isolast®	18 years
PTFE, Turcon®	unlimited

Elastomeric seals should be inspected after the given period. After this giving an extension period is possible.

Rubber details and components less than 1.5 mm thick are liable to be more seriously affected by oxidation degradation even when stored in satisfactory conditions as recommended. Therefore they may be inspected and tested more frequently than it is mentioned above.

Rubber details / seals in assembled components

It is recommended that the units should be exercised at least every six months and that the maximum period a rubber detail be allowed to remain assembled within a stored unit, without inspection, be a total of the initial period stated above and the extension period. Naturally this will depend on the design of the unit concerned.

Turcon® Stepseal® 2K

Single Acting

Rubber Energized Plastic Faced Seal

Material:
Turcon® and Zurcon®

■ Turcon® Stepseal® 2K*

Description

Rod seals must exhibit no dynamic leakage to the atmosphere side under all operating conditions and must be statically completely leak tight when the machine is at a standstill. Furthermore, they should achieve a high degree of mechanical efficiency through low friction and be easy to install in small grooves. Costs and service life must meet the high expectations of the operator.

The rod seal Turcon® Stepseal® 2K comes closest to satisfying these ideal demands. Since the first Stepseal® was patented and introduced to the market in 1972, Trelleborg Sealing Solutions has maintained the series as technically outstanding seal elements through continuous innovative further development of the design and of the Turcon® and Zurcon® materials. Turcon® Stepseal® 2K continues the tradition for improvement.

With the introduction of Stepseal® it was possible for the first time to arrange several seals, one behind the other, thus allowing statically and dynamically tight double-acting tandem seal configurations to be created, without any disturbing build-up of intermediate pressure. The single-acting seal element is made of high-grade Turcon® or Zurcon® materials with outstanding sliding and wear resistance properties. It is installed according to ISO 7425/2 and Trelleborg Sealing Solutions standard grooves, using an O-Ring as energizing element.

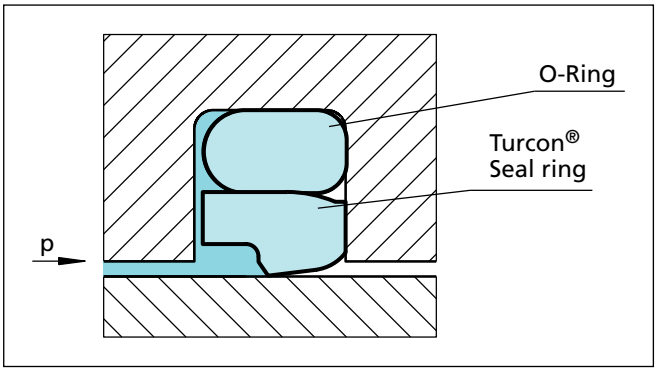

Figure 16 Turcon® Stepseal® 2K

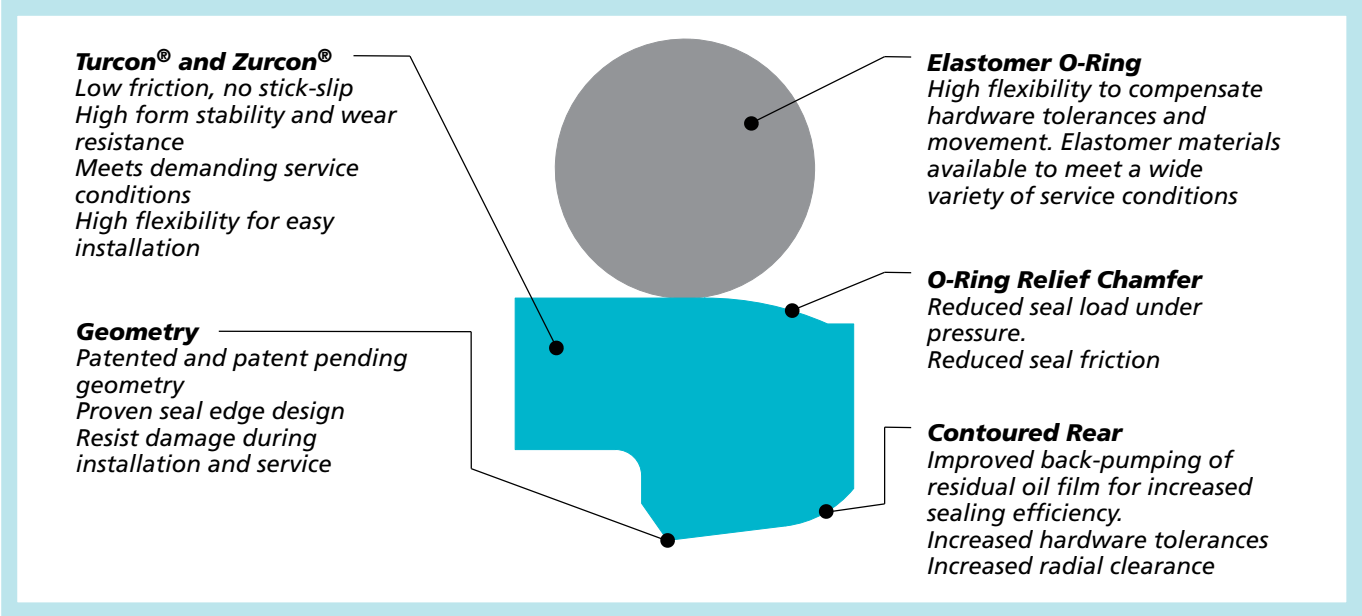

* Patented and patent pending geometry

Method of operation

The sealing performance of Stepseal® 2K (Figure 16) results from the hydrodynamic properties of the seal. The classic Stepseal® seal edge creates a steep contact pressure gradient on the high pressure side and a shallow contact pressure gradient on the low pressure side. The controlled pressure gradients minimizes fluid adherence to the piston rod during the extending stroke, and enables residual fluid film on the rod to be returned into the system on the return stroke. This is united with new patented and patent applied design features which further improve the performance of Stepseal® 2K under severe service conditions.

The O-Ring relief chamfer reduces pressure loading on the seal, whereby contact with the rod is optimised and sealing performance is improved at high service pressures. The special high-lift rear chamfer combines a smooth downstream sealing face with the ability to meet large radial clearances and hardware tolerances.

Stepseal® 2K gives high static and dynamic sealing performance, and the build-up of intermediate pressure often found with tandem seal configurations (see Figure 17) is efficiently suppressed.

Increased Clearance

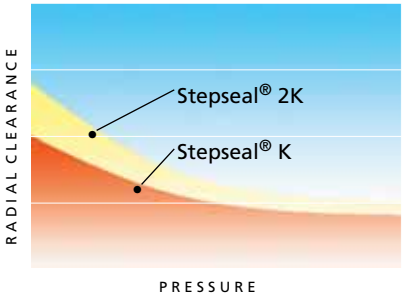

Turcon® Stepseal® 2K possesses superior extrusion resistance under all service conditions and allows hardware clearance to be significantly increased.

Improved Friction Performance

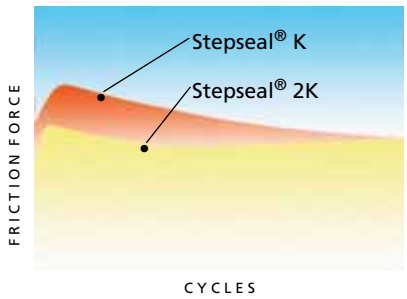

Turcon® Stepseal® 2K offers a uniform, low-friction characteristic, throughout its life, including the run in period.

Advantages

- High static and dynamic sealing effect
- High extrusion resistance, meets high hardware clearances
- Low friction, high efficiency
- Stick-slip free starting, no sticking
- High abrasion resistance, high operational reliability
- Wide range of application temperatures and high resistance to chemicals, depending on the choice of O-Ring material
- Simple installation without seal edge deformation
- Available for all diameters up to 2.600 mm rod dia.

Technical data

Operating conditions:

Pressure:	Up to 60 MPa
Speed:	Up to 15 m/s with reciprocating movements, frequency up to 5 Hz
Temperature:	-45 °C to +200 °C (depending on O-Ring material)
Media:	Mineral oil-based hydraulic fluids, flame retardant hydraulic fluids, environmentally safe hydraulic fluids (bio-oils), phosphate ester, water and others, depending on the O-Ring material compatibility (see Table XI)
Clearance:	The maximum permissible radial clearance S_{max} is shown in Table XII, as a function of the operating pressure and functional diameter.

Important Note:
The above data are maximum values and cannot be used at the same time. e.g. the maximum operating speed depends on material type, pressure, temperature and gap value. Temperature range also dependent on medium.

Materials

The following material combinations have proven effective for hydraulic applications:

All round material for hydraulic applications with reciprocating, short stroke or helical movements in mineral oils, flame retardant hydraulic fluids HFC, phosphate ester, bio-oils or fluids having less satisfactory lubricating properties:

Turcon® Stepseal® 2K:	Turcon® M12	
O-Ring:	NBR, 70 Shore A	N
	FKM, 70 Shore A	V
Set code:	M12N or M12V	

For medium to heavy applications with reciprocating movements in mineral oils and other media with good lubrication:

Turcon® Stepseal® 2K:	Turcon® T46	
O-Ring:	NBR, 70 Shore A	N
	FKM, 70 Shore A	V
Set code:	T46N or T46V	

For specific applications, all Turcon® materials are available.

Other viable material combinations are listed in Table XI.

Series

Different cross-section sizes are recommended as a function of the seal diameters.

Table XII, shows the relationship between the series number according to the seal diameter range and the different application class sizes. These application classes are:

Standard application:	General applications in which no exceptional operating conditions exist.
Light application:	Applications with demands for reduced friction or for smaller grooves.
Heavy-duty application:	For exceptional operating loads such as high pressures, pressure peaks, etc.

Table X Available range

Series No.	Rod Diameter d_N f8/h9
RSK00	2.0 - 130.0
RSK10	6.0 - 250.0
RSK20	10.0 - 450.0
RSK30	12.0 - 650.0
RSK40	38.0 - 650.0
RSK80	200.0 - 999.9
RSK50	256.0 - 999.9
RSK5X	1000.0 - 1200.0
RSK60	650.0 - 999.9
RSK6X	1000.0 - 2600.0

For the recommended range see Table XII.

Application Examples

- Mobile hydraulic
- Construction Equipment
- Mining
- Standard cylinders
- Machine tools
- Injection moulding machines
- Presses
- Clamp cylinders
- Wind Turbines
- Automobile industry
- Shock absorbers
- Hydraulic hammers
- Servo hydraulics

Redundant Sealing System

In many applications, secondary seal systems are demanded. Figure 17 shows such a tandem configuration with the Stepseal® 2K.

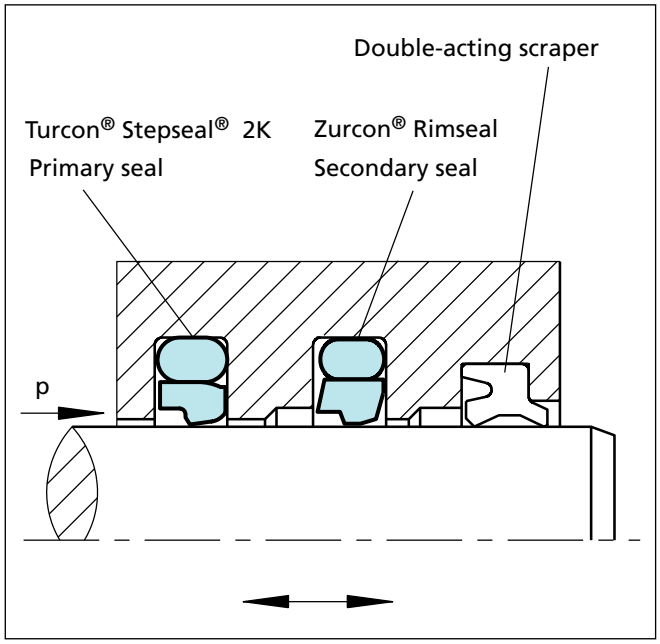

Figure 17 Turcon® Stepseal® 2K and Zurcon® Rimseal in tandem configuration

In this configuration it must be noted that a sufficiently large space is formed between the seals to take the hydraulic fluid, as shown in the figure.

Depending on the application and the operating conditions, the combination of different materials offers a further improvement in the sealing efficiency and the service life of the system, e.g. in hydraulic cylinders subject to high loads and under rough operating conditions, the primary seal should be made of Turcon® and the secondary seal of Zurcon® .

Stepseal® 2K elements should always be used in combination with a double-acting scraper to provide an optimum sealing effect.

The scraper Turcon® Excluder® 2, Turcon® Excluder® 5, Turcon® Excluder® F, Zurcon® Excluder® 500, DA17, DA22 and DA24 are well suited to such applications. For further details, please refer to our "Scrapers" catalogue.

Table XI Turcon® and Zurcon® Materials for Stepseal® 2K

Material, Applications, Properties	Code	O–Ring Material Shore A	Code	O-Ring Operating Temp.*°C	Mating Surface Material	MPa max. Dynamic
Turcon® M12 First material choice for seals in linear motion Overall improved properties For new constructions and updating For all commonly applied hydraulic fluids including fluids with low lubrication performance Lowest friction and best sliding properties Lowest wear on seals Improved absorption of abrasive contaminants No wear or abrasion of counter surface Mineral fibre and Additives filled Colour: Dark grey	M12	NBR- 70	N	-30 to +100	Steel Steel hardened Steel chrome plated (rod) Steel plated (rod) Cast iron Stainless steel Titanium	50
		NBR- Low temp.	T	-45 to +80		
		FKM- 70	V	-10 to +200		
Turcon® T05 For lubricating fluids Also for gas service Very low friction Very good sliding and sealing properties Colour: Turquoise	T05	NBR- 70	N	-30 to +100	Steel Steel hardened Steel chrome plated (rod)	20
		NBR- 70 Low temp.	T	-45 to +80		
		FKM- 70	V	-10 to +200		
Turcon® T08 For lubricating fluids and linear motion Very high compressive strength and extrusion resistance Hard counter surfaces is recommended Bronze filled Colour: Light to dark brown, which may have variations in shading	T08	NBR- 70	N	-30 to +100	Steel hardened Steel chrome plated (rod) Cast iron	60
		NBR- 70 Low temp.	T	-45 to +80		
		FKM- 70	V	-10 to +200		
Turcon® T10 For hydraulic and pneumatic For lubricating and non-lubricating fluids High extrusion resistance Good chemical resistance Not for electrically conducting fluids BAM tested Carbon, graphite filled Colour: Black	T10	NBR- 70	N	-30 to +100	Steel Steel hardened Steel chrome plated (rod) Stainless steel	40
		NBR- 70 Low temp.	T	-45 to +80		
		FKM- 70	V	-10 to +200		
		EPDM- 70	E**	-45 to +145		
Turcon® T29 For lubricating and non-lubricating fluids Good extrusion resistance Surface texture is not suitable for gas sealing Not for electrically conducting fluids Carbon fibre filled Colour: Grey	T29	NBR- 70	N	-30 to +100	Steel Steel hardened Steel chrome plated (rod) Cast iron Stainless steel	30
		NBR- 70 Low temp.	T	-45 to +80		
		FKM- 70	V	-10 to +200		
		EPDM- 70	E**	-45 to +145		
Turcon® T40 For lubricating and non-lubricating fluids High frequency and short strokes **Water hydraulics** Surface texture is not suitable for gas sealing Carbon fibre filled Colour: Grey.	T40	NBR- 70	N	-30 to +100	Steel Steel hardened Steel chrome plated (rod) Cast iron Stainless steel Aluminium	25
		NBR- 70 Low temp.	T	-45 to +80		
		FKM- 70	V	-10 to +200		
		EPDM- 70	E**	-45 to +145		

* The O-Ring Operation Temperature is only valid in mineral hydraulic oil (except EPDM). ** Material not suitable for mineral oils. *** Max. ø 2200 BAM: Tested by "Bundesanstalt Materialprüfung, Germany". Highlighted materials are standard.

Material, Applications, Properties	Code	O–Ring Material Shore A	Code	O-Ring Operating Temp.*°C	Mating Surface Material	MPa max. Dynamic
Turcon® T46 For lubricated hydraulics in linear motion High compressive strength High extrusion resistance Very good sliding and wear properties BAM tested Bronze filled Colour: Light to dark brown, which may have variations in shading.	T46	NBR- 70	N	-30 to +100	Steel hardened Steel chrome plated (rod) Cast iron	50
		NBR- 70 Low temp.	T	-45 to +80		
		FKM- 70	V	-10 to +200		
Zurcon® Z51*** For mineral oil based fluids **Very high abrasion and extrusion resistance** For counter surface with rougher surface finish Limited chemical resistance Max. working temperature 110 °C Cast polyurethane Colour: Yellow to light-brown.	Z51	NBR- 70	N	-30 to +100	Steel Steel hardened Steel chrome plated (rod) Cast iron Stainless steel Ceramic coating	60
		NBR- 70 Low temp.	T	-45 to +80		
Zurcon® Z80 For lubricating and non-lubricating fluids Water based fluids, air and gases Dry air pneumatics High abrasion and extrusion resistance For service in abrasive conditions and media with particles Good chemical resistance Limited temperature capability (-60 to +80 °C) UHMWPE (Ultra High Molecular Weight Polyethylene) Colour: White to off-white.	Z80	NBR- 70	N	-30 to +(100)	Steel Steel hardened Steel chrome plated (rod) Stainless steel Aluminium Ceramic coating	35
		NBR- 70 Low temp.	T	-45 to +80		
		EPDM- 70	E**	-45 to(+145)		

* The O-Ring Operation Temperature is only valid in mineral hydraulic oil (except EPDM). ** Material not suitable for mineral oils. *** Max. ø 2200 BAM: Tested by "Bundesanstalt Materialprüfung, Germany". Highlighted materials are standard.

■ Installation Recommendation

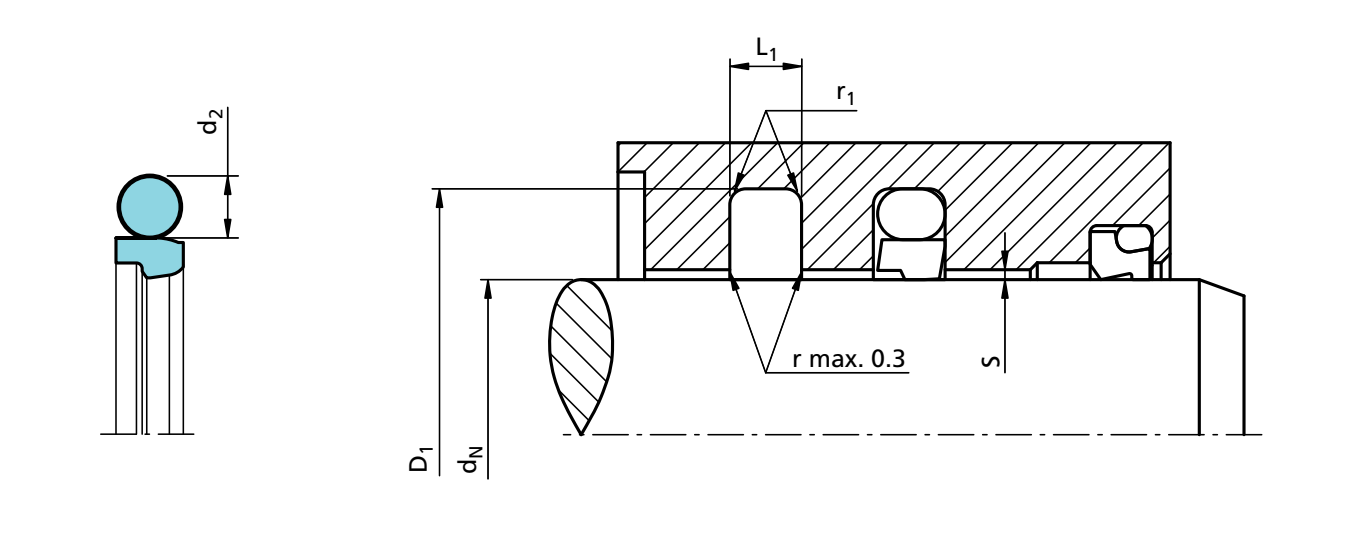

Figure 18 Installation drawing

Table XII Installation dimensions - Standard recommendations

Series No.	Rod Diameter d_N f8/h9			Groove Diameter	Groove Width	Radius	Radial Clearance S max. *			O-Ring Cross-Section
	Standard Application	Light[1] Application	Heavy Duty Application	D_1 H9	L_1 +0.2	r_1	10 MPa	20 MPa	40 MPa	d_2
RSK0	3 - 7.9	8 - 18.9	-	d_N + 4.9	2.2	0.4	0.30	0.20	0.15	1.78
RSK1	8 - 18.9	19 - 37.9	-	d_N + 7.3	3.2	0.6	0.40	0.25	0.15	2.62
RSK2	19 - 37.9	38 - 199.9	8 - 18.9	d_N + 10.7	4.2	1.0	0.50	0.30	0.20	3.53
RSK3	38 - 199.9	200 - 255.9	19 - 37.9	d_N + 15.1	6.3	1.3	0.70	0.40	0.25	5.33
RSK4	200 - 255.9	256 - 649.9	38 - 199.9	d_N + 20.5	8.1	1.8	0.80	0.60	0.35	7.00
RSK8	256 - 649.9	650 - 999.9	200 - 255.9	d_N + 24.0	8.1	1.8	0.90	0.70	0.40	7.00
RSK5	650 - 999.9	1000 - 1200	256 - 649.9	d_N + 27.3	9.5	2.5	1.00	0.80	0.50	8.40
RSK6	≥ 1000 **	-	650 - 999.9	d_N + 38.0	13.8	3.0	1.20	0.90	0.60	12.00

* At pressures > **40 MPa:** Use diameter tolerance H8/f8 (bore/rod) in the area behind the seal; or consult TSS for alternative material or profiles. TSS Slydring®/Wear Rings are not applicable at very small radial clearance; please consult the Slydring® catalog.

** All O-Rings with 12 mm cross section are delivered as a special profile ring.

[1] For easier installation in closed grooves with small rod diameters (< 40 mm).

Ordering example

Turcon® Stepseal® 2K complete with O-Ring, standard application, Series RSK4 (from Table XII).

Rod diameter: d_N = 250.0 mm
TSS Part No.: RSK402500 (from Table XIII)

Select the material from Table XI. The corresponding code numbers are appended to the TSS Part No. (from Table XIII). Together these form the TSS Article Number. The TSS Article Number for all intermediate sizes not shown in Table XIII can be determined following the example below.
** For diameters ≥ 1000.0 mm multiply only by factor 1.
Example: RSK6 for diameter 1200.0 mm. TSS Article No.: RSK6**X1200** -M12N.

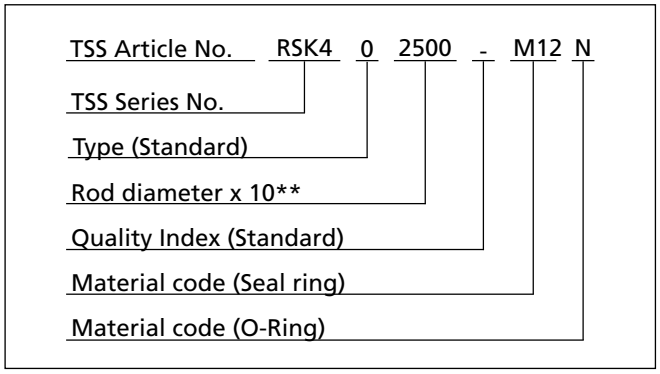

Table XIII Installation dimensions / TSS Part No.

Rod	Groove Diameter	Groove Width	TSS Part No.	O-Ring Size
d_N f8/h9	D_1 H9	L_1 +0.2		
3.0	7.9	2.2	RSK000030	4.47 x 1.78
4.0	**8.9**	2.2	**RSK000040**	**5.6 x 1.8**
5.0	**9.9**	2.2	**RSK000050**	**6.7 x 1.8**
6.0	**10.9**	**2.2**	**RSK000060**	**7.65 x 1.78**
7.0	11.9	2.2	RSK000070	8.75 x 1.8
8.0	**12.9**	**2.2**	**RSK000080**	**9.5 x 1.8**
8.0	**15.3**	**3.2**	**RSK100080**	**10.77 x 2.62**
9.0	13.9	2.2	RSK000090	10.82 x 1.78
9.0	16.3	3.2	RSK100090	10.77 x 2.62
10.0	**14.9**	**2.2**	**RSK000100**	**11.8 x 1.8**
10.0	**17.3**	**3.2**	**RSK100100**	**12.37 x 2.62**
12.0	**16.9**	**2.2**	**RSK000120**	**14.00 x 1.78**
12.0	**19.3**	**3.2**	**RSK100120**	**13.94 x 2.62**
12.7	17.6	2.2	RSK000127	14.00 x 1.78
12.7	20.0	3.2	RSK100127	15.54 x 2.62
14.0	**18.9**	**2.2**	**RSK000140**	**15.60 x 1.78**
14.0	**21.3**	**3.2**	**RSK100140**	**17.12 x 2.62**
15.0	19.9	2.2	RSK000150	17.17 x 1.78
15.0	22.3	3.2	RSK100150	17.12 x 2.62
16.0	20.9	2.2	RSK000160	17.17 x 1.78
16.0	**23.3**	**3.2**	**RSK100160**	**18.72 x 2.62**
17.0	21.9	2.2	RSK000170	18.77 x 1.78
18.0	22.9	2.2	RSK000180	18.77 x 1.78
18.0	**25.3**	**3.2**	**RSK100180**	**20.29 x 2.62**

The rod diameters in **bold** type are in accordance with the recommendations of ISO 3320.
Other dimensions and all intermediate sizes up to 2600 mm diameter including imperial (inch) sizes can be supplied.
All O-Rings with 12 mm cross section are delivered as special profilring.

Rod	Groove Diameter	Groove Width	TSS Part No.	O-Ring Size
d_N f8/h9	D_1 H9	L_1 +0.2		
19.0	29.7	4.2	RSK200190	23.40 x 3.53
20.0	**27.3**	**3.2**	**RSK100200**	**21.89 x 2.62**
20.0	**30.7**	**4.2**	**RSK200200**	**23.40 x 3.53**
22.0	**29.3**	**3.2**	**RSK100220**	**25.07 x 2.62**
22.0	**32.7**	**4.2**	**RSK200220**	**26.58 x 3.53**
24.0	31.3	3.2	RSK100240	26.64 x 2.62
25.0	**32.3**	**3.2**	**RSK100250**	**28.24 x 2.62**
25.0	**35.7**	**4.2**	**RSK200250**	**29.75 x 3.53**
25.4	32.7	3.2	RSK100254	28.24 x 2.62
25.4	36.1	4.2	RSK200254	29.75 x 3.53
26.0	33.3	3.2	RSK100260	28.24 x 2.62
26.0	36.7	4.2	RSK200260	29.75 x 3.53
28.0	35.3	3.2	RSK100280	29.82 x 2.62
28.0	**38.7**	**4.2**	**RSK200280**	**32.92 x 3.53**
28.575	35.875	3.2	RSK100286	31.42 x 2.62
30.0	37.3	3.2	RSK100300	32.99 x 2.62
30.0	40.7	4.2	RSK200300	34.52 x 3.53
32.0	39.3	3.2	RSK100320	34.59 x 2.62
32.0	**42.7**	**4.2**	**RSK200320**	**36.09 x 3.53**
35.0	42.3	3.2	RSK100350	37.77 x 2.62
35.0	45.7	4.2	RSK200350	37.69 x 3.53
36.0	43.3	3.2	RSK100360	39.34 x 2.62
36.0	**46.7**	**4.2**	**RSK200360**	**40.87 x 3.53**
37.0	44.3	3.2	RSK100370	39.34 x 2.62
37.0	47.7	4.2	RSK200370	40.87 x 3.53
38.0	48.7	4.2	RSK200380	40.87 x 3.53
38.0	53.1	6.3	RSK300380	43.82 x 5.33
40.0	**50.7**	**4.2**	**RSK200400**	**44.04 x 3.53**
40.0	**55.1**	**6.3**	**RSK300400**	**43.82 x 5.33**
42.0	52.7	4.2	RSK200420	47.22 x 3.53
42.0	57.1	6.3	RSK300420	46.99 x 5.33
43.0	53.7	4.2	RSK200430	47.22 x 3.53
44.45	59.55	6.3	RSK300444	50.17 x 5.33
45.0	**55.7**	**4.2**	**RSK200450**	**50.39 x 3.53**
45.0	**60.1**	**6.3**	**RSK300450**	**50.17 x 5.33**
48.0	58.7	4.2	RSK200480	51.5 x 3.55

The rod diameters in **bold** type are in accordance with the recommendations of ISO 3320.
Other dimensions and all intermediate sizes up to 2600 mm diameter including imperial (inch) sizes can be supplied.
All O-Rings with 12 mm cross section are delivered as special profilring.

Rod	Groove Diameter	Groove Width	TSS Part No.	O-Ring Size
d_N f8/h9	D_1 H9	L_1 +0.2		
48.0	63.1	6.3	RSK300480	53.34 x 5.33
50.0	**60.7**	**4.2**	**RSK200500**	**53.57 x 3.53**
50.0	**65.1**	**6.3**	**RSK300500**	**56.52 x 5.33**
50.8	61.5	4.2	RSK200508	53.57 x 3.53
50.8	65.9	6.3	RSK300508	56.52 x 5.33
52.0	62.7	4.2	RSK200520	56.74 x 3.53
52.0	67.1	6.3	RSK300520	56.52 x 5.33
54.0	69.1	6.3	RSK300540	59.69 x 5.33
55.0	65.7	4.2	RSK200550	59.92 x 3.53
55.0	70.1	6.3	RSK300550	59.69 x 5.33
56.0	**66.7**	**4.2**	**RSK200560**	**59.92 x 3.53**
56.0	**71.1**	**6.3**	**RSK300560**	**62.87 x 5.33**
56.0	76.5	8.1	RSK400560	63 x 7.0
57.0	72.1	6.3	RSK300570	62.87 x 5.33
59.0	69.7	4.2	RSK200590	63.09 x 3.53
60.0	70.7	4.2	RSK200600	63.09 x 3.53
60.0	75.1	6.3	RSK300600	66.04 x 5.33
63.0	**73.7**	**4.2**	**RSK200630**	**66.27 x 3.53**
63.0	**78.1**	**6.3**	**RSK300630**	**69.22 x 5.33**
63.5	78.6	6.3	RSK300635	69.22 x 5.33
65.0	75.7	4.2	RSK200650	69.44 x 3.53
65.0	80.1	6.3	RSK300650	69.22 x 5.33
67.0	77.7	4.2	RSK200670	72.62 x 3.53
69.0	84.1	6.3	RSK300690	75.57 x 5.33
70.0	80.7	4.2	RSK200700	75.79 x 3.53
70.0	**85.1**	**6.3**	**RSK300700**	**75.57 x 5.33**
70.0	90.5	8.1	RSK400700	78 x 7.0
72.0	82.7	4.2	RSK200720	75.79 x 3.53
73.0	88.1	6.3	RSK300730	78.74 x 5.33
75.0	85.7	4.2	RSK200750	78.97 x 3.53
75.0	90.1	6.3	RSK300750	81.92 x 5.33
76.2	91.3	6.3	RSK300762	81.92 x 5.33
78.0	93.1	6.3	RSK300780	85.09 x 5.33
80.0	90.7	4.2	RSK200800	85.32 x 3.53
80.0	**95.1**	**6.3**	**RSK300800**	**85.09 x 5.33**
80.0	100.5	8.1	RSK400800	88 x 7.0

The rod diameters in **bold** type are in accordance with the recommendations of ISO 3320.
Other dimensions and all intermediate sizes up to 2600 mm diameter including imperial (inch) sizes can be supplied.
All O-Rings with 12 mm cross section are delivered as special profilring.

Rod	Groove Diameter	Groove Width	TSS Part No.	O-Ring Size
d_N f8/h9	D_1 H9	L_1 +0.2		
82.5	97.6	6.3	RSK300825	88.27 x 5.33
83.0	93.7	4.2	RSK200830	88.49 x 3.53
85.0	95.7	4.2	RSK200850	88.49 x 3.53
85.0	100.1	6.3	RSK300850	91.44 x 5.33
85.0	105.5	8.1	RSK400850	93 x 7.0
89.0	104.1	6.3	RSK300890	94.62 x 5.33
90.0	100.7	4.2	RSK200900	94.84 x 3.53
90.0	**105.1**	**6.3**	**RSK300900**	**94.62 x 5.33**
90.0	110.5	8.1	RSK400900	98 x 7.0
92.0	102.7	4.2	RSK200920	98.02 x 3.53
92.0	107.1	6.3	RSK300920	97.79 x 5.33
95.0	105.7	4.2	RSK200950	101.19 x 3.53
95.0	110.1	6.3	RSK300950	100.97 x 5.33
100.0	110.7	4.2	RSK201000	104.37 x 3.53
100.0	**115.1**	**6.3**	**RSK301000**	**107.32 x 5.33**
100.0	120.5	8.1	RSK401000	108 x 7.0
101.6	116.7	6.3	RSK301016	107.32 x 5.33
104.7	119.8	6.3	RSK301047	110.49 x 5.33
105.0	120.1	6.3	RSK301050	110.49 x 5.33
105.0	125.5	8.1	RSK401050	113.67 x 7.0
110.0	120.7	4.2	RSK201100	113.89 x 3.53
110.0	**125.1**	**6.3**	**RSK301100**	**116.84 x 5.33**
110.0	130.5	8.1	RSK401100	116.84 x 7.0
115.0	130.1	6.3	RSK301150	120.02 x 5.33
120.0	135.1	6.3	RSK301200	126.37 x 5.33
120.0	145.5	8.1	RSK401200	129.54 x 7.0
125.0	**140.1**	**6.3**	**RSK301250**	**129.54 x 5.33**
125.0	145.5	8.1	RSK401250	132.72 x 7.0
125.4	140.5	6.3	RSK301254	132.72 x 5.33
127.0	142.1	6.3	RSK301270	132.72 x 5.33
130.0	145.1	6.3	RSK301300	135.89 x 5.33
130.0	150.5	8.1	RSK401300	139.07 x 7.0
132.0	147.1	6.3	RSK301320	139.07 x 5.33
135.0	145.7	4.2	RSK201350	139.29 x 3.53
135.0	150.1	6.3	RSK301350	142.24 x 5.33
137.0	152.1	6.3	RSK301370	142.24 x 5.33

The rod diameters in **bold** type are in accordance with the recommendations of ISO 3320.
Other dimensions and all intermediate sizes up to 2600 mm diameter including imperial (inch) sizes can be supplied.
All O-Rings with 12 mm cross section are delivered as special profilring.

Rod	Groove Diameter	Groove Width	TSS Part No.	O-Ring Size
d_N f8/h9	D_1 H9	L_1 +0.2		
138.0	153.1	6.3	RSK301380	142.24 x 5.33
140.0	150.7	4.2	RSK201400	145.64 x 3.53
140.0	**155.1**	**6.3**	**RSK301400**	**145.42 x 5.33**
140.0	160.5	8.1	RSK401400	148.59 x 7.0
140.5	155.6	6.3	RSK301405	145.42 x 5.33
145.0	160.1	6.3	RSK301450	151.77 x 5.33
145.0	165.5	8.1	RSK401450	151.77 x 7.0
150.0	165.1	6.3	RSK301500	158.12 x 5.33
150.0	170.5	8.1	RSK401500	158.12 x 7.0
153.0	168.1	6.3	RSK301530	158.12 x 5.33
155.0	170.1	6.3	RSK301550	158.12 x 5.33
160.0	**175.1**	**6.3**	**RSK301600**	**164.47 x 5.33**
160.0	**180.5**	**8.1**	**RSK401600**	**170.82 x 7.0**
165.0	180.1	6.3	RSK301650	170.82 x 5.33
170.0	185.1	6.3	RSK301700	177.17 x 5.33
170.0	190.5	8.1	RSK401700	177.17 x 7.0
173.0	188.1	6.3	RSK301730	177.17 x 5.33
175.0	190.1	6.3	RSK301750	183.52 x 5.33
180.0	**195.1**	**6.3**	**RSK301800**	**183.52 x 5.33**
180.0	**200.5**	**8.1**	**RSK401800**	**189.87 x 7.0**
185.0	200.1	6.3	RSK301850	189.87 x 5.33
185.0	205.5	8.1	RSK401850	196.22 x 7.0
190.0	205.1	6.3	RSK301900	196.22 x 5.33
190.0	210.5	8.1	RSK401900	196.22 x 7.0
195.0	210.1	6.3	RSK301950	202.57 x 5.33
200.0	215.1	6.3	RSK302000	208.92 x 5.33
200.0	**220.5**	**8.1**	**RSK402000**	**208.92 x 7.0**
205.0	225.5	8.1	RSK402050	215.27 x 7.0
210.0	230.5	8.1	RSK402100	215.27 x 7.0
211.0	231.5	8.1	RSK402110	215.27 x 7.0
212.0	232.5	8.1	RSK402120	227.97 x 7.0
215.0	235.5	8.1	RSK402150	227.97 x 7.0
220.0	**240.5**	**8.1**	**RSK402200**	**227.97 x 7.0**
225.0	245.5	8.1	RSK402250	240.67 x 7.0
230.0	245.1	6.3	RSK302300	234.32 x 5.33
230.0	250.5	8.1	RSK402300	240.67 x 7.0

The rod diameters in **bold** type are in accordance with the recommendations of ISO 3320.
Other dimensions and all intermediate sizes up to 2600 mm diameter including imperial (inch) sizes can be supplied.
All O-Rings with 12 mm cross section are delivered as special profilring.

Rod	Groove Diameter	Groove Width	TSS Part No.	O-Ring Size
d_N f8/h9	D_1 H9	L_1 +0.2		
235.0	255.5	8.1	RSK402350	240.67 x 7.0
240.0	260.5	8.1	RSK402400	253.37 x 7.0
245.0	265.5	8.1	RSK402450	253.37 x 7.0
250.0	**270.5**	**8.1**	**RSK402500**	**266.07 x 7.0**
260.0	284.0	8.1	RSK802600	266.07 x 7.0
265.0	289.0	8.1	RSK802650	278.77 x 7.0
270.0	290.5	8.1	RSK402700	278.77 x 7.0
270.0	294.0	8.1	RSK802700	278.77 x 7.0
275.0	299.0	8.1	RSK802750	291.47 x 7.0
280.0	**304.0**	**8.1**	**RSK802800**	**291.47 x 7.0**
285.0	309.0	8.1	RSK802850	291.47 x 7.0
290.0	314.0	8.1	RSK802900	304.17 x 7.0
295.0	319.0	8.1	RSK802950	304.17 x 7.0
300.0	320.5	8.1	RSK403000	304.17 x 7.0
300.0	324.0	8.1	RSK803000	316.87 x 7.0
310.0	334.0	8.1	RSK803100	316.87 x 7.0
320.0	**344.0**	**8.1**	**RSK803200**	**329.57 x 7.0**
330.0	354.0	8.1	RSK803300	342.27 x 7.0
340.0	364.0	8.1	RSK803400	354.97 x 7.0
350.0	370.5	8.1	RSK403500	354.97 x 7.0
350.0	374.0	8.1	RSK803500	367.67 x 7.0
360.0	**384.0**	**8.1**	**RSK803600**	**367.67 x 7.0**
365.0	389.0	8.1	RSK803650	380.37 x 7.0
370.0	394.0	8.1	RSK803700	380.37 x 7.0
375.0	399.0	8.1	RSK803750	393.07 x 7.0
380.0	404.0	8.1	RSK803800	393.07 x 7.0
390.0	414.0	8.1	RSK803900	405.26 x 7.0
400.0	424.0	8.1	RSK804000	417.96 x 7.0
410.0	434.0	8.1	RSK804100	417.96 x 7.0
420.0	444.0	8.1	RSK804200	430.66 x 7.0
430.0	454.0	8.1	RSK804300	443.36 x 7.0
435.0	459.0	8.1	RSK804350	443.36 x 7.0
440.0	464.0	8.1	RSK804400	456.06 x 7.0
450.0	474.0	8.1	RSK804500	468.76 x 7.0
460.0	484.0	8.1	RSK804600	468.76 x 7.0
470.0	494.0	8.1	RSK804700	481.46 x 7.0

The rod diameters in **bold** type are in accordance with the recommendations of ISO 3320.
Other dimensions and all intermediate sizes up to 2600 mm diameter including imperial (inch) sizes can be supplied.
All O-Rings with 12 mm cross section are delivered as special profilring.

Rod	Groove Diameter	Groove Width	TSS Part No.	O-Ring Size
d_N f8/h9	D_1 H9	L_1 +0.2		
480.0	504.0	8.1	RSK804800	494.16 x 7.0
485.0	509.0	8.1	RSK804850	494.16 x 7.0
490.0	514.0	8.1	RSK804900	506.86 x 7.0
500.0	524.0	8.1	RSK805000	506.86 x 7.0
510.0	534.0	8.1	RSK805100	532.26 x 7.0
520.0	544.0	8.1	RSK805200	532.26 x 7.0
525.0	549.0	8.1	RSK805250	532.26 x 7.0
530.0	554.0	8.1	RSK805300	557.66 x 7.0
540.0	564.0	8.1	RSK805400	557.66 x 7.0
550.0	574.0	8.1	RSK805500	557.66 x 7.0
560.0	584.0	8.1	RSK805600	582.68 x 7.0
570.0	594.0	8.1	RSK805700	582.68 x 7.0
580.0	604.0	8.1	RSK805800	608.08 x 7.0
585.0	609.0	8.1	RSK805850	608.08 x 7.0
590.0	614.0	8.1	RSK805900	608.08 x 7.0
600.0	624.0	8.1	RSK806000	608.08 x 7.0
610.0	634.0	8.1	RSK806100	633.48 x 7.0
620.0	644.0	8.1	RSK806200	633.48 x 7.0
630.0	654.0	8.1	RSK806300	658.88 x 7.0
640.0	664.0	8.1	RSK806400	658.88 x 7.0
650.0	677.3	9.5	RSK506500	663 x 8.4
656.0	683.3	9.5	RSK506560	669 x 8.4
660.0	687.3	9.5	RSK506600	673 x 8.4
680.0	707.3	9.5	RSK506800	693 x 8.4
685.0	712.3	9.5	RSK506850	698 x 8.4
700.0	724.0	8.1	RSK807000	712 x 7.0
700.0	727.3	9.5	RSK507000	713 x 8.4
710.0	737.3	9.5	RSK507100	723 x 8.4
730.0	757.3	9.5	RSK507300	743 x 8.4
760.0	787.3	9.5	RSK507600	773 x 8.4
765.0	792.3	9.5	RSK507650	778 x 8.4
780.0	807.3	9.5	RSK507800	793 x 8.4
790.0	817.3	9.5	RSK507900	803 x 8.4
800.0	827.3	9.5	RSK508000	813 x 8.4
810.0	837.3	9.5	RSK508100	823 x 8.4
820.0	847.3	9.5	RSK508200	833 x 8.4

The rod diameters in **bold** type are in accordance with the recommendations of ISO 3320.
Other dimensions and all intermediate sizes up to 2600 mm diameter including imperial (inch) sizes can be supplied.
All O-Rings with 12 mm cross section are delivered as special profilring.

Rod	Groove Diameter	Groove Width	TSS Part No.	O-Ring Size
d_N f8/h9	D_1 H9	L_1 +0.2		
830.0	857.3	9.5	RSK508300	843 x 8.4
850.0	877.3	9.5	RSK508500	863 x 8.4
870.0	897.3	9.5	RSK508700	883 x 8.4
880.0	907.3	9.5	RSK508800	893 x 8.4
885.0	912.3	9.5	RSK508850	898 x 8.4
890.0	917.3	9.5	RSK508900	903 x 8.4
930.0	957.3	9.5	RSK509300	943 x 8.4
955.0	982.3	9.5	RSK509550	968 x 8.4
1000.0	1038.0	13.8	RSK6X1000	1016 x 12
1035.0	1073.0	13.8	RSK6X1035	1051 x 12
1040.0	1067.3	9.5	RSK5X1040	1053 x 8.4
1040.0	1078.0	13.8	RSK6X1040	1056 x 12
1050.0	1077.3	9.5	RSK5X1050	1063 x 8.4
1050.0	1088.0	13.8	RSK6X1050	1066 x 12
1100.0	1138.0	13.8	RSK6X1100	1116 x 12
1120.0	1147.3	9.5	RSK5X1120	1133 x 8.4
1120.0	1158.0	13.8	RSK6X1120	1136 x 12
1200.0	1227.3	9.5	RSK5X1200	1213 x 8.4
1200.0	1238.0	13.8	RSK6X1200	1216 x 12
1330.0	1368.0	13.8	RSK6X1330	1346 x 12
1500.0	1538.0	13.8	RSK6X1500	1516 x 12
1600.0	1638.0	13.8	RSK6X1600	1616 x 12
2000.0	2038.0	13.8	RSK6X2000	2016 x 12
2600.0	2638.0	13.8	RSK6X2600	2616 x 12

The rod diameters in **bold** type are in accordance with the recommendations of ISO 3320.
Other dimensions and all intermediate sizes up to 2600 mm diameter including imperial (inch) sizes can be supplied.
All O-Rings with 12 mm cross section are delivered as special profilring.

■ Installation according to ISO 7425, Part 2

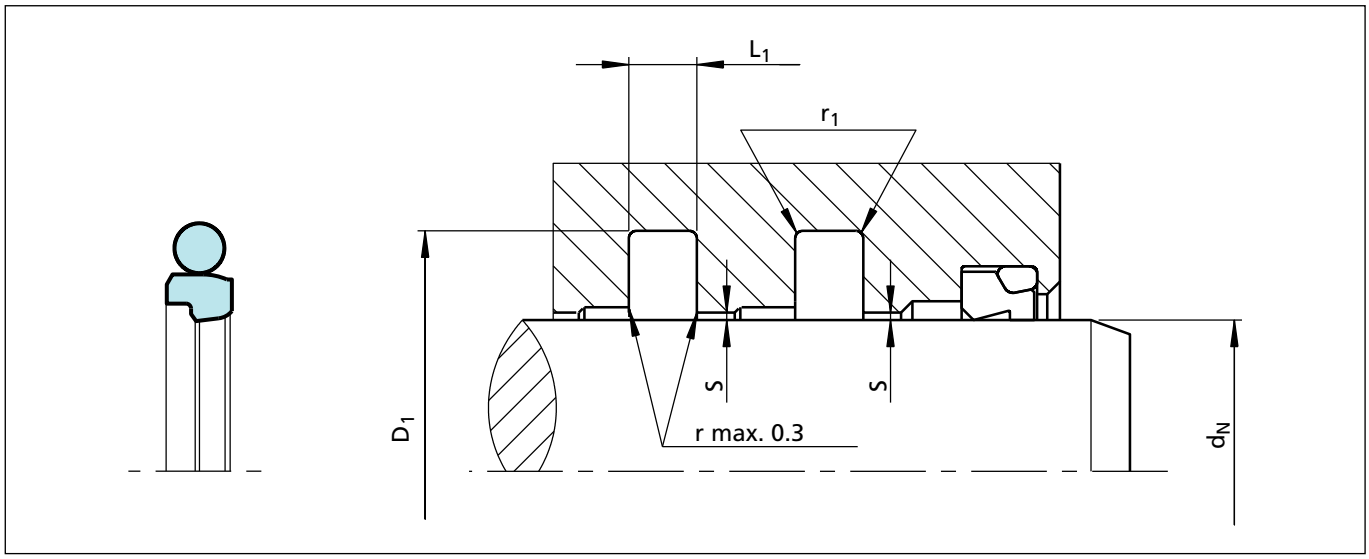

Figure 19 Installation drawing

Dimensions to ISO 7425/2.

Turcon® Stepseal® 2K seals to fit grooves to ISO 7425/2 are additionally marked with a chamfer on the corner of the outside diameter.

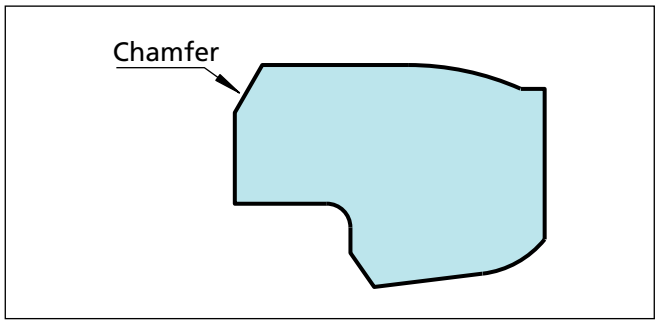

Figure 20 Marking of the ISO version

The dimensions for clearance S, depending on seal dimensions (groove width) and pressure, can be taken from Table XII.

For dimensions d_N, D_1 and L_1 please refer to Table XV.

Technical data, recommendations and material selection as per the standard version.

Table XIV ISO standard series

Series No.	Available for Rod Sizes	Rod Dia. ISO Std.	Radial Depth ISO Std.	Axial Width ISO Std.	Groove Dia. Tol. ISO Std.	Groove Radius ISO Std.
		f8		+0.25/-0		
RSKA	6 - 130	6 - 14	2.50	2.2	ø6 - ø100 (H9) ø110 - ø360 (H8)	ø6 - ø63 (r1=0.5) ø63 - ø360 (r1=0.9)
RSKB	10 - 245	12 - 25	3.75	3.2	ø6 - ø100 (H9) ø110 - ø360 (H8)	ø6 - ø63 (r1=0.5) ø63 - ø360 (r1=0.9)
RSKC	19 - 455	20 - 63	5.50	4.2	ø6 - ø100 (H9) ø110 - ø360 (H8)	ø6 - ø63 (r1=0.5) ø63 - ø360 (r1=0.9)
RSKD	38 - 655	56 - 180	7.75	6.3	ø6 - ø100 (H9) ø110 - ø360 (H8)	ø6 - ø63 (r1=0.5) ø63 - ø360 (r1=0.9)
RSKE	120 - 655	160 - 250	10.50	8.1	ø6 - ø100 (H9) ø110 - ø360 (H8)	ø6 - ø63 (r1=0.5) ø63 - ø360 (r1=0.9)
RSKF	200 - 655	280 - 360	12.25	8.1	ø6 - ø100 (H9) ø110 - ø360 (H8)	ø6 - ø63 (r1=0.5) ø63 - ø360 (r1=0.9)

Ordering example

Turcon® Stepseal® 2K to ISO 7425/2

Rod diameter: d_N = 63.0 mm
Groove width: L_1 = 4.2 mm
TSS Part No. RSKC00630

Select the material from Table XI. The corresponding code numbers are appended to the TSS Part No. (from Table XV). Together these form the TSS Article Number.

TSS Article No. RSKC 0 0630 - M12 N

- TSS Series No.
- Type (Standard)
- Rod diameter x 10
- Quality Index (Standard)
- Material code (Seal ring)
- Material code (O-Ring)

Table XV Installation dimensions to ISO 7425/2 / TSS Part No.

Rod	Groove Diameter	Groove Width	r_1	TSS Part No.	O-Ring Size
d_N f8/h9	D_1 H9	L_1 +0.25			
6.0	11.0	2.2	0.5	RSKA00060	7.65 x 1.78
8.0	13.0	2.2	0.5	RSKA00080	9.5 x 1.8
10.0	15.0	2.2	0.5	RSKA00100	11.8 x 1.8
12.0	17.0	2.2	0.5	RSKA00120	14.0 x 1.78
12.0	19.5	3.2	0.5	RSKB00120	13.94 x 2.62
14.0	19.0	2.2	0.5	RSKA00140	15.60 x 1.78
14.0	21.5	3.2	0.5	RSKB00140	17.12 x 2.62
16.0	23.5	3.2	0.5	RSKB00160	18.72 x 2.62
18.0	25.5	3.2	0.5	RSKB00180	20.29 x 2.62
20.0	27.5	3.2	0.5	RSKB00200	23.47 x 2.62
20.0	31.0	4.2	0.5	RSKC00200	25.00 x 3.53
22.0	29.5	3.2	0.5	RSKB00220	25.07 x 2.62
22.0	33.0	4.2	0.5	RSKC00220	26.58 x 3.53
25.0	32.5	3.2	0.5	RSKB00250	28.24 x 2.62
25.0	36.0	4.2	0.5	RSKC00250	29.75 x 3.53
28.0	39.0	4.2	0.5	RSKC00280	32.92 x 3.53
32.0	43.0	4.2	0.5	RSKC00320	36.09 x 3.53
36.0	47.0	4.2	0.5	RSKC00360	40.87 x 3.53
40.0	51.0	4.2	0.5	RSKC00400	44.04 x 3.53
45.0	56.0	4.2	0.5	RSKC00450	50.39 x 3.53
50.0	61.0	4.2	0.5	RSKC00500	53.57 x 3.53
56.0	67.0	4.2	0.5	RSKC00560	59.92 x 3.53
56.0	71.5	6.3	0.9	RSKD00560	62.87 x 5.33
63.0	74.0	4.2	0.5	RSKC00630	66.27 x 3.53
63.0	78.5	6.3	0.9	RSKD00630	69.22 x 5.33
70.0	85.5	6.3	0.9	RSKD00700	75.57 x 5.33
80.0	95.5	6.3	0.9	RSKD00800	85.09 x 5.33
90.0	105.5	6.3	0.9	RSKD00900	94.62 x 5.33
100.0	115.5	6.3	0.9	RSKD01000	107.32 x 5.33
110.0	125.5	6.3	0.9	RSKD01100	116.84 x 5.33
125.0	140.5	6.3	0.9	RSKD01250	132.72 x 5.33
140.0	155.5	6.3	0.9	RSKD01400	145.42 x 5.33
160.0	175.5	6.3	0.9	RSKD01600	164.47 x 5.33
160.0	181.0	8.1	0.9	RSKE01600	170.82 x 7.0
180.0	195.5	6.3	0.9	RSKD01800	189.87 x 5.33
180.0	201.0	8.1	0.9	RSKE01800	189.87 x 7.0
200.0	221.0	8.1	0.9	RSKE02000	208.92 x 7.0
220.0	241.0	8.1	0.9	RSKE02200	227.97 x 7.0
250.0	271.0	8.1	0.9	RSKE02500	266.07 x 7.0
280.0	304.5	8.1	0.9	RSKF02800	291.47 x 7.0
320.0	344.5	8.1	0.9	RSKF03200	329.57 x 7.0
360.0	384.5	8.1	0.9	RSKF03600	367.67 x 7.0

Above table only includes ISO rod diameters.

Other dimensions and all intermediate sizes up to 2600 mm diameter including imperial (inch) sizes can be supplied.

Turcon® Stepseal® V

Single Acting

Rubber Energized Plastic Faced Seal

Material:
Turcon® and Zurcon®

■ Turcon® Stepseal® V

Characteristics

- Primary seal with hydrostatic ventilation
- Check valve function
- Hydrodynamic back-pumping
- Stabilised position in the groove
- Fits existing Turcon® Stepseal® groove
- Available for ISO 7425/2 groove
- Prolonged seal life
- Increased leakage control

Improved Friction Performance

Turcon® Stepseal® V offers a uniform, low friction characteristic of the sealing system, throughout its whole life, by preventing undefined pressurisation of the secondary seal element.

Features

Stepseal® V has been developed to meet the continuously increasing demands to the sealing systems. In dynamic applications Stepseal® V brings efficient, reliable sealing performance under even the most demanding service conditions. The high seal efficiency and refined valve function of Stepseal® V eliminates seal system pressure build-up between tandem rod seal configuration and makes buffer volume between the seals a thing of the past.

Stepseal® V is a new generation primary seal designed for use in seal systems. In rod seal systems, Stepseal® V is preferably used together with a secondary seal from the range of Turcon® and Zurcon® rod seals, or with only a double-acting Excluder® or Scraper.

Applied as a piston seal, Stepseal® V is used with a doubleacting seal from the Turcon® range of piston seals. Under extreme performance requirements Stepseal® V offers improved leakage control, extended service life and increased reliability.

Elastomer O-Ring
High flexibility to satisfy hardware tolerances and movement.
Elastomer materials available to meet a wide variety of service conditions.
Pressure Relief Valve Function.

Notch
Ensures rapid pressure actuation and pressure balancing under all service conditions.

Stabilizing Edge
Prevents seal deformation under the most demanding service conditions. Increases assembly robustness through protection of the seal face during insertion of the rod. Scraping edge preventing contamination to be embedded into the sealing lip.

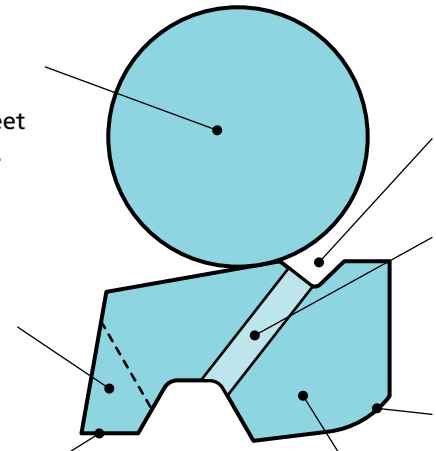

Machined Valve Groove
Ensures precise opening and closing of the relief channel. Provides robust performance of the relief function independently of hardware deflection.

Patented Hydrostatic Pressure Relief Channel
Prevents pressure trap between seals under all service conditions. Prolongs life of sealing system.

Contoured Rear Chamfer for
Hydrodynamic Back-pumping
Improved back-pumping of residual oil film for increased sealing efficiency.
Increased radial clearance.

Turcon® and Zurcon® Material
Low friction, no stick-slip. High sealing efficiency and long service life.
Meets demanding service conditions.
High flexibility for easy installation.

Description

Stepseal® V is based on the dynamic, unidirectional Stepseal® sealing concept. During the extending stroke of the rod, focusing of contact force on the unique Stepseal® sealing edge creates high local sealing pressure and limits the micro fluid film formation under the seal. When the rod is retracted, the design of the full Stepseal® sealing face supports hydrodynamic back-pumping of the fluid film, and so ensures leak-free sealing efficiency with low friction and long service life.

In long-stroke cylinders, and equipment operating with low speed during retraction, it has been found that hydrodynamic back-pumping may become insufficient to prevent build-up of pressure in the seal system behind the primary seal. Pressure build-up in the seal system leads to leakage, increased friction and wear, and may ultimately require replacement of the seals. The usual precaution in such equipment has been to provide space for a buffer volume behind the primary seal, or to install a drain line.

First invented and patented by Trelleborg Sealing Solutions, the built-in check valve function promised to eliminate pressure build-up and so render buffer volumes and drain lines obsolete. Extensive development has now brought the inherent prevention of pressure build-up together with dependable sealing performance in one element; Turcon® Stepseal® V.

Stepseal® V has the efficient seal performance and outstanding service life of the Stepseal® range, and the reliable prevention of pressure build-up brought by a refined check valve function.

Stepseal® V is available in high-grade Turcon® or Zurcon® materials with outstanding sliding and wear resistance properties. It is installed in Trelleborg Sealing Solutions standard grooves and according to ISO 7425, using an O-Ring as energising element.

* Patented and patent pending geometry:
DE 9654357; 24. 2. 996

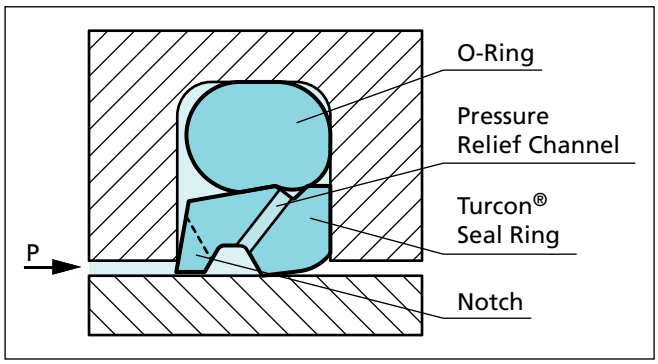

Figure 21 Turcon® Stepseal® V with tight axial groove fit

Method of operation

The sealing performance of the patented Stepseal® V design – see Figure 21 – results from a combination of the hydrodynamic properties of the seal and the O-Ring and the hydrostatic pressure relief check valve function.

The classic Stepseal® operation ensures a controlled pressure gradient that minimizes fluid adherence to the piston rod during the extending stroke, and enables residual fluid film on the rod to be returned into the system on the return stroke.

The O-Ring check valve function controls the operation of the pressure relief channel: When the seal is pressurised by the system pressure the O-Ring keeps the channel closed to ensure that the hydraulic fluid is not passing through the channel and further between the groove wall and the Turcon® Seal Ring.

If pressure, higher than the actual system pressure, appears between the Stepseal® V and the secondary seal, the O-Ring is opening the relief groove somewhere at the circumference and the inter-seal pressure is immediately relieved. Due to the circumferential groove with integrated relief hole the relief function is independent from side load and deflection of the seal or O-Ring.

These patented design features further improve the performance of the Stepseal® concept at all service conditions. Besides giving high static and dynamic sealing performance, the Stepseal® V secures that build-up of intermediate pressure, which can be found with tandem seal configurations, is non-existent, regardless of the pressure, speed, deflection and rod movements.

Advantages:

- Same basic function as Turcon® Stepseal® 2K
- Check valve function of O-Ring eliminates risk of fluid bypassing the seal during pressure loading when pressurised
- No system pressure on secondary sealing element and/ or Excluder®
- Independent of any speed relation of counter surface
- Independent of stroke length
- Independent of deflection
- Minimum contribution of friction of secondary sealing element and/or Excluder®
- Minimum wear of secondary sealing element and/or Excluder®
- Increased leakage control
- Prolonged seal life
- Increased operational reliability
- Fits standard Turcon® Stepseal® 2K groove dimensions as well as ISO 7425 seal housings

Technical data

Operating conditions:

Pressure:	Up to 50 MPa (Turcon® M12) Up to 60 MPa (Turcon® T08 and Zurcon® Z51)
Speed:	Up to 15 m/s with linear movements, frequency up to 15 Hz
Temperature:	-45 °C to +200 °C (depending on seal and O-Ring material)
Media:	Mineral oil based hydraulic fluids, flame retardant hydraulic fluids, environmentally safe hydraulic fluids (plant based oils), phosphate ester, water and others, depending on the seal and O-Ring material - see Table XVII.
Clearance:	The maximum permissible radial clearance Smax is shown in Table XVIII, as a function of the operating pressure and functional diameter.

Important Note:
The above data are maximum values and cannot be used at the same time. e.g. the maximum operating speed depends on material type, pressure, temperature and gap value.

Materials

The following material combinations have proven effective for hydraulic applications:

All round material for hydraulic applications with reciprocating, short stroke or helical movements in mineral oils, flame retardant hydraulic fluids HFC, phospate ester, bio-oils or fluids having less satisfactory lubricating properties:

Turcon® Stepseal® V:	Turcon® M12	
O-Ring:	NBR, 70 Shore A	N
	FKM, 70 Shore A	V
Set code:	M12N or M12V	

For medium to heavy applications with reciprocating movements in mineral oils and other media with good lubrication.

Turcon® Stepseal® V:	Turcon® T46	
O-Ring:	NBR, 70 Shore A	N
	FKM, 70 Shore A	V
Set code:	T46N or T46V	

For specific applications, all Turcon® materials are available. Other viable material combinations are listed in Table XVII.

Installation Instructions

Stepseal® V is preferably installed in closed grooves according to Figure 6 and 7 plus Table VI on page 12.

Series

Different cross-section sizes are recommended as a function of the seal diameters

Table XVI, shows the relationship between the series number according to the seal diameter range and the different application class sizes. These application classes are:

Standard application:	General applications in which no exceptional operating conditions exist.
Light application:	Applications with demands for reduced friction or for smaller grooves.
Heavy-duty application:	For exceptional operating loads such as high pressures, pressure peaks, etc.

Table XVI Available range

Series No.	Rod Diameter d_N f8/h9
RSV20	12.0 - 455.0
RSV30	12.0 - 655.0
RSV40	38.0 - 655.0
RSV80	140.0 - 999.9
RSV50	160.0 - 999.9
RSV5X	1000.0 - 1200.0
RSV60	650.0 - 999.9
RSV6X	1000.0 - 2600.0

For the recommended range see Table XVIII.

Application Examples

- Mobile hydraulic
- Construction equipment
- Crane boom cylinders
- Presses
- Injection molding machines
- Clamp cylinders
- Wind power cylinders
- Long stroke cylinders
- Waterpower cylinders
- Watergate cylinders
- Tensioner Cylinders
- Theater hydraulics

Redundant Sealing System

In many applications, secondary seal systems are demanded. Figure 22 shows such a tandem configuration with the Stepseal® V.

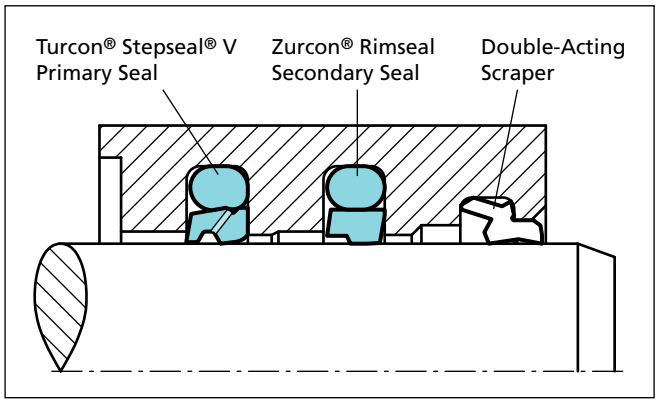

Figure 22 Turcon® Stepseal® V and Zurcon® Rimseal in tandem configuration

When utilizing Stepseal® V, with valve function, there will be no pressure trap between the primary and secondary seals and no extra space between them is required to accumulate hydraulic fluid.

Depending on the application and the operating conditions, the combination of different materials offers a further improvement in the sealing efficiency and the service life of the system, e.g. in hydraulic cylinders subject to high loads and under rough operating conditions, the primary seal should be made of Turcon® and the secondary seal of Zurcon®.

Table XVII Turcon® and Zurcon® Materials for Stepseal® V

Material, Applications, Properties	Code	O–Ring Material Shore A	Code	O-Ring Operating Temp.* °C	Mating Surface Material	MPa max. Dyna-mic
Turcon® M12 First material choice for seals in linear motion Overall improved properties For new constructions and updating For all commonly applied hydraulic fluids including fluids with low lubrication performance Lowest friction and best sliding properties Lowest wear on seals Improved absorption of abrasive contaminants No wear or abrasion of counter surface Mineral fibre and Additvies filled Colour: Dark grey	M12	NBR- 70	N	-30 to +100	Steel Steel hardened Steel chrome plated (rod) Steel plated (rod) Cast iron Stainless steel Titanium	50
		NBR- 70 Low temp.	T	-45 to +80		
		FKM- 70	V	-10 to +200		
Turcon® T05 For lubricating fluids Also for gas service Very low friction Very good sliding and sealing properties Colour: Turquoise	T05	NBR- 70	N	-30 to +100	Steel Steel hardened Steel chrome plated (rod)	20
		NBR- 70 Low temp.	T	-45 to +80		
		FKM- 70	V	-10 to +200		
Turcon® T08 For lubricating fluids and linear motion Very high compressive strength and extrusion resistance Hard counter surfaces is recommended Bronze filled Colour: Light to dark brown, which may have variations in shading	T08	NBR- 70	N	-30 to +100	Steel hardened Steel chrome plated (rod) Cast iron	60
		NBR- 70 Low temp.	T	-45 to +80		
		FKM- 70	V	-10 to +200		
Turcon® T10 For hydraulic and pneumatic For lubricating and non-lubricating fluids High extrusion resistance Good chemical resistance Not for electrically conducting fluids BAM tested Carbon, graphite filled Colour: Black	T10	NBR- 70	N	-30 to +100	Steel Steel hardened Steel chrome plated (rod) Stainless steel	40
		NBR- 70 Low temp.	T	-45 to +80		
		FKM- 70	V	-10 to +200		
		EPDM- 70	E**	-45 to +145		
Turcon® T29 For lubricating and non-lubricating fluids Good extrusion resistance Surface texture is not suitable for gas sealing Not for electrically conducting fluids Carbon fibre filled Colour: Grey	T29	NBR- 70	N	-30 to +100	Steel Steel hardened Steel chrome plated (rod) Cast iron Stainless steel	30
		NBR- 70 Low temp.	T	-45 to +80		
		FKM- 70	V	-10 to +200		
		EPDM- 70	E**	-45 to +145		
Turcon® T40 For lubricating and non-lubricating fluids High frequency and short strokes **Water hydraulics** Surface texture is not suitable for gas sealing Carbon fibre filled Colour: Grey.	T40	NBR- 70	N	-30 to +100	Steel Steel hardened Steel chrome plated (rod) Cast iron Stainless steel Aluminium	25
		NBR- 70 Low temp.	T	-45 to +80		
		FKM- 70	V	-10 to +200		
		EPDM- 70	E**	-45 to +145		

* The O-Ring Operation Temperature is only valid in mineral hydraulic oil (except EPDM). ** Material not suitable for mineral oils.
BAM: Tested by "Bundesanstalt Materialprüfung, Germany". Highlighted materials are standard.

Material, Applications, Properties	Code	O–Ring Material Shore A	Code	O-Ring Operating Temp.* °C	Mating Surface Material	MPa max. Dyna-mic
Turcon® T46 For lubricated hydraulics in linear motion High compressive strength High extrusion resistance Very good sliding and wear properties BAM tested Bronze filled Colour: Light to dark brown, which may have variations in shading.	T46	NBR- 70	N	-30 to +100	Steel hardened Steel chrome plated (rod) Cast iron	50
		NBR- 70 Low temp.	T	-45 to +80		
		FKM- 70	V	-10 to +200		
Zurcon® Z51*** For mineral oil based fluids **Very high abrasion and extrusion resistance** For counter surface with rougher surface finish Limited chemical resistance Max. working temperature 110 °C Cast polyurethane Colour: Yellow to light-brown.	Z51	NBR- 70	N	-30 to +100	Steel Steel hardened Steel chrome plated (rod) Cast iron Stainless steel Ceramic coating	60
		NBR- 70 Low temp.	T	-45 to +80		
Zurcon® Z80 For lubricating and non-lubricating fluids Water based fluids, air and gases Dry air pneumatics High abrasion and extrusion resistance For service in abrasive conditions and media with particles Good chemical resistance Limited temperature capability (-60 to +80 °C) UHMWPE (Ultra High Molecular Weight Polyethylene) Colour: White to off-white.	Z80	NBR- 70	N	-30 to +100	Steel Steel hardened Steel chrome plated (rod) Stainless steel Aluminium Ceramic coating	35
		NBR- 70 Low temp.	T	-45 to +80		
		EPDM- 70	E**	-45 to(+145)		

* The O-Ring Operation Temperature is only valid in mineral hydraulic oil (except EPDM). ** Material not suitable for mineral oils.
BAM: Tested by "Bundesanstalt Materialprüfung, Germany". Highlighted materials are standard.

■ Installation Recommendation

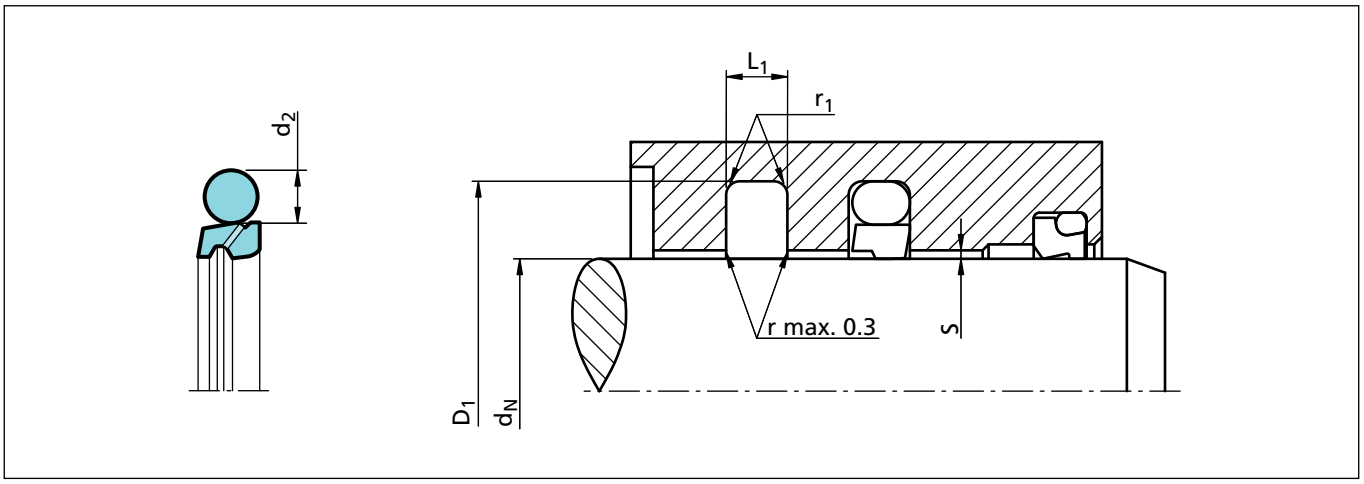

Figure 23 Installation drawing

Table XVIII Installation dimensions – Standard recommendations

Series No.	Rod Diameter d_N f8/h9			Groove Diameter	Groove Width	Radius	Radial Clearance Smax *			O-Ring Cross-Section
	Standard Application	Light Application	Heavy Duty Application	D_1 H9	L_1 +0.2	r_1	10 MPa	20 MPa	40 MPa	d_2
RSV2	12.0 - 37.9	38.0 - 199.9	-	d_N + 10.7	4.2	1.0	0.50	0.30	0.20	3.53
RSV3	38.0 - 199.9	200.0 - 255.9	19.0 - 37.9	d_N + 15.1	6.3	1.3	0.70	0.40	0.25	5.33
RSV4	200.0 - 255.9	256.0 - 649.9	38.0 - 199.9	d_N + 20.5	8.1	1.8	0.80	0.60	0.35	7.00
RSV8	256.0 - 649.9	650.0 - 999.9	200.0 - 255.9	d_N + 24.0	8.1	1.8	0.90	0.70	0.40	7.00
RSV5	650.0 - 999.9	1000 - 1200	256.0 - 649.9	d_N + 27.3	9.5	2.5	1.00	0.80	0.50	8.40
RSV6	≥1000 **	-	650.0 - 999.9	d_N + 38.0	13.8	3.0	1.20	0.90	0.60	12.00

* At pressures > 40 MPa: Use diameter tolerance H8/f8 (bore/ rod) in the area behind the seal; or consult TSS for alternative material or profiles. TSS Slydring®/Wear Rings are not applicable at very small radial clearance; please consult the Slydring® catalog.

** All O-Rings with 12 mm cross section are delivered as special profile ring.

Ordering example

Turcon® Stepseal® V complete with O-Ring, standard application;

Series: RSV4 (from Table XVIII)
Rod diameter: dN = 250.0 mm
TSS Part No.: RSV402500 (from Table XIX)

Select the material from Table XVII.

The corresponding code numbers are appended to the TSS Part No. Together these form the TSS Article Number.

The TSS Article Number for all intermediate sizes not shown in Table XIX can be determined following the example.

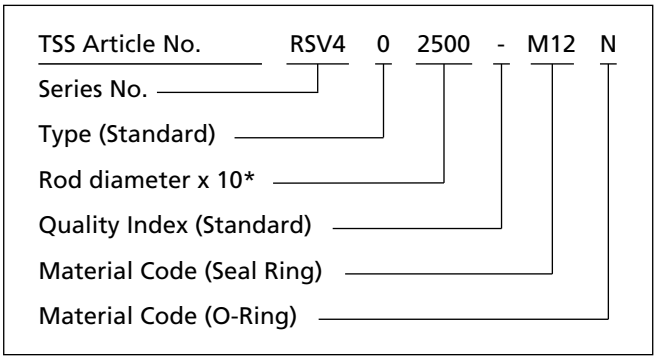

* For diameters ≥1000.0 mm multiply only by factor 1.
Example: RSV6 for diameter 1200.0 mm.
TSS Article No.: RSV6**X1200** - M12

Table XIX Installation dimensions / Part No.

Rod d_N f8/h9	Groove Dia. D_1 H9	Groove Width L_1 +0.2	TSS Part No.	O-Ring Dimension
12.0	**22.7**	**4.2**	**RSV200120**	**17.04 x 3.53**
15.0	25.7	4.2	RSV200150	18.66 x 3.53
19.0	29.7	4.2	RSV200190	23.40 x 3.53
20.0	**30.7**	**4.2**	**RSV200200**	**25.00 x 3.53**
22.0	**32.7**	**4.2**	**RSV200220**	**26.58 x 3.53**
25.0	**35.7**	**4.2**	**RSV200250**	**29.75 x 3.53**
25.4	36.1	4.2	RSV200254	29.75 x 3.53
26.0	36.7	4.2	RSV200260	29.75 x 3.53
28.0	**38.7**	**4.2**	**RSV200280**	**32.92 x 3.53**
30.0	40.7	4.2	RSV200300	34.52 x 3.53
32.0	**42.7**	**4.2**	**RSV200320**	**36.09 x 3.53**
35.0	45.7	4.2	RSV200350	37.69 x 3.53
36.0	**46.7**	4.2	RSV200360	40.87 x 3.53
37.0	47.7	4.2	RSV200370	40.87 x 3.53
38.0	48.7	4.2	RSV200380	40.87 x 3.53
38.0	53.1	6.3	RSV300380	43.82 x 5.33
40.0	**50.7**	**4.2**	**RSV200400**	**44.04 x 3.53**
40.0	**55.1**	**6.3**	**RSV300400**	**43.82 x 5.33**
42.0	52.7	4.2	RSV200420	47.22 x 3.53
42.0	57.1	6.3	RSV300420	46.99 x 5.33
43.0	53.7	4.2	RSV200430	47.22 x 3.53
44.45	59.5	6.3	RSV300444	50.17 x 5.33
45.0	55.7	4.2	RSV200450	50.39 x 3.53
45.0	60.1	6.3	RSV300450	50.17 x 5.33
48.0	58.7	4.2	RSV200480	53.57 x 3.53
48.0	63.1	6.3	RSV300480	53.34 x 5.33
50.0	**60.7**	**4.2**	**RSV200500**	**53.57 x 3.53**
50.0	**65.1**	**6.3**	**RSV300500**	**56.52 x 5.33**
50.8	61.5	4.2	RSV200508	53.57 x 3.53
50.8	65.9	6.3	RSV300508	56.52 x 5.33
52.0	62.7	4.2	RSV200520	56.74 x 3.53
52.0	67.1	6.3	RSV300520	56.52 x 5.33
54.0	69.1	6.3	RSV300540	59.69 x 5.33
55.0	65.7	4.2	RSV200550	59.92 x 3.53
55.0	70.1	6.3	RSV300550	59.69 x 5.33
56.0	**66.7**	**4.2**	**RSV200560**	**59.92 x 3.53**

Rod d_N f8/h9	Groove Dia. D_1 H9	Groove Width L_1 +0.2	TSS Part No.	O-Ring Dimension
56.0	**71.1**	**6.3**	**RSV300560**	**62.87 x 5.33**
57.0	72.1	6.3	RSV300570	62.87 x 5.33
59.0	69.7	4.2	RSV200590	63.09 x 3.53
60.0	70.7	4.2	RSV200600	63.09 x 3.53
60.0	75.1	6.3	RSV300600	66.04 x 5.33
63.0	**73.7**	**4.2**	**RSV200630**	66.**27** x 3.53
63.0	**78.1**	**6.3**	**RSV300630**	**69.22 x 5.33**
63.5	78.6	6.3	RSV300635	69.22 x 5.33
65.0	75.7	4.2	RSV200650	69.44 x 3.53
65.0	80.1	6.3	RSV300650	69.22 x 5.33
67.0	77.7	4.2	RSV200670	72.62 x 3.53
69.0	84.1	6.3	RSV300690	75.57 x 5.33
70.0	80.7	4.2	RSV200700	75.79 x 3.53
70.0	**85.1**	**6.3**	**RSV300700**	**75.57 x 5.33**
70.0	90.5	8.1	RSV400700	64.00 x 7.00
72.0	82.7	4.2	RSV200720	75.79 x 3.53
73.0	88.1	6.3	RSV300730	78.74 x 5.33
75.0	85.7	4.2	RSV200750	78.97 x 3.53
75.0	90.1	6.3	RSV300750	81.92 x 5.33
75.0	95.5	8.1	RSV400750	83.00 x 7.00
76.2	91.3	6.3	RSV300762	81.92 x 5.33
78.0	93.1	6.3	RSV300780	85.09 x 5.33
78.0	98.5	8.1	RSV400780	86.00 x 7.00
80.0	90.7	4.2	RSV200800	85.32 x 3.53
80.0	**95.1**	**6.3**	**RSV300800**	**85.09 x 5.33**
80.0	100.5	8.1	RSV400800	88.00 x 7.00
82.5	97.6	6.3	RSV300825	88.27 x 5.33
83.0	93.7	4.2	RSV200830	88.49 x 3.53
85.0	95.7	4.2	RSV200850	88.49 x 3.53
85.0	100.1	6.3	RSV300850	91.44 x 5.33
85.0	105.5	8.1	RSV400850	93.00 x 7.00
89.0	104.1	6.3	RSV300890	94.62 x 5.33
90.0	100.7	4.2	RSV200900	94.84 x 3.53
90.0	**105.1**	**6.3**	**RSV300900**	**94.62 x 5.33**
90.0	110.5	8.1	RSV400900	98.00 x 7.00
92.0	102.7	4.2	RSV200920	98.02 x 3.53

Rod d_N f8/h9	Groove Dia. D_1 H9	Groove Width L_1 +0.2	TSS Part No.	O-Ring Dimension
92.0	107.1	6.3	RSV300920	97.79 x 5.33
95.0	105.7	4.2	RSV200950	101.19 x 3.53
95.0	110.1	6.3	RSV300950	100.97 x 5.33
95.0	115.5	8.1	RSV400950	103.00 x 7.00
100.0	110.7	4.2	RSV201000	104.37 x 3.53
100.0	**115.1**	**6.3**	**RSV301000**	**107.32 x 5.33**
100.0	120.5	8.1	RSV401000	108.00 x 7.00
101.6	116.7	6.3	RSV301016	107.32 x 5.33
105.0	120.1	6.3	RSV301050	110.49 x 5.33
105.0	125.5	8.1	RSV401050	113.67 x 7.00
110.0	120.7	4.2	RSV201100	113.89 x 3.53
110.0	**125.1**	**6.3**	**RSV301100**	**116.84 x 5.33**
110.0	130.5	8.1	RSV401100	116.84 x 7.00
115.0	130.1	6.3	RSV301150	120.02 x 5.33
120.0	135.1	6.3	RSV301200	126.37 x 5.33
120.0	140.5	8.1	RSV401200	129.54 x 7.00
125.0	**140.1**	**6.3**	**RSV301250**	**129.54 x 5.33**
125.0	145.5	8.1	RSV401250	132.72 x 7.00
125.4	140.5	6.3	RSV301254	132.72 x 5.33
127.0	142.1	6.3	RSV301270	132.72 x 5.33
130.0	145.1	6.3	RSV301300	135.89 x 5.33
130.0	150.5	8.1	RSV401300	139.07 x 7.00
132.0	147.1	6.3	RSV301320	139.07 x 5.33
135.0	145.7	4.2	RSV201350	139.29 x 3.53
135.0	150.1	6.3	RSV301350	142.24 x 5.33
137.0	152.1	6.3	RSV301370	142.24 x 5.33
138.0	153.1	6.3	RSV301380	142.24 x 5.33
140.0	150.7	4.2	RSV201400	145.64 x 3.53
140.0	**155.1**	**6.3**	**RSV301400**	**145.42 x 5.33**
140.0	160.5	8.1	RSV401400	148.59 x 7.00
140.5	155.6	6.3	RSV301405	145.42 x 5.33
145.0	160.1	6.3	RSV301450	151.77 x 5.33
145.0	165.5	8.1	RSV401450	151.77 x 7.00
150.0	165.1	6.3	RSV301500	158.12 x 5.33
150.0	170.5	8.1	RSV401500	158.12 x 7.00
153.0	168.1	6.3	RSV301530	158.12 x 5.33

Rod d_N f8/h9	Groove Dia. D_1 H9	Groove Width L_1 +0.2	TSS Part No.	O-Ring Dimension
155.0	170.1	6.3	RSV301550	158.12 x 5.33
160.0	**175.1**	**6.3**	**RSV301600**	**164.47 x 5.33**
160.0	**180.5**	**8.1**	**RSV401600**	**170.82 x 7.00**
165.0	180.1	6.3	RSV301650	170.82 x 5.33
170.0	185.1	6.3	RSV301700	177.17 x 5.33
170.0	190.5	8.1	RSV401700	177.17 x 7.00
173.0	188.1	6.3	RSV301730	177.17 x 5.33
175.0	190.1	6.3	RSV301750	183.52 x 5.33
180.0	**195.1**	**6.3**	**RSV301800**	**183.52 x 5.33**
180.0	**200.5**	**8.1**	**RSV401800**	**189.87 x 7.00**
185.0	200.1	6.3	RSV301850	189.87 x 5.33
185.0	205.5	8.1	RSV401850	196.22 x 7.00
190.0	205.1	6.3	RSV301900	196.22 x 5.33
190.0	210.5	8.1	RSV401900	196.22 x 7.00
195.0	210.1	6.3	RSV301950	202.57 x 5.33
200.0	215.1	6.3	RSV302000	208.92 x 5.33
200.0	**220.5**	**8.1**	**RSV402000**	**208.90 x 7.00**
205.0	225.5	8.1	RSV402050	215.27 x 7.00
210.0	230.5	8.1	RSV402100	215.27 x 7.00
211.0	231.5	8.1	RSV402110	215.27 x 7.00
212.0	232.5	8.1	RSV402120	227.97 x 7.00
215.0	235.5	8.1	RSV402150	227.97 x 7.00
220.0	240.5	8.1	RSV402200	227.97 x 7.00
225.0	**245.5**	**8.1**	**RSV402250**	**240.67 x 7.00**
230.0	245.1	6.3	RSV302300	234.32 x 5.33
230.0	250.5	8.1	RSV402300	240.67 x 7.00
235.0	255.5	8.1	RSV402350	240.67 x 7.00
240.0	260.5	8.1	RSV402400	253.37 x 7.00
245.0	265.5	8.1	RSV402450	253.37 x 7.00
250.0	**270.5**	**8.1**	**RSV402500**	**266.07 x 7.00**
260.0	284.0	8.1	RSV802600	266.07 x 7.00
265.0	289.0	8.1	RSV802650	278.77 x 7.00
270.0	290.5	8.1	RSV402700	278.77 x 7.00
270.0	294.0	8.1	RSV802700	278.77 x 7.00
275.0	299.0	8.1	RSV802750	291.47 x 7.00
280.0	**304.0**	**8.1**	**RSV802800**	**291.47 x 7.00**

Rod d_N f8/h9	Groove Dia. D_1 H9	Groove Width L_1 +0.2	TSS Part No.	O-Ring Dimension
285.0	309.0	8.1	RSV802850	291.47 x 7.00
290.0	314.0	8.1	RSV802900	304.17 x 7.00
295.0	319.0	8.1	RSV802950	304.17 x 7.00
300.0	320.5	8.1	RSV403000	304.17 x 7.00
300.0	324.0	8.1	RSV803000	316.87 x 7.00
310.0	334.0	8.1	RSV803100	316.87 x 7.00
320.0	**344.0**	**8.1**	**RSV803200**	**329.57 x 7.00**
330.0	354.0	8.1	RSV803300	342.27 x 7.00
340.0	364.0	8.1	RSV803400	354.97 x 7.00
350.0	370.5	8.1	RSV403500	354.97 x 7.00
350.0	374.0	8.1	RSV803500	367.67 x 7.00
360.0	**384.0**	**8.1**	**RSV803600**	**367.67 x 7.00**
365.0	389.0	8.1	RSV803650	380.37 x 7.00
370.0	394.0	8.1	RSV803700	380.37 x 7.00
375.0	399.0	8.1	RSV803750	393.07 x 7.00
380.0	404.0	8.1	RSV803800	393.07 x 7.00
390.0	414.0	8.1	RSV803900	405.26 x 7.00
400.0	424.0	8.1	RSV804000	417.96 x 7.00
410.0	434.0	8.1	RSV804100	417.96 x 7.00
420.0	444.0	8.1	RSV804200	430.66 x 7.00
430.0	454.0	8.1	RSV804300	443.36 x 7.00
435.0	459.0	8.1	RSV804350	443.36 x 7.00
440.0	464.0	8.1	RSV804400	456.06 x 7.00
450.0	474.0	8.1	RSV804500	468.76 x 7.00
460.0	484.0	8.1	RSV804600	468.76 x 7.00
470.0	494.0	8.1	RSV804700	481.38 x 7.00
480.0	504.0	8.1	RSV804800	494.16 x 7.00
485.0	509.0	8.1	RSV804850	494.16 x 7.00
490.0	514.0	8.1	RSV804900	506.86 x 7.00
500.0	524.0	8.1	RSV805000	506.86 x 7.00
510.0	534.0	8.1	RSV805100	532.26 x 7.00
520.0	544.0	8.1	RSV805200	532.26 x 7.00
525.0	549.0	8.1	RSV805250	532.26 x 7.00
530.0	554.0	8.1	RSV805300	557.66 x 7.00
540.0	564.0	8.1	RSV805400	557.66 x 7.00
550.0	574.0	8.1	RSV805500	557.66 x 7.00

Rod d_N f8/h9	Groove Dia. D_1 H9	Groove Width L_1 +0.2	TSS Part No.	O-Ring Dimension
560.0	584.0	8.1	RSV805600	582.68 x 7.00
570.0	594.0	8.1	RSV805700	582.68 x 7.00
580.0	604.0	8.1	RSV805800	608.08 x 7.00
585.0	609.0	8.1	RSV805850	608.08 x 7.00
590.0	614.0	8.1	RSV805900	608.08 x 7.00
600.0	624.0	8.1	RSV806000	608.08 x 7.00
610.0	634.0	8.1	RSV806100	633.48 x 7.00
620.0	644.0	8.1	RSV806200	633.48 x 7.00
630.0	654.0	8.1	RSV806300	658.88 x 7.00
640.0	664.0	8.1	RSV806400	658.88 x 7.00
650.0	677.3	9.5	RSV506500	663 x 8.40
656.0	683.3	9.5	RSV506560	669 x 8.40
660.0	687.3	9.5	RSV506600	673 x 8.40
680.0	707.3	9.5	RSV506800	693 x 8.40
685.0	712.3	9.5	RSV506850	698 x 8.40
700.0	724.0	8.1	RSV807000	712 x 7.00
700.0	727.3	9.5	RSV507000	713 x 8.40
710.0	737.3	9.5	RSV507100	723 x 8.40
730.0	757.3	9.5	RSV507300	743 x 8.40
760.0	787.3	9.5	RSV507600	773 x 8.40
765.0	792.3	9.5	RSV507650	778 x 8.40
780.0	807.3	9.5	RSV507800	793 x 8.40
790.0	817.3	9.5	RSV507900	803 x 8.40
800.0	827.3	9.5	RSV508000	813 x 8.40
810.0	837.3	9.5	RSV508100	823 x 8.40
820.0	847.3	9.5	RSV508200	833 x 8.40
830.0	857.3	9.5	RSV508300	843 x 8.40
850.0	877.3	9.5	RSV508500	863 x 8.40
870.0	897.3	9.5	RSV508700	883 x 8.40
880.0	907.3	9.5	RSV508800	893 x 8.40
885.0	912.3	9.5	RSV508850	898 x 8.40
890.0	917.3	9.5	RSV508900	903 x 8.40
930.0	957.3	9.5	RSV509300	943 x 8.40
955.0	982.3	9.5	RSV509550	968 x 8.40
1000.0	1038.0	13.8	RSV6X1000	1016 x 12.00
1035.0	1073.0	13.8	RSV6X1035	1051 x 12.00

Rod	Groove Dia.	Groove Width	TSS Part No.	O-Ring Dimension
d_N f8/h9	D_1 H9	L_1 +0.2		
1040.0	1067.3	9.5	RSV5X1040	1053 x 8.40
1040.0	1078.0	13.8	RSV6X1040	1056 x 12.00
1050.0	1077.3	9.5	RSV5X1050	1063 x 8.40
1050.0	1088.0	13.8	RSV6X1050	1066 x 12.00
1100.0	1138.0	13.8	RSV6X1100	1116 x 12.00
1120.0	1147.3	9.5	RSV5X1120	1133 x 8.40
1120.0	1158.0	13.8	RSV6X1120	1136 x 12.00
1200.0	1227.3	9.5	RSV5X1200	1213 x 8.40
1200.0	1238.0	13.8	RSV6X1200	1216 x 12.00
1330.0	1368.0	13.8	RSV6X1330	1346 x 12.00
1500.0	1538.0	13.8	RSV6X1500	1516 x 12.00
1600.0	1638.0	13.8	RSV6X1600	1616 x 12.00
2000.0	2038.0	13.8	RSV6X2000	2016 x 12.00
2600.0	2638.0	13.8	RSV6X2600	2616 x 12.00

The rod diameters in **bold** type are in accordance with the recommendations of ISO 3320.
Other dimensions and all intermediate sizes up to 2600 mm diameter including imperial (inch) sizes can be supplied.
All O-Rings with 12 mm cross section are delivered as special profile ring.

Zurcon® Rimseal

Single Acting

Rubber Energized Plastic Faced Seal

Material:
Zurcon®

■ Zurcon® Rimseal*

Description

When the field of application and system requirements make high demands on leakage control and operational reliability, a redundant sealing system is necessary to ensure reliable sealing of hydraulic cylinders at the piston rod. Sealing systems with elastomer-energized polymer seals are a proven answer to widely varying demands for standardised grooves, simple installation, resistance to media, high and low temperatures and pressures. The system offers enormous flexibility in the choice and matching of materials.

The piston rod sealing system for hydraulic cylinders subject to heavy loads should consist of three elements:

The Turcon® Stepseal® 2K used as primary seal. This seal element offers the back pumping property necessary for redundant rod seal systems as well as good resistance to high and low temperatures and high media resistance.

The Zurcon® Rimseal was developed as the secondary seal in this system to ensure reliable sealing of thin oil films at low secondary pressures. A Zurcon® material (polyurethane Shore D 58) is used combined with a new seal profile.

The contact pressure curve is automatically optimised under dynamic conditions.

The final outer element of the redundant sealing system is a double-acting scraper seal (e.g. DA24, DA 22, DA 17, DA 27. Turcon® Excluder® 2 resp. 5 or Zurcon® Excluder® 500).

The optimum sealing system thus consists of three independent lip seals installed in line, whereby the hardness of the material decreases from the pressure side to the atmospheric side.

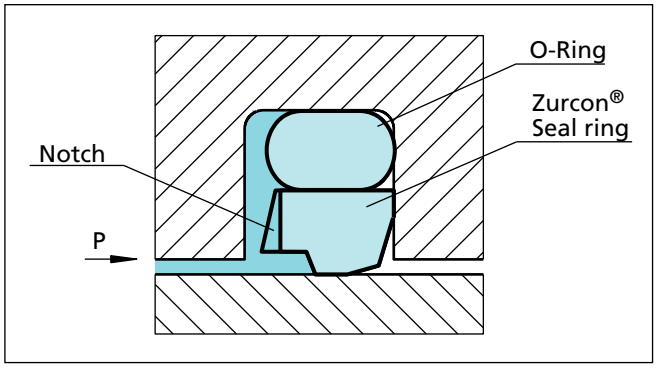

Figure 24 Zurcon® Rimseal

* Patent No.: EP 0 670 444

Method of Operation

The Zurcon® Rimseal is an elastomer energised seal element. The changes in seal position in the groove necessary for an optimum sealing function are guaranteed by the combination of the two component parts (O-Ring and seal ring).

In order to achieve a contact pressure curve which enhances the sealing effect, the seal has a chamfer on the low pressure side. When under pressure and exposed to friction against the piston rod, this chamfer causes the seal to tilt slightly so that the seal ring is forced against the side of the groove. This creates an area of maximum pressure at the edge of the seal.

When the Zurcon® Rimseal is used in a system with a double-acting scraper DA 24 (DA 22, DA 17, DA 27, Excluder® 2 resp. 5 or 500), the sealing function of the system must be assured even if pressure build-up occurs between the Zurcon® Rimseal and the double-acting scraper seal.

For this reason, the high-pressure side of the seal ring also has a chamfer which, in the event of a build-up of pressure behind the Zurcon® Rimseal, comes into contact with the flank of the groove. The Zurcon® Rimseal moves in the groove so that a contact pressure distribution is obtained on the piston rod which enhances the back pumping effect.

Advantages

- High static and dynamic leak tightness
- Low friction for reduced power loss
- High wear resistance for long service life
- Small groove
- Easy installation
- Optimum system element
- ISO/DIN grooves optional
- Available for any diameter from 8 to 2200 mm

Application Examples

- Mobile hydraulics
- Standard cylinders
- Machine tools
- Injection moulding machines
- Presses

Technical Data

Operating conditions

Pressure:	In tandem system: Up to 60 MPa As an individual element: 25MPa
Velocity:	5 m/s with short strokes (<1 m) in tandem system
Temperature:	-45 °C to +110 °C depending on O-Ring material
Media:	Hydraulic fluids -Mineral oil -Synthetic and natural esters -HEES. HETG up to +60 °C -Flame retardant fluids HFA. HFC

Important Note:
The above data are maximum values and cannot be used at the same time. e.g. the maximum operating speed depends on material type, pressure, temperature and gap value.
Temperature range also dependent on medium.

Materials

The Zurcon® Rimseal is made in the following material combinations as standard:

Zurcon® Rimseal:	Zurcon® Z52 Special polyurethane 58 Shore D
O-Ring:	NBR. 70 Shore A
Set code:	Z52N or Z52T

Series

The Zurcon® Rimseal is a system seal and is preferably used in tandem sealing systems in conjunction with the Turcon® Stepseal® 2K. For this reason the type series are identical with those for the Turcon® Stepseal® 2K.

Table XX shows the relationship between the series number according to the seal diameter range and the different application class sizes. These application classes are:

Standard application	RR13
Light application	RR15
Heavy-duty application	RR11

Redundant Sealing System

Redundant sealing systems are used where the application conditions no longer permit reliable sealing over the demanded service life with a single seal.

The property of the tandem sealing system is particularly important during cold starts when, due to the very high viscosity of the oil, the primary seal allows oil to pass as the piston rod is extended. In the tandem system the oil is heated as a result of the friction at the primary seal and is then reliably wiped off - at a now lower viscosity - by the secondary seal, the Zurcon® Rimseal.

As the piston rod is retracted, the oil is stored in the reservoir between the seals, and is then pumped back against the system pressure by the hydrodynamics in the seal clearance of the Turcon® Stepseal® 2K.

Particularly with strokes of more than 1 metre, constructional measures have to be taken to provide a storage chamber between the seals.

The Zurcon® Rimseal is designed so that it also has the back pumping properties necessary when using a double-acting scraper in the rod sealing system.

Due to the controlled sealing behaviour of the individual elements in the sealing system and the appropriate combination of the seal materials, a rod seal system is obtained with a low overall friction.

The Figure 25 shows a redundant rod seal system consisting of Turcon® Stepseal® 2K, Zurcon® Rimseal and Rod Scraper DA 22 with corresponding wear ring arrangement.

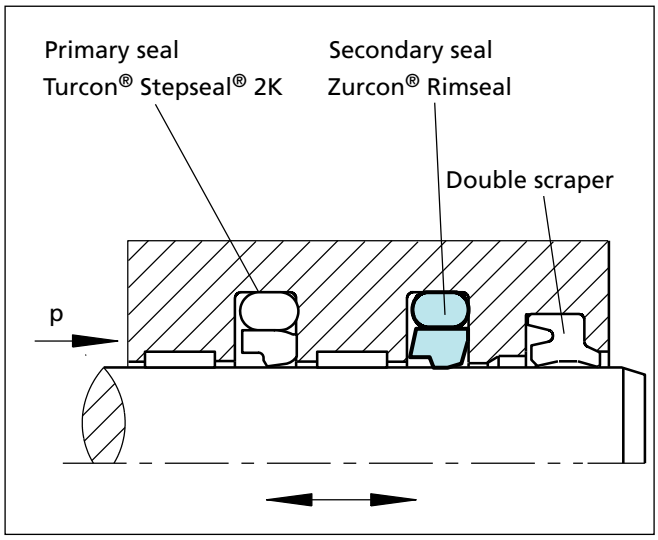

Figure 25 Zurcon® Rimseal in tandem configuration

■ Installation Recommendation

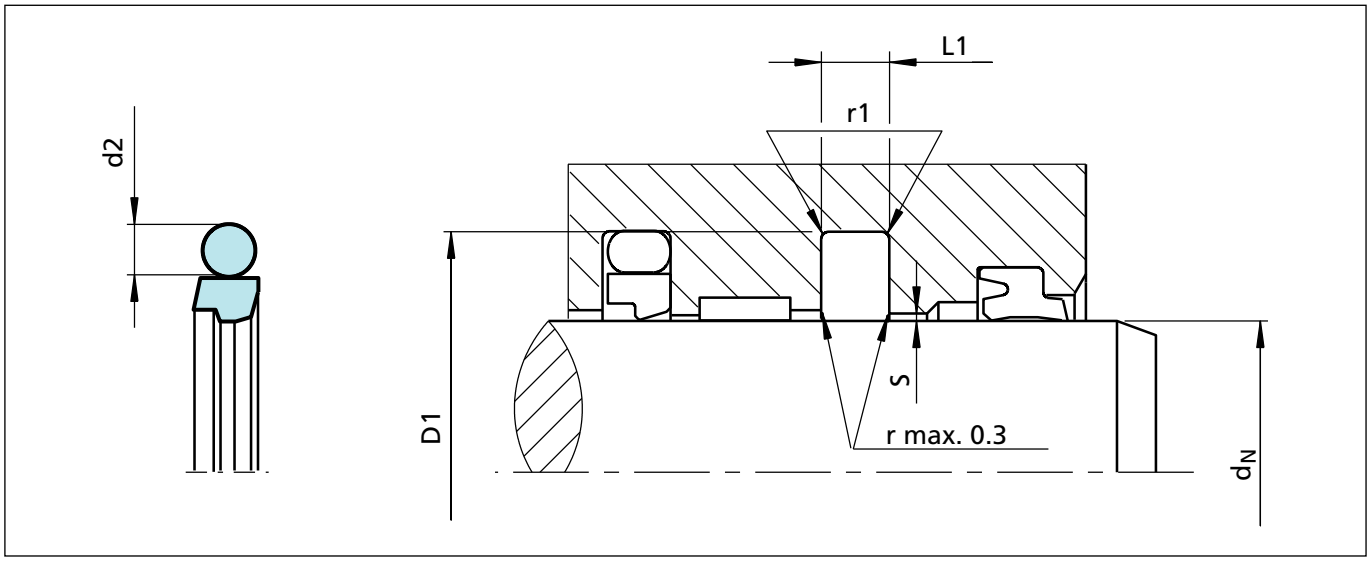

Figure 26 Installation drawing

Table XX Installation dimensions - Standard Recommendation

Rod Diameter d_N f8/h9			Groove Diameter	Groove Width	Radius	Radial Clearance S max.		O-Ring Cross-Section
Series No. RR 13 Standard Application	**Series No. RR 15 Light Application**	**Series No. RR 11 Heavy Duty Application**	D_1 H9	L_1 +0.2	r_1	**10 MPa**	**20 MPa**	d_2
8 - 18.9	19 - 37.9	-	d_N + 7.3	3.2	0.6	0.40	0.25	2.62
19 - 37.9	38 - 199.9	8 - 18.9	d_N + 10.7	4.2	1.0	0.40	0.25	3.53
38 - 199.9	200 - 255.9	19 - 37.9	d_N + 15.1	6.3	1.3	0.50	0.30	5.33
200 - 255.9	256 - 649.9	38 - 199.9	d_N + 20.5	8.1	1.8	0.60	0.35	7.00
256 - 649.9	650 - 999.9	200 - 255.9	d_N + 24.0	8.1	1.8	0.60	0.35	7.00
650 - 999.9	1000 - 2200	256 - 649.9	d_N + 27.3	9.5	2.5	0.70	0.50	8.40
1000 - 2200	-	650 - 999.9	d_N + 38.0	13.8	3.0	1.00	0.70	12.00

Installation in closed grooves from diameters > 18 mm
Also for installation according to ISO 7425/ 2

Ordering example

Zurcon® Rimseal complete with NBR O-Ring
Series RR 13 (from Table XX).

Rod diameter: d_N = 80.0 mm
TSS Part No.: RR1300800
(from Table XXI).

The TSS Article Number for all sizes not shown in Table XXI can be determined following the example opposite.
** For diameters ≥ 1000.0 mm multiply only by factor 1.
Example: RR13 for diameter 1200.0 mm.
TSS Article No.: RR13**X1200** - Z52N.

TSS Article No. RR13 0 0800 - Z52 N*

- TSS Series No.
- Type (Standard)
- Rod diameter x 10**
- Quality Index (Standard)
- Material code (Seal ring)
- Material code (O-Ring)

* Zurcon® Rimseal is always supplied as a set with a Nitrile O-Ring, code N or T. See page 25 O-Ring code.

Table XXI Installation dimensions / TSS Article No.

Rod	Groove Dia.	Groove Width	TSS Article No.*	O-Ring Size
d_N f8/h9	D_1 H9	L_1 +0.2		
8.0	**15.3**	**3.2**	**RR1300080-Z52N**	**10.77 x 2.62**
10.0	**17.3**	**3.2**	**RR1300100-Z52N**	**12.37 x 2.62**
12.0	**19.3**	**3.2**	**RR1300120-Z52N**	**13.94 x 2.62**
14.0	**21.3**	**3.2**	**RR1300140-Z52N**	**17.12 x 2.62**
16.0	**23.3**	**3.2**	**RR1300160-Z52N**	**18.72 x 2.62**
18.0	**25.3**	**3.2**	**RR1300180-Z52N**	**20.29 x 2.62**
20.0	27.3	3.2	RR1500200-Z52N	21.89 x 2.62
20.0	**30.7**	**4.2**	**RR1300200-Z52N**	**23.40 x 3.53**
22.0	29.3	3.2	RR1500220-Z52N	25.07 x 2.62
22.0	**32.7**	**4.2**	**RR1300220-Z52N**	**26.58 x 3.53**
25.0	32.3	3.2	RR1500250-Z52N	26.64 x 2.62
25.0	**35.7**	**4.2**	**RR1300250-Z52N**	**29.75 x 3.53**
28.0	35.3	3.2	RR1500280-Z52N	29.82 x 2.62
28.0	**38.7**	**4.2**	**RR1300280-Z52N**	**32.92 x 3.53**
30.0	37.3	3.2	RR1500300-Z52N	32.99 x 2.62
30.0	40.7	4.2	RR1300300-Z52N	34.52 x 3.53
32.0	39.3	3.2	RR1500320-Z52N	34.59 x 2.62
32.0	**42.7**	**4.2**	**RR1300320-Z52N**	**36.09 x 3.53**
35.0	42.3	3.2	RR1500350-Z52N	37.77 x 2.62
35.0	45.7	4.2	RR1300350-Z52N	37.70 x 3.53
36.0	43.3	3.2	RR1500360-Z52N	39.34 x 2.62

The rod diameters in **bold** type are in accordance with the recommendations of ISO 3320.
Other dimensions and all intermediate sizes up to 2200 mm diameter including imperial (inch) sizes can be supplied.
* TSS Article Number incl. of NBR-O-Ring.
For application of low-temperature O-Ring, please use Material Set Code Z52T instead of Z52N
All O-Rings with 12 mm cross section are delivered as special profilring.

Rod	Groove Dia.	Groove Width	TSS Article No.*	O-Ring Size
d_N f8/h9	D_1 H9	L_1 +0.2		
36.0	**46.7**	**4.2**	**RR1300360-Z52N**	**40.87 x 3.53**
40.0	50.7	4.2	RR1500400-Z52N	44.04 x 3.53
40.0	**55.1**	**6.3**	**RR1300400-Z52N**	**43.82 x 5.33**
45.0	55.7	4.2	RR1500450-Z52N	50.39 x 3.53
45.0	**60.1**	**6.3**	**RR1300450-Z52N**	**50.17 x 5.33**
50.0	60.7	4.2	RR1500500-Z52N	53.57 x 3.53
50.0	**65.1**	**6.3**	**RR1300500-Z52N**	**56.52 x 5.33**
55.0	65.7	4.2	RR1500550-Z52N	59.92 x 3.53
55.0	70.1	6.3	RR1300550-Z52N	59.69 x 5.33
56.0	**71.1**	**6.3**	**RR1300560-Z52N**	**62.87 x 5.33**
60.0	70.7	4.2	RR1500600-Z52N	63.09 x 3.53
60.0	75.1	6.3	RR1300600-Z52N	66.04 x 5.33
63.0	73.7	4.2	RR1500630-Z52N	66.27 x 3.53
63.0	**78.1**	**6.3**	**RR1300630-Z52N**	**69.22 x 5.33**
65.0	80.1	6.3	RR1300650-Z52N	69.22 x 5.33
70.0	**85.1**	**6.3**	**RR1300700-Z52N**	**75.57 x 5.33**
75.0	90.1	6.3	RR1300750-Z52N	81.92 x 5.33
80.0	90.7	4.2	RR1500800-Z52N	85.32 x 3.53
80.0	**95.1**	**6.3**	**RR1300800-Z52N**	**85.09 x 5.33**
85.0	100.1	6.3	RR1300850-Z52N	91.44 x 5.33
90.0	**105.1**	**6.3**	**RR1300900-Z52N**	**94.62 x 5.33**
95.0	110.1	6.3	RR1300950-Z52N	100.97 x 5.33
100.0	**115.1**	**6.3**	**RR1301000-Z52N**	**107.32 x 5.33**
105.0	120.1	6.3	RR1301050-Z52N	110.49 x 5.33
110.0	**125.1**	**6.3**	**RR1301100-Z52N**	**116.84 x 5.33**
110.0	130.5	8.1	RR1101100-Z52N	116.89 x 7.0
115.0	130.1	6.3	RR1301150-Z52N	120.02 x 5.33
120.0	135.1	6.3	RR1301200-Z52N	126.37 x 5.33
125.0	**140.1**	**6.3**	**RR1301250-Z52N**	**129.54 x 5.33**
125.0	145.5	8.1	RR1101250-Z52N	132.72 x 7.0
130.0	145.1	6.3	RR1301300-Z52N	135.89 x 5.33
135.0	150.1	6.3	RR1301350-Z52N	142.24 x 5.33
140.0	**155.1**	**6.3**	**RR1301400-Z52N**	**145.42 x 5.33**

The rod diameters in **bold** type are in accordance with the recommendations of ISO 3320.
Other dimensions and all intermediate sizes up to 2200 mm diameter including imperial (inch) sizes can be supplied.
* TSS Article Number incl. of NBR-O-Ring.
For application of low-temperature O-Ring, please use Material Set Code Z52T instead of Z52N
All O-Rings with 12 mm cross section are delivered as special profilring.

Rod	Groove Dia.	Groove Width	TSS Article No.*	O-Ring Size
d_N f8/h9	D_1 H9	L_1 +0.2		
145.0	160.1	6.3	RR1301450-Z52N	151.77 x 7.0
150.0	165.1	6.3	RR1301500-Z52N	158.12 x 5.33
150.0	170.5	8.1	RR1101500-Z52N	158.12 x 7.0
155.0	170.1	6.3	RR1301550-Z52N	158.12 x 5.33
160.0	**175.1**	**6.3**	**RR1301600-Z52N**	**164.47 x 5.33**
160.0	180.5	8.1	RR1101600-Z52N	170.82 x 7.0
165.0	180.1	6.3	RR1301650-Z52N	170.82 x 5.33
170.0	185.1	6.3	RR1301700-Z52N	177.17 x 5.33
175.0	190.1	6.3	RR1301750-Z52N	183.52 x 5.33
180.0	**195.1**	**6.3**	**RR1301800-Z52N**	**183.52 x 5.33**
180.0	200.5	8.1	RR1101800-Z52N	189.87 x 7.0
185.0	200.1	6.3	RR1301850-Z52N	189.87 x 5.33
190.0	205.1	6.3	RR1301900-Z52N	196.22 x 5.33
200.0	**220.5**	**8.1**	**RR1302000-Z52N**	**208.92 x 7.0**
210.0	230.5	8.1	RR1302100-Z52N	215.27 x 7.0
220.0	**240.5**	**8.1**	**RR1302200-Z52N**	**227.97 x 7.0**
230.0	250.5	8.1	RR1302300-Z52N	240.67 x 7.0
240.0	260.5	8.1	RR1302400-Z52N	253.37 x 7.0
250.0	**270.5**	**8.1**	**RR1302500-Z52N**	**266.07 x 7.0**
260.0	284.0	8.1	RR1302600-Z52N	266.07 x 7.0
280.0	**304.0**	**8.1**	**RR1302800-Z52N**	**291.47 x 7.0**
300.0	324.0	8.1	RR1303000-Z52N	316.87 x 7.0
310.0	334.0	8.1	RR1303100-Z52N	316.87 x 7.0
320.0	**344.0**	**8.1**	**RR1303200-Z52N**	**329.57 x 7.0**
340.0	364.0	8.1	RR1303400-Z52N	354.97 x 7.0
350.0	374.0	8.1	RR1303500-Z52N	367.67 x 7.0
360.0	**384.0**	**8.1**	**RR1303600-Z52N**	**367.67 x 7.0**
380.0	404.0	8.1	RR1303800-Z52N	393.07 x 7.0
400.0	424.0	8.1	RR1304000-Z52N	417.96 x 7.0
420.0	444.0	8.1	RR1304200-Z52N	430.66 x 7.0
450.0	474.0	8.1	RR1304500-Z52N	468.76 x 7.0
480.0	504.0	8.1	RR1304800-Z52N	494.16 x 7.0
500.0	524.0	8.1	RR1305000-Z52N	506.86 x 7.0

The rod diameters in **bold** type are in accordance with the recommendations of ISO 3320.
Other dimensions and all intermediate sizes up to 2200 mm diameter including imperial (inch) sizes can be supplied.
* TSS Article Number incl. of NBR-O-Ring.
For application of low-temperature O-Ring, please use Material Set Code Z52T instead of Z52N
All O-Rings with 12 mm cross section are delivered as special profilring.

Rod	Groove Dia.	Groove Width	TSS Article No.*	O-Ring Size
d_N f8/h9	D_1 H9	L_1 +0.2		
600.0	624.0	8.1	RR1306000-Z52N	608.08 x 7.0
610.0	634.0	8.1	RR1306100-Z52N	633.48 x 7.0
620.0	644.0	8.1	RR1306200-Z52N	633.48 x 7.0
630.0	654.0	8.1	RR1306300-Z52N	658.88 x 7.0
640.0	664.0	8.1	RR1306400-Z52N	658.88 x 7.0
650.0	677.3	9.5	RR1306500-Z52N	663 x 8.4
656.0	683.3	9.5	RR1306560-Z52N	669 x 8.4
660.0	687.3	9.5	RR1306600-Z52N	673 x 8.4
680.0	707.3	9.5	RR1306800-Z52N	693 x 8.4
685.0	712.3	9.5	RR1306850-Z52N	698 x 8.4
700.0	724.0	8.1	RR1507000-Z52N	712 x 7.0
700.0	727.3	9.5	RR1307000-Z52N	713 x 8.4
710.0	737.3	9.5	RR1307100-Z52N	723 x 8.4
730.0	757.3	9.5	RR1307300-Z52N	743 x 8.4
760.0	787.3	9.5	RR1307600-Z52N	773 x 8.4
765.0	792.3	9.5	RR1307650-Z52N	778 x 8.4
780.0	807.3	9.5	RR1307800-Z52N	793 x 8.4
790.0	817.3	9.5	RR1307900-Z52N	803 x 8.4
800.0	827.3	9.5	RR1308000-Z52N	813 x 8.4
810.0	837.3	9.5	RR1308100-Z52N	823 x 8.4
820.0	847.3	9.5	RR1308200-Z52N	833 x 8.4
830.0	857.3	9.5	RR1308300-Z52N	843 x 8.4
850.0	877.3	9.5	RR1308500-Z52N	863 x 8.4
870.0	897.3	9.5	RR1308700-Z52N	883 x 8.4
880.0	907.3	9.5	RR1308800-Z52N	893 x 8.4
885.0	912.3	9.5	RR1308850-Z52N	898 x 8.4
890.0	917.3	9.5	RR1308900-Z52N	903 x 8.4
930.0	957.3	9.5	RR1309300-Z52N	943 x 8.4
955.0	982.3	9.5	RR1309550-Z52N	968 x 8.4
1000.0	1038.0	13.8	RR13X1000-Z52N	1016 x 12
1035.0	1073.0	13.8	RR13X1035-Z52N	1051 x 12
1040.0	1067.3	9.5	RR15X1040-Z52N	1053 x 8.4
1040.0	1078.0	13.8	RR13X1040-Z52N	1056 x 12

The rod diameters in **bold** type are in accordance with the recommendations of ISO 3320.
Other dimensions and all intermediate sizes up to 2200 mm diameter including imperial (inch) sizes can be supplied.
* TSS Article Number incl. of NBR-O-Ring.
For application of low-temperature O-Ring, please use Material Set Code Z52T instead of Z52N
All O-Rings with 12 mm cross section are delivered as special profilring.

Rod	Groove Dia.	Groove Width	TSS Article No.*	O-Ring Size
d_N f8/h9	D_1 H9	L_1 +0.2		
1050.0	1077.3	9.5	RR15X1050-Z52N	1063 x 8.4
1050.0	1088.0	13.8	RR13X1050-Z52N	1066 x 12
1100.0	1138.0	13.8	RR13X1100-Z52N	1116 x 12
1120.0	1147.3	9.5	RR15X1120-Z52N	1133 x 8.4
1120.0	1158.0	13.8	RR13X1120-Z52N	1136 x 12
1200.0	1227.3	9.5	RR15X1200-Z52N	1213 x 8.4
1200.0	1238.0	13.8	RR13X1200-Z52N	1216 x 12
1330.0	1357.3	9.5	RR15X1330-Z52N	1343 x 8.4
1330.0	1368.0	13.8	RR13X1330-Z52N	1346 x 12
1500.0	1527.3	9.5	RR15X1500-Z52N	1513 x 8.4
1500.0	1538.0	13.8	RR13X1500-Z52N	1516 x 12
1600.0	1638.0	13.8	RR13X1600-Z52N	1616 x 12
2000.0	2038.0	13.8	RR13X2000-Z52N	2016 x 12

The rod diameters in **bold** type are in accordance with the recommendations of ISO 3320.
Other dimensions and all intermediate sizes up to 2200 mm diameter including imperial (inch) sizes can be supplied.
* TSS Article Number incl. of NBR-O-Ring.
For application of low-temperature O-Ring, please use Material Set Code Z52T instead of Z52N
All O-Rings with 12 mm cross section are delivered as special profilring.

POLYPAC® - Veepac CH

Single Acting

Set of Chevron Rings

With Support and Pressure Energizing Ring

Without and with Anti-extrusion Ring

Material:
Fabric Reinforced Rubber - POM or PTFE

■ Veepac CH

Description

Veepac seals are sets of fabric reinforced chevron rings. They are composed by a support ring, "V" shaped sealing rings and a pressure energizing ring.

The support ring or base ring guides and sustains the other "V" shaped rings for best performance. Special versions provide incorporated anti-extrusion rings, either on the inner or outer side, for rod or piston applications (see type CH/NEI or CH/NEO). In standard version the support ring is manufactured in cotton fabric reinforced rubber, for a good anti-extrusion resistance.

The intermediate "V" shaped rings (vee-rings) are the real sealing elements of Veepac seals. Their particular shape confirs the capacity of increasing sealing effectiveness under high pressure. In standard version they are made in cotton fabric reinforced NBR and pure NBR.

The energizer ring ensures uniform loading of pressure on the other rings. This element is manufactured in acetal resin, or cotton fabric reinforced nitrile for diameters over 300 mm (standard material).

Design

The veepac seals are available in different compositions. The standard version consists in a support ring, two fabric reinforced vee-rings, one rubber vee-ring and the energizing ring.

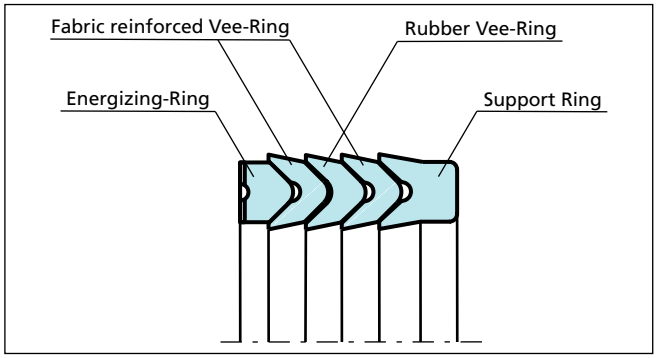

Figure 27 Veepac standard design

When the rubber vee-ring isn't available (indicated in the Table XXIII with the symbol ^) the veepac are assembled with three fabric reinforced vee-ring as shown in figure below.

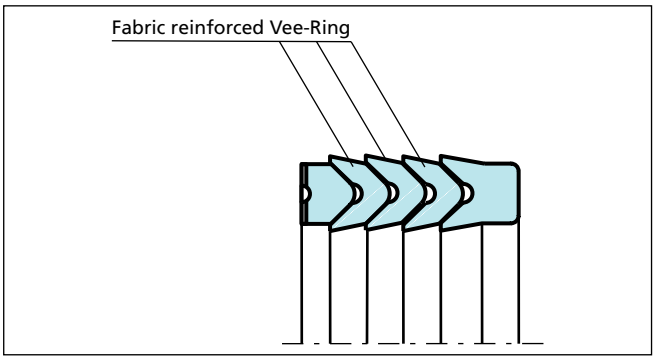

Figure 28 Veepac design with 3 fabric reinforced vee-ring

Where extrusion gaps are greater than those specified or for higher pressure conditions, special designs incorporating anti-extrusion rings can be made, to suit rods (suffix NEI) and at the Polypac ref.

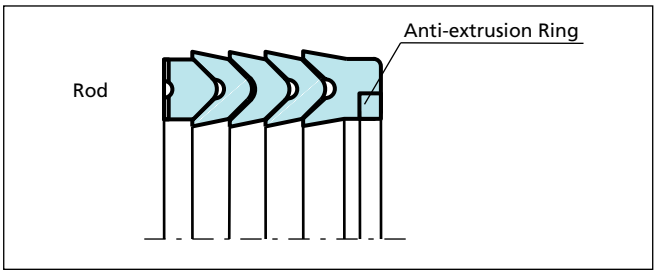

Figure 29 Veepac design with anti-extrusion ring

Advantages

- Exceptional wear resistance
- Pre-load adjustment capability
- Excellent behaviour in harsh conditions
- Rod-seal replacement without complete cylinder dismantling possible
- Long service life

Application Examples

VEEPAC seals are recommended for single acting or double acting (back to back installation) hydraulic cylinders in the following applications:

- Ship hydraulics
- Excavators
- Steel mills
- Presses

Technical Data

Pressure:	Up to 40 MPa
Velocity:	Up to 0.5 m/s
Temperature:	-30 °C to +200 °C
Media:	Hydraulic fluids Mineral Oil based hydraulic fluids,Water/oil and Water/ Glycol emulsions.
Groove type:	Open

Important Note:
The above data are maximum values and cannot be used at the same time. e.g. the maximum operating speed depends on material type, pressure, temperature and gap value.
Temperature range also dependent on medium.

Gap Dimensions

To prevent extrusion the diameter not facing the pressure must be max. 0.3 mm smaller (than the piston seal) and 0.3 mm larger (than the rod seal). Using Veepac with Back-up Ring enables double values.

Materials

Components of the VEEPAC seals are made in different combinations of materials, according to the specific application (see table below).

Table XXII Material Selection

Material Set Code	Temperature	Sealing Ring Material	Energizer Ring Material	
N0O0C	-30 to +130 °C	Cotton reinforced NBR	POM-GL-BK	up to 300 mm I.D.
			Cotton reinforced NBR	over 300 mm I.D.
V0O0A	-20 to +150 °C	Aramidic Fibre reinforced FKM	POM-GL-BK	up to 300 mm I.D.
			Aramidic Fibre reinforced FKM	over 300 mm I.D.
V0P0A	-20 to +200 °C	Aramidic Fibre reinforced FKM	Filled PTFE	up to 300 mm I.D.
			Aramidic Fibre reinforced FKM	over 300 mm I.D.

Highlighted material is standard.

■ Installation Recommendation

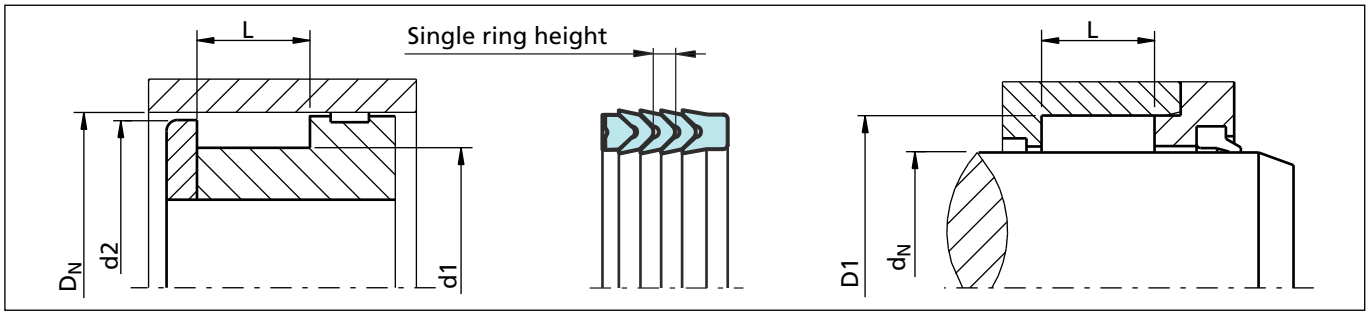

Figure 30 Installation drawing

Ordering Example

For a **rod or piston** application of standard Veepac sealing element composed by: Support ring, 3 elements vee-rings and Energizer ring:

Rod/Groove Dia.:	d_N/d1 = 80.0 mm
Groove Dia./Bore:	D1/D_N = 100.0 mm
TSS Part No.:	RCH1 0 0800
Material Set-Code:	N0O0C
Polypac Part. No.:	CH 393314

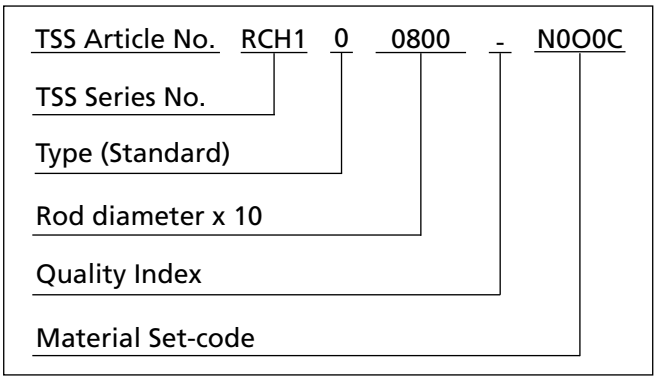

Table XXIII Installation dimensions / TSS Part No.

Rod/Groove Dia.	Groove Dia./ Bore	Groove Width	Diameter	Single Ring Height	Special Version		TSS Part No.	Polypac Ref. No.*
d_N h9/F8	**D1** H11	**L** -0.25	**d2** +/-0.1					
d1 h11	**D_N** H9/f8							
10.00	20.00	11.00	19.00	1.70			RCH000100	CH 078039/B
12.00	25.00	14.32	24.00	2.56			RCH000120	CH 098047/B
12.70	25.40	19.05	24.40	3.17			RCH000127	CH 100050
14.00	27.00	14.32	26.00	2.56	#		RCH000140	CH 106055/B
16.00	29.00	14.32	28.00	2.56			RCH000160	CH 114062/B
18.00	31.00	14.32	30.00	2.56			RCH000180	CH 122070/B
18.25	28.57	16.05	27.60	2.56			RCH000183	CH 112071
20.00	30.00	21.50	29.00	3.81			RCH000200	CH 118078
20.00	31.50	17.50	30.50	2.97			RCH100200	CH 124078

* As the Polypac Ref. No. does not refer to the material, please always state the full number if available for identification.
"#" and "^" see Table XXIV.

POLYPAC® - Veepac CH

Rod/Groove Dia.	Groove Dia./ Bore	Groove Width	Diameter	Single Ring Height	Special Version		TSS Part No.	Polypac Ref. No.*
d_N h9/F8	**D1** H11	**L** -0.25	**d2** +/-0.1					
d1 h11	D_N H9/f8							
20.00	32.00	18.15	31.00	3.15	#	^	RCH200200	CH 125078
20.00	33.00	14.32	32.00	2.56			RCH300200	CH 129078/B
20.00	36.00	24.00	35.00	4.04			RCH400200	CH 141078
22.00	32.00	18.13	31.00	2.75			RCH000220	CH 125086
22.00	38.00	26.00	37.00	4.21			RCH100220	CH 149086
22.00	40.00	22.50	39.00	3.70		^	RCH200220	CH 157086
25.00	35.00	17.30	34.00	2.82			RCH000250	CH 137098
25.00	40.00	19.84	39.00	3.50			RCH100250	CH 157098
25.00	42.00	25.40	41.00	4.29			RCH200250	CH 165098
25.00	45.00	25.40	44.00	4.50	#	^	RCH300250	CH 177098
25.40	38.10	19.45	37.10	3.48			RCH000254	CH 150100
26.00	45.00	29.37	44.00	5.16			RCH000260	CH 177102
28.00	40.00	17.00	39.00	2.80			RCH000280	CH 157110
28.00	44.00	17.62	43.00	3.17	#		RCH100280	CH 173110/B
28.00	44.00	24.00	43.00	4.15	#		RCH200280	CH 173110/1
28.57	41.27	19.84	40.30	3.50			RCH000286	CH 162112
30.00	40.00	21.80	39.00	3.76			RCH000300	CH 157118
30.00	42.00	20.00	41.00	3.50			RCH100300	CH 165118
30.00	50.00	29.37	49.00	5.08			RCH300300	CH 196118
31.75	44.45	16.25	43.40	3.19			RCH000318	CH 175125/1
31.75	44.45	19.05	43.40	3.50			RCH100318	CH 175125
31.75	47.62	29.05	46.60	4.34		^	RCH200318	CH 187125
32.00	42.00	17.30	41.00	2.82			RCH000320	CH 165125
32.00	48.00	17.63	47.00	3.17	#	^	RCH100320	CH 188125/B
34.92	47.62	20.64	46.60	3.43			RCH000349	CH 187137
34.92	50.80	24.21	49.80	4.14	#		RCH100349	CH 200137
35.00	45.00	21.78	44.00	3.81			RCH000350	CH 177137
35.00	50.00	22.50	49.00	3.57			RCH100350	CH 196137
36.00	52.00	17.60	51.00	3.17			RCH100360	CH 204141/B
38.00	55.00	28.00	54.00	5.05			RCH000380	CH 216149
38.10	50.80	19.45	49.80	3.51			RCH000381	CH 200150
38.10	53.97	25.27	53.00	4.60			RCH100381	CH 212150
38.10	53.97	27.78	53.00	4.60			RCH200381	CH 212150/1

* As the Polypac Ref. No. does not refer to the material, please always state the full number if available for identification.
"#" and "^" see Table XXIV.

Rod/Groove Dia.	Groove Dia./ Bore	Groove Width	Diameter	Single Ring Height	Special Version		TSS Part No.	Polypac Ref. No.*
d_N h9/F8	D1 H11	L -0.25	d2 +/-0.1					
d1 h11	D_N H9/f8							
39.00	55.00	25.40	54.00	4.65		^	RCH000390	CH 216153
40.00	50.00	17.30	49.00	2.82			RCH000400	CH 196157
40.00	55.00	22.62	54.00	3.84			RCH100400	CH 216157
40.00	55.00	26.19	54.00	3.84			RCH200400	CH 216157/1
40.00	56.00	17.63	55.00	3.17			RCH300400	CH 220157/B
40.00	60.00	30.00	59.00	5.16	#		RCH400400	CH 236157
40.00	65.00	35.72	64.00	6.15			RCH500400	CH 255157
44.45	57.15	21.83	56.20	3.38			RCH000445	CH 225175
44.45	60.32	27.80	59.30	4.07	#		RCH100445	CH 237175
45.00	55.00	17.50	54.00	2.80			RCH000450	CH 216177
45.00	60.00	22.22	59.00	3.89			RCH100450	CH 236177
45.00	65.00	28.00	64.00	5.34			RCH200450	CH 255177
48.00	60.00	25.00	59.00	4.07		^	RCH000480	CH 236188
50.00	70.00	21.94	69.00	3.95			RCH200500	CH 275196/B
50.00	70.00	30.00	69.00	5.16			RCH300500	CH 275196
50.80	63.50	19.84	62.50	3.35			RCH000508	CH 250200
50.80	66.67	23.00	65.70	4.27			RCH100508	CH 262200
50.80	66.67	25.27	65.70	4.27			RCH200508	CH 262200/1
50.80	69.85	33.50	68.80	5.08	#		RCH300508	CH 275200
50.80	70.80	38.50	69.80	6.75	#	^	RCH400508	CH 278200
51.00	69.00	28.00	68.00	5.03			RCH000510	CH 271200
53.97	63.50	16.67	62.50	2.59	#		RCH000540	CH 250212
53.97	66.67	19.45	65.70	3.35	#	^	RCH100540	CH 262212
53.97	69.85	25.27	68.80	4.07			RCH200540	CH 275212
55.00	67.00	25.00	66.00	4.07			RCH000550	CH 263216
55.00	70.00	26.50	69.00	4.02			RCH100550	CH 275216
55.00	75.00	30.00	74.00	6.48			RCH200550	CH 295216
55.00	75.00	38.50	74.00	6.48			RCH400550	CH 295216/1
55.00	80.00	33.73	79.00	5.16	#		RCH500550	CH 314216
56.00	76.00	21.95	75.00	3.94		^	RCH000560	CH 299220/B
56.00	76.00	33.40	75.00	5.38			RCH100560	CH 299220
57.15	69.85	19.05	68.80	3.25			RCH000572	CH 275225
57.15	73.02	27.78	72.00	4.27	#		RCH100572	CH 287225

* As the Polypac Ref. No. does not refer to the material, please always state the full number if available for identification.
"#" and "^" see Table XXIV.

Rod/Groove Dia.	Groove Dia./ Bore	Groove Width	Diameter	Single Ring Height	Special Version		TSS Part No.	Polypac Ref. No.*
d_N h9/F8	**D1** H11	**L** -0.25	**d2** +/-0.1					
d1 h11	D_N H9/f8							
57.15	76.20	32.54	75.20	5.16			RCH200572	CH 300225
60.00	76.00	29.00	75.00	4.34			RCH100600	CH 299236
60.00	77.00	27.00	76.00	4.59			RCH200600	CH 303236
60.00	80.00	32.15	79.00	5.66			RCH300600	CH 314236
63.00	83.00	21.94	82.00	3.95			RCH000630	CH 326248/B
63.00	85.00	32.00	84.00	5.67			RCH100630	CH 334248
63.50	80.00	28.00	79.00	5.03		^	RCH200635	CH 314250
63.50	82.50	26.59	81.50	4.76			RCH300635	CH 325250
63.50	82.50	31.62	81.50	4.76			RCH400635	CH 325250/1
64.00	80.00	25.80	79.00	4.65			RCH000640	CH 314251
65.00	77.00	21.00	76.00	4.04			RCH000650	CH 303255
65.00	80.00	26.00	79.00	4.00	#		RCH100650	CH 314255
65.00	85.00	29.00	84.00	5.21			RCH200650	CH 334255
65.00	90.00	30.00	89.00	5.00		^	RCH300650	CH 354255
66.30	85.00	24.13	84.00	4.60	#		RCH000663	CH 334261
68.00	88.00	30.00	87.00	5.21	#		RCH000680	CH 346267
69.85	88.90	25.40	87.90	4.83			RCH100699	CH 350275
69.85	88.90	35.50	87.90	4.83			RCH200699	CH 350275/1
70.00	85.00	28.00	84.00	4.32			RCH100700	CH 334275
70.00	90.00	21.95	89.00	3.95		^	RCH200700	CH 354275/B
70.00	90.00	30.00	89.00	5.08			RCH300700	CH 354275
72.00	90.00	30.16	89.00	4.86		^	RCH000720	CH 354283
73.02	88.90	26.58	87.90	4.34			RCH000730	CH 350287
75.00	90.00	22.50	89.00	4.04			RCH000750	CH 354295
75.00	95.00	30.00	94.00	5.21			RCH100750	CH 374295
75.00	100.00	30.00	99.00	5.80		^	RCH300750	CH 393295
75.00	100.00	37.50	99.00	6.32	#	^	RCH400750	CH 393295/1
76.20	88.90	16.27	87.90	2.78			RCH000762	CH 350300
76.20	95.25	25.52	94.20	5.16	#		RCH100762	CH 375300/1
76.20	95.25	28.97	94.20	5.16			RCH200762	CH 375300
80.00	95.00	17.50	94.00	3.05			RCH000800	CH 374314
80.00	100.00	30.00	99.00	4.83			RCH100800	CH 393314
80.00	105.00	27.41	104.00	4.98		^	RCH200800	CH 413314/B

* As the Polypac Ref. No. does not refer to the material, please always state the full number if available for identification.
"#" and "^" see Table XXIV.

Rod/Groove Dia.	Groove Dia./ Bore	Groove Width	Diameter	Single Ring Height	Special Version		TSS Part No.	Polypac Ref. No.*
d_N h9/F8	D1 H11	L -0.25	d2 +/-0.1					
d1 h11	D_N H9/f8							
82.55	101.60	28.97	100.60	4.88			RCH100826	CH 400325
85.00	100.00	17.30	99.00	2.50			RCH000850	CH 393334
85.00	105.00	30.00	104.00	5.35			RCH100850	CH 413334
85.72	104.77	29.37	103.80	4.88			RCH100857	CH 412337
88.90	101.60	17.00	100.60	3.40			RCH000889	CH 400350
88.90	107.95	33.33	106.90	4.90		^	RCH200889	CH 425350/1
89.00	105.00	25.80	104.00	4.65			RCH000890	CH 413350
90.00	105.00	31.75	104.00	5.71			RCH000900	CH 413354
90.00	110.00	25.00	109.00	4.88			RCH100900	CH 433354/1
90.00	110.00	26.88	109.00	4.88			RCH200900	CH 433354
90.00	115.00	27.41	114.00	4.98		^	RCH300900	CH 452354/B
92.07	111.13	29.37	110.10	5.16	#	^	RCH000921	CH 437362
95.00	110.00	24.00	109.00	4.11			RCH000950	CH 433374
95.25	111.13	24.30	110.10	4.09	#	^	RCH000953	CH 437375
98.42	123.82	36.96	122.80	6.55			RCH100984	CH 487387
100.00	114.30	20.64	113.30	3.57			RCH001000	CH 450393
100.00	115.00	25.30	114.00	3.96			RCH101000	CH 452393
100.00	120.00	28.00	119.00	5.16			RCH201000	CH 472393
100.00	120.00	31.00	119.00	5.16	#		RCH301000	CH 472393/1
100.00	125.00	27.40	124.00	4.98		^	RCH401000	CH 492393/B
100.00	125.00	36.90	124.00	6.60		^	RCH501000	CH 492393
101.60	127.00	32.15	126.00	5.82	#		RCH001016	CH 500400
104.00	130.00	37.00	129.00	6.73			RCH001040	CH 511409
105.00	120.00	25.00	119.00	4.00			RCH001050	CH 472413
105.00	125.00	29.76	124.00	5.00		^	RCH201050	CH 492413
105.00	135.00	34.50	134.00	5.80		^	RCH301050	CH 531413
106.00	135.00	33.00	134.00	5.65	#	^	RCH001060	CH 531417
110.00	132.00	36.50	131.00	6.96			RCH201100	CH 519433
111.12	136.52	38.89	135.50	6.53	#	^	RCH001111	CH 537437
114.00	130.00	25.80	129.00	4.80			RCH001140	CH 511448
114.30	127.00	18.41	126.00	3.43			RCH001143	CH 500450
114.30	133.35	28.18	132.30	5.26		^	RCH101143	CH 525450
114.30	139.70	31.75	138.70	5.56	#	^	RCH201143	CH 550450

* As the Polypac Ref. No. does not refer to the material, please always state the full number if available for identification.
"#" and "^" see Table XXIV.

Rod/Groove Dia.	Groove Dia./ Bore	Groove Width	Diameter	Single Ring Height	Special Version		TSS Part No.	Polypac Ref. No.*
d_N h9/F8	**D1** H11	**L** -0.25	**d2** +/-0.1					
d1 h11	D_N H9/f8							
115.00	140.00	37.12	139.00	6.00		^	RCH101150	CH 551452
117.47	142.87	36.10	141.90	6.15	#	^	RCH001175	CH 562462
120.00	140.00	30.00	139.00	5.36			RCH001200	CH 551472
125.00	145.00	29.62	144.00	5.18			RCH001250	CH 570492
125.00	150.00	27.40	149.00	4.98			RCH101250	CH 590492/B
125.00	155.00	34.50	154.00	5.80	#	^	RCH201250	CH 610492
127.00	152.40	38.63	151.40	6.48			RCH001270	CH 600500
130.00	150.00	29.76	149.00	4.96			RCH001300	CH 590511
130.00	155.00	40.00	154.00	7.25	#	^	RCH101300	CH 610511
130.00	160.00	41.50	159.00	5.50	#		RCH201300	CH 629511
130.00	160.00	43.50	159.00	5.50	#		RCH301300	CH 629511/1
135.00	155.00	30.55	154.00	5.11			RCH001350	CH 610531
139.70	165.10	37.30	164.10	5.56	#	^	RCH001397	CH 650550
140.00	160.00	28.50	159.00	5.16			RCH001400	CH 629551
140.00	165.00	41.95	164.00	6.56	#		RCH101400	CH 649551
140.00	170.00	32.97	169.00	5.99		^	RCH201400	CH 669551/B
145.00	170.00	38.10	169.00	6.45		^	RCH001450	CH 669570
146.05	171.45	38.89	170.40	6.53		^	RCH001461	CH 675575
150.00	170.00	30.56	169.00	5.16			RCH001500	CH 669590
150.00	180.00	40.00	179.00	6.28		^	RCH101500	CH 708590
152.40	177.80	33.34	176.80	5.77		^	RCH001524	CH 700600
154.00	175.00	29.44	174.00	5.31		^	RCH001540	CH 688606
157.00	182.00	30.25	181.00	5.72		^	RCH001570	CH 716618
160.00	180.00	30.00	179.00	5.00	#		RCH001600	CH 708629
160.00	190.00	32.97	189.00	5.99		^	RCH101600	CH 748629/B
161.92	180.97	28.57	180.00	5.00	#	^	RCH001619	CH 712637
170.00	195.00	37.50	194.00	6.55		^	RCH001700	CH 767669
170.00	200.00	50.00	199.00	8.00	#	^	RCH101700	CH 787669
171.45	187.32	24.20	186.30	4.09	#	^	RCH001715	CH 737675
175.00	200.00	42.00	199.00	7.54			RCH001750	CH 787688
177.80	196.85	31.00	195.80	5.16		^	RCH001778	CH 775700
177.80	203.20	32.54	202.20	5.95		^	RCH101778	CH 800700
180.00	210.00	32.97	209.00	5.99			RCH001800	CH 826708/B

* As the Polypac Ref. No. does not refer to the material, please always state the full number if available for identification.
"#" and "^" see Table XXIV.

Rod/Groove Dia.	Groove Dia./ Bore	Groove Width	Diameter	Single Ring Height	Special Version		TSS Part No.	Polypac Ref. No.*
d_N h9/F8	D1 H11	L -0.25	d2 +/-0.1					
d1 h11	D_N H9/f8							
180.97	203.20	31.75	202.20	5.95			RCH000810	CH 800712
187.32	200.00	21.74	199.00	3.86		^	RCH001873	CH 787737
190.50	222.25	50.00	221.20	7.57		^	RCH001905	CH 875750
200.00	220.00	30.00	219.00	5.00			RCH002000	CH 866787
200.00	230.00	32.97	229.00	5.99		^	RCH102000	CH 905787/B
205.00	225.00	19.48	224.00	3.17		^	RCH002050	CH 885807
210.00	240.00	34.50	239.00	5.80			RCH002100	CH 944826
210.00	240.00	42.10	239.00	7.55		^	RCH102100	CH 944826/1
220.00	250.00	52.00	249.00	8.25		^	RCH002200	CH 984866
224.00	254.00	32.97	253.00	5.99		^	RCH002240	CH 1000881/B
228.60	254.00	38.10	253.00	6.30		^	RCH002286	CH 1000900
228.60	260.35	48.42	259.30	8.46			RCH102286	CH 1025900
240.00	270.00	45.00	269.00	8.03		^	RCH002400	CH 1062944
250.00	270.00	32.00	269.00	5.00			RCH002500	CH 1062984
254.00	279.40	38.10	268.40	5.95		^	RCH002540	CH 11001000
268.29	298.45	45.24	297.40	7.97		^	RCH002683	CH 11751056
269.88	307.98	53.97	307.00	8.44		^	RCH002699	CH 12121062
280.00	315.00	38.45	314.00	6.98		^	RCH002800	CH 12401102/B
288.93	307.98	28.57	307.00	5.21		^	RCH002889	CH 12121137
290.00	320.00	50.80	319.00	7.29		^	RCH002900	CH 12591141
300.00	320.00	32.00	319.00	5.00			RCH003000	CH 12591181
304.80	330.20	38.10	329.20	6.55		^	RCH003048	CH 13001200
310.00	330.00	30.00	329.00	5.50		^	RCH003100	CH 12991220
315.00	350.00	38.45	349.00	6.98		^	RCH003150	CH 13771240/B
320.00	365.00	55.00	364.00	8.50		^	RCH003200	CH 14371259
340.00	380.00	60.00	379.00	10.41		^	RCH003400	CH 14961338
350.00	390.00	60.00	389.00	10.54	#	^	RCH003500	CH 15351377
355.60	381.00	38.10	380.00	5.95			RCH003556	CH 15001400
368.30	406.40	57.15	405.40	10.00		^	RCH003683	CH 16001450
369.00	400.00	45.00	399.00	7.68		^	RCH003690	CH 15741452
400.00	440.00	54.00	439.00	8.38		^	RCH004000	CH 17321574
416.00	450.00	50.00	449.00	8.67		^	RCH004160	CH 17711637
420.00	460.00	51.60	459.00	8.40			RCH004200	CH 18111653
505.00	545.00	60.00	544.00	10.40		^	RCH005050	CH 21451988
700.00	750.00	73.00	749.00	6.35	#		RCH007000	CH 29532756

* As the Polypac Ref. No. does not refer to the material, please always state the full number if available for identification.
"#" and "^" see Table XXIV.

Table XXIV Explanation to "Special Version"

Not available with rubber V-ring		^		
Available upon request	#			

■ Installation Recommendation, Type POLYPAC® CH/NEI (with Back-up Ring)

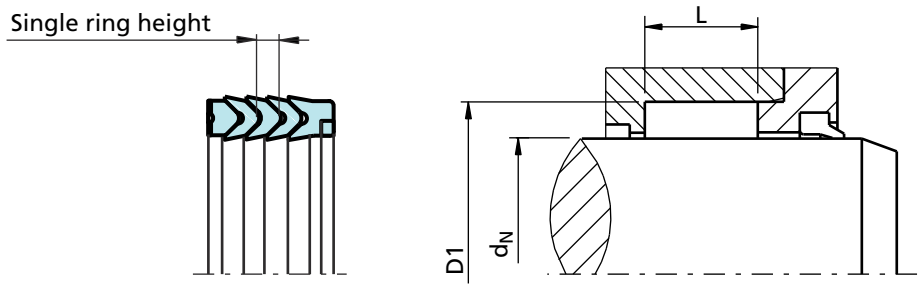

Figure 31 Installation drawing

Ordering Example

For a **rod** application of Veepac sealing element composed by: Support ring **with anti-extrusion ring**, 3 elements Vee-rings and energizer ring:

Rod diameter:	d_N = 80.0 mm
Groove diameter:	D1 = 100.0 mm
TSS Part No.:	RCH1 E 0800
Material Set-Code:	N0O0C
Polypac Part. No.:	CH 393314/NEI

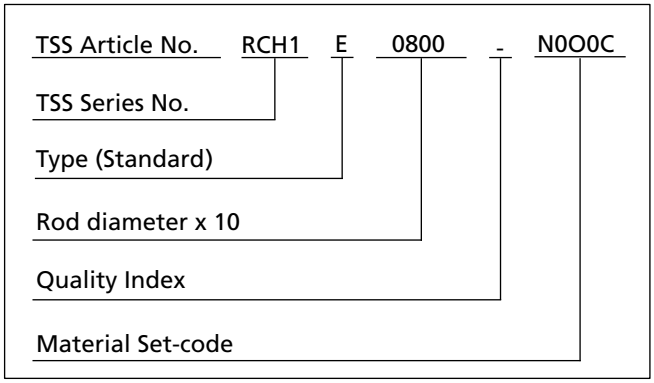

Table XXV Installation dimensions / TSS Part No.

Rod Diameter	Groove Diameter	Groove Width	Single Ring Height	Special Version		TSS Part No.	Polypac Ref. No.*
d_N h9/F8	**D1** H11	**L** -0.25					
10.00	20.00	11.00	1.70			RCH0E0100	CH 078039/B/NEI
28.00	44.00	17.62	3.17	#		RCH1E0280	CH 173110/B/NEI
28.00	44.00	24.00	4.15	#		RCH2E0280	CH 173110/1/NEI
30.00	45.00	22.20	3.80	#		RCH2E0300	CH 177118/NEI
30.00	50.00	29.37	5.08			RCH3E0300	CH 196118/NEI
32.00	48.00	17.63	3.17	#	^	RCH1E0320	CH 188125/B/NEI
36.00	51.00	24.00	4.14	#		RCH0E0360	CH 200141/NEI
40.00	55.00	22.62	3.84			RCH1E0400	CH 216157/NEI
40.00	55.00	26.19	3.84			RCH2E0400	CH 216157/1/NEI
45.00	60.00	22.22	3.89			RCH1E0450	CH 236177/NEI
48.00	62.00	22.22	3.73			RCH1E0480	CH 244188/NEI
50.00	65.00	24.60	4.34			RCH0E0500	CH 255196/NEI

* As the Polypac Ref. No. does not refer to the material, please always state the full number if available for identification.
"#" and "^" see Table XXVI.

Rod Diameter	Groove Diameter	Groove Width	Single Ring Height	Special Version		TSS Part No.	Polypac Ref. No.*
d_N h9/F8	**D1** H11	**L** -0.25					
50.00	65.00	26.00	4.34			RCH1E0500	CH 255196/1/NEI
50.00	70.00	30.00	5.16			RCH3E0500	CH 275196/NEI
53.97	73.02	31.75	5.16			RCH3E0540	CH 287212/NEI
55.00	70.00	26.50	4.02			RCH1E0550	CH 275216/NEI
55.00	75.00	31.00	6.48	#		RCH3E0550	CH 295216/2/NEI
55.00	75.00	38.50	6.48			RCH4E0550	CH 295216/1/NEI
56.00	76.00	33.40	5.38			RCH1E0560	CH 299220/NEI
60.00	75.00	19.00	3.00			RCH0E0600	CH 295236/NEI
60.00	76.00	29.00	4.34			RCH1E0600	CH 299236/NEI
60.00	80.00	32.15	5.66			RCH3E0600	CH 314236/NEI
63.00	85.00	32.00	5.67			RCH1E0630	CH 334248/NEI
63.50	82.50	26.59	4.76			RCH3E0635	CH 325250/NEI
63.50	82.50	31.62	4.76			RCH4E0635	CH 325250/1/NEI
65.00	80.00	26.00	4.00	#		RCH1E0650	CH 314255/NEI
65.00	85.00	29.00	5.21			RCH2E0650	CH 334255/NEI
69.85	85.72	23.81	4.09			RCH0E0699	CH 337275/NEI
70.00	83.00	25.00	4.25	#		RCH0E0700	CH 326275/NEI
75.00	90.00	22.50	4.04			RCH0E0750	CH 354295/NEI
75.00	95.00	31.50	5.21			RCH2E0750	CH 374295/1/NEI
80.00	100.00	30.00	4.83			RCH1E0800	CH 393314/NEI
85.00	105.00	30.00	5.35			RCH1E0850	CH 413334/NEI
85.72	104.77	29.37	4.88			RCH1E0857	CH 412337/NEI
90.00	110.00	26.88	4.88			RCH2E0900	CH 433354/NEI
95.00	110.00	24.00	4.11			RCH0E0950	CH 433374/NEI
95.00	120.00	41.00	7.50	#	^	RCH1E0950	CH 472374/NEI
100.00	120.00	28.00	5.16			RCH2E1000	CH 472393/NEI
106.00	135.00	33.00	5.65	#	^	RCH0E1060	CH 531417/NEI
110.00	130.00	27.00	5.00	#		RCH0E1100	CH 511433/1/NEI
110.00	130.00	30.00	5.00	#		RCH1E1100	CH 511433/NEI
110.00	132.00	36.50	6.96			RCH2E1100	CH 519433/NEI
110.00	135.00	41.50	7.00	#	^	RCH3E1100	CH 531433/NEI
115.00	130.00	25.49	4.35	#		RCH0E1150	CH 511452/NEI
120.00	140.00	30.00	5.36			RCH0E1200	CH 551472/NEI
120.00	145.00	39.50	7.25	#	^	RCH1E1200	CH 570472/NEI

* As the Polypac Ref. No. does not refer to the material, please always state the full number if available for identification.
"#" and "^" see Table XXVI.

Table XXVI Explanation to "Special Version"

Not available with rubber V-ring		^		
Available upon request	#			

POLYPAC® - VEEPAC CH/G5

Single Acting

Set of Chevron Rings

With Support and Pressure Energizing Ring

Material:
Fabbric Reinforced Rubber, Rubber, POM or PTFE

■ Veepac CH/G5 Set

Description

Veepac is a set of fabric reinforced Chevron rings comprising of a support ring (1), sealing rings (2) and a pressure energising ring (3). In the packing set the energising axial force is transferred between the individual packing rings so that each ring is pressed into positive contact with the rod surface. Additional to the standard material special material grades are available for a large variety of working conditions. The figure shows the Veepac design.

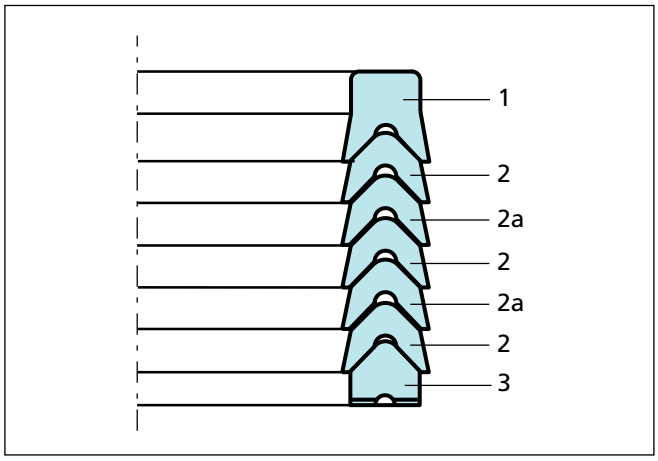

Figure 32 Veepac design

1) "U" or base rings in standard version manufactured in reinforced fabric comprising of layers of cotton impregnated with nitrile rubber compounded to resist extrusion. This component supports the Vee Rings for effective performances.

2) Vee Rings are made of reinforced cotton fabric and nitrile elastomer, in standard version, to give good resilience, sealing efficiency and extrusion resistance.

   Due to their specific design, Vee Rings are sensitive to fluid pressure variations, enabling them to deflect throughout their radial section, increase the seal loading and effectiveness in proportion to the pressures applied.

2a) Vee Rings are made of pure elastomer for high sealing efficienty.

3) Energiser or spreader rings are manufactured in acetal resin or PTFE. The function of this component is to ensure a uniform pressure distribution.

Advantages

- Very robust seal
- Non sensitive
- Adjustable
- Easy replacement in the field with split rings
- Extensive range of sizes (see symmetrical seals)
- Requires non super mating surfaces

Application Examples

- Mining equipment (with approvals)
- Excavators -Steel mills
- Water hydraulic
- Presses
- Ship hydraulics
- Stabilizer cylinders on cranes
- Continous casting equipment

Technical Data

Operating conditions

Pressure:	Up to 40 MPa
Velocity:	Up to 0.5 m/s
Temperature:	-30 °C to +200 °C depending on material
Media:	Hydraulic fluids Mineral oil, water glycol, water emulsions

Important Note:
The above data are maximum values and cannot be used at the same time. e.g. the maximum operating speed depends on material type, pressure, temperature and gap value.
Temperature range also dependent on medium.

Materials

The following material combination can be supplied:

	Standard	Non standard	Non standard
Material Code	N0ONC	V0PVA	V0OVA
Vee-Rings and Back-up Ring	Cotton Fabric NBR	Aramid Fabric FKM	Aramid Fabric FKM
Spreader*	POM	PTFE	POM
Elastomeric Vee Rings	NBR	FKM	FKM
Temperature Range °C	-30 +130	-20 +200	-20 +150

* The material for the spreader is depending from the diameter

Design Instructions

Lead in chamfers

In order to avoid damage to the Veepac during installation, lead in chamfers of min. 5 x 20° must be provided on the rods.

Rod Diameter	Lead in Chamfer
0 - 100	5 x 20°
101 - 200	7 x 20°
201 - 400	10 x 20°

Surface roughness

Parameter	Mating Surface µm	Groove Surface µm
R_{max}	1.00 - 4.00	< 16.0
$R_{z\ DIN}$	0.63 - 2.50	< 10.0
R_a	0.10 - 0.40	< 1.6

The material contact area R_{mr} should be approx. 50 to 70%, determined at a cut depth c = 0.25 x R_z, relative to a reference line of C_{ref}. 5%.

Clearance

The gap behind the seal should not be larger than 0.30 mm in diameter.

■ Installation Recommendation

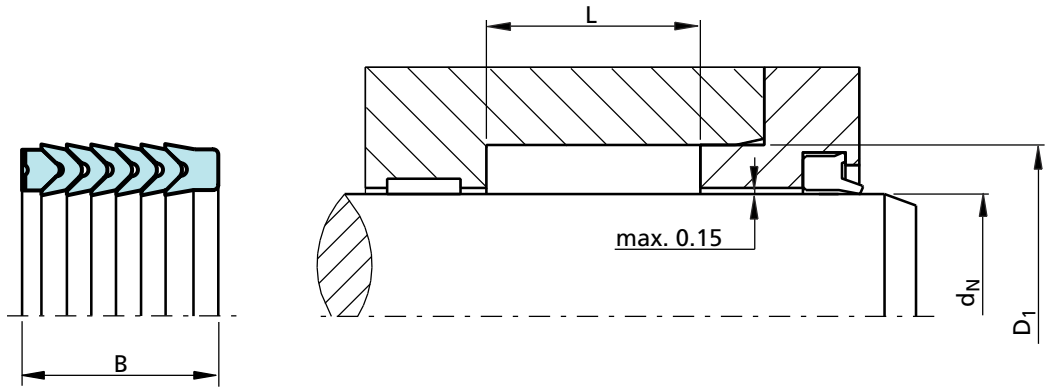

Figure 33 Installation drawing

Ordering example

Veepac Type RCH_G

Rod diameter:	d_N = 70.0 mm
Groove diameter:	D1 = 85.0 mm
Groove width:	L = 22.5 mm
TSS Part No.:	RCH0G0700 -
Material:	N0ONC (standard)

TSS Article No. RCH 0 G 0700 - N0ONC

- TSS Series No. (RCH)
- Design code (0)
- Execution Mark (G)
- Rod diameter x 10 (0700)
- Quality Index (Standard) (-)
- Material code (Standard) (N0ONC)

Polypac Ref. No.: CH 334275/G5

Table XXVII Installation dimensions / TSS Part No.

Rod Dia.	Groove Dia.	Groove Width	Seal Width	TSS Part No.	Description
d_N f8/h9	**D1** H11	**L** +0.2	**B**		
25.0	37.0	22.5	22.5	RCH0G0250	CH 145098/G5
25.0	40.0	22.5	22.5	RCH1G0250	CH 157098/G5
28.0	40.0	22.5	22.5	RCH0G0280	CH 157110/G5
30.0	45.0	22.5	22.5	RCH0G0300	CH 177118/G5
36.0	48.0	22.5	22.5	RCH0G0360	CH 188141/G5
40.0	55.0	22.5	22.5	RCH0G0400	CH 216157/G5
45.0	60.0	22.5	22.5	RCH0G0450	CH 236177/G5
45.0	65.0	27.5	27.5	RCH1G0450	CH 255177/G5
50.0	65.0	22.5	22.5	RCH0G0500	CH 255196/G5
56.0	71.0	22.5	22.5	RCH0G0560	CH 279220/G5
60.0	80.0	37.0	37.0	RCH0G0600	CH 314236/G5
65.0	85.0	40.0	40.0	RCH0G0650	CH 334255/G5
70.0	85.0	22.5	22.5	RCH0G0700	CH 334275/G5
70.0	90.0	40.0	40.0	RCH1G0700	CH 354275/G5
75.0	90.0	22.5	22.5	RCH0G0750	CH 354295/G5
80.0	95.0	22.5	22.5	RCH0G0800	CH 374314/G5
80.0	100.0	40.0	40.0	RCH1G0800	CH 393314/G5
85.0	100.0	22.5	22.5	RCH0G0850	CH 393334/G5
90.0	105.0	22.5	22.5	RCH0G0900	CH 413354/G5
90.0	110.0	40.0	40.0	RCH1G0900	CH 433354/G5
100.0	115.0	30.0	30.0	RCH0G1000	CH 452393/G5
100.0	120.0	40.0	40.0	RCH1G1000	CH 472393/G5
110.0	125.0	30.0	30.0	RCH0G1100	CH 492433/G5
110.0	130.0	40.0	40.0	RCH1G1100	CH 511433/G5
120.0	145.0	50.0	50.0	RCH0G1200	CH 570472/G5
125.0	140.0	34.0	34.0	RCH0G1250	CH 551492/G5
125.0	150.0	46.0	46.0	RCH1G1250	CH 590492/G5
140.0	155.0	34.0	34.0	RCH0G1400	CH 610551/G5
140.0	165.0	46.0	46.0	RCH1G1400	CH 649551/G5
160.0	180.0	40.0	40.0	RCH0G1600	CH 708629/G5
160.0	190.0	60.0	60.0	RCH1G1600	CH 748629/G5

CH Production numbers of the available dimensions in standard materials. For specific materials, please indicate existing Polypac designations.
Further sizes in chapter: Symmetrical Seals.

POLYPAC® - Selemaster SM

Single Acting

Compact Rod Seal

With Anti-extrusion Ring

Material:
Rubber + Fabric Reinforced
Rubber + POM

■ Selemaster SM

Description

The rod seal range has been designed to meet the needs of hydraulic equipments operating at high pressures and subjected to severe loading and vibration conditions.

The main sealing element is manufactured in a highly compression set resistant nitrile. The most important quality of this element is the design of the multiple sealing lips for maximum sealing efficiency and end face configuration, which ensures that the selemaster can tolerate vibrations and severe misalignment.

The support ring is made in cotton fabric reinforced nitrile elastomer; the "U" shape is energised when pressure is applied.

The last element is the anti-extrusion ring manufactured in POM.

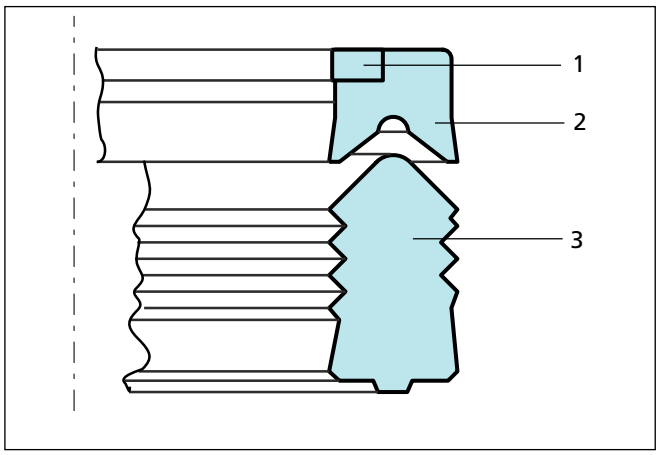

Figure 34 Selemaster design
1) POM anti-extrusion ring
2) Support ring in cotton fabric reinforced nitrile, NBR 80 Shore A
3) Sealing element in nitrile, NBR 80 Shore A

Note

- For low-temperature application -50 °C to +110 °C a special material - code N7C0 - Polypac Ref.: /1AX - 2187 is available

Advantages

- High sealing efficiency
- Effective sealing during vibration and shock loading
- Extrusion resistance at high pressure

Application Examples

- Earth-moving machines
- Excavators
- Lift platforms

Technical Data

Operating conditions

Pressure:	Up to 70 MPa
Velocity:	Up to 0.5 m/s
Temperature:	-40 °C to +130 °C
Media:	Hydraulic fluids Mineral oil-based hydraulic fluids, water and water/glycol emulsions
Groove type:	Open

Important Note:
The above data are maximum values and cannot be used at the same time. e.g. the maximum operating speed depends on material type, pressure, temperature and gap value.
Temperature range also dependent on medium.

■ Installation Recommendation

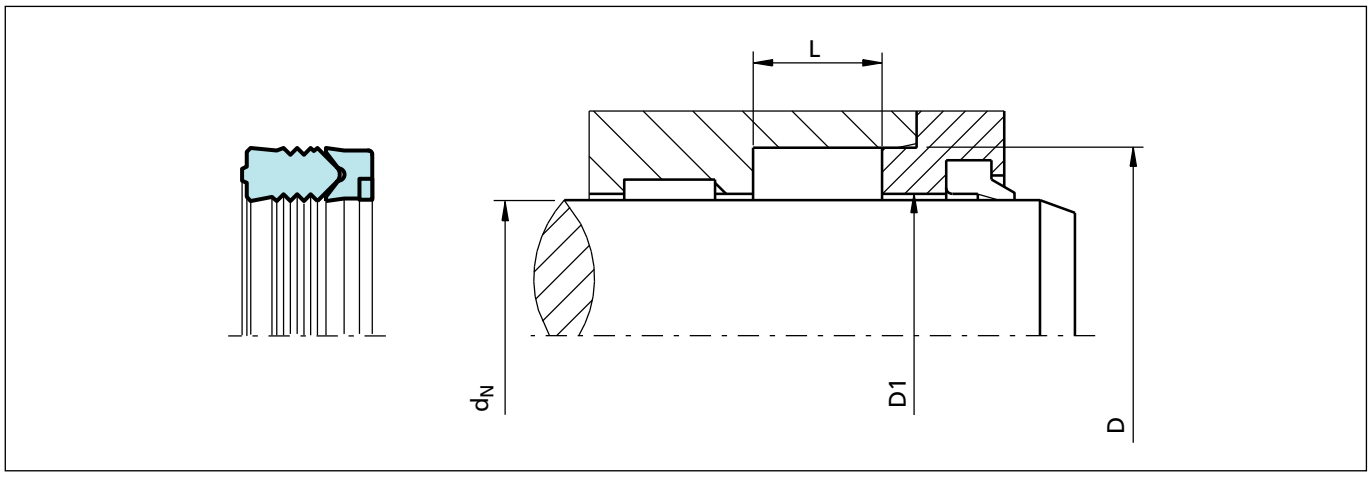

Figure 35 Installation drawing

Ordering Example

Selemaster RCK
Rod diameter: d_N = 50.0 mm
Groove diameter: D = 65.0 mm
Groove width E = 24.5 mm
TSS Part No.: RCK100500
Material code: N8C0 standard
Polypac Ref.: SM 255196/1AX

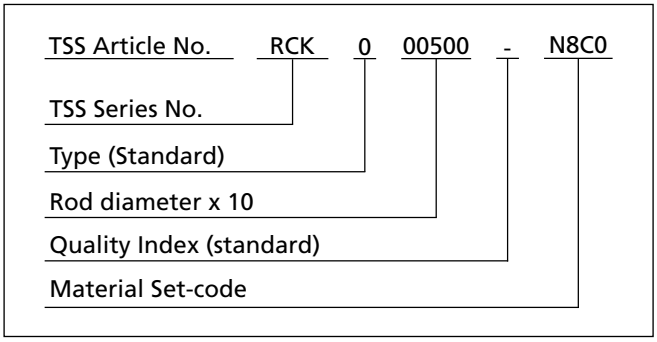

Table XXVIII Installation dimensions / TSS Article No.

Rod Dia.	Groove Dia.	Groove Width	Dia.		TSS Article No. Standard	Description
d_N h9	D H10	L +0.4	D_1 +/-0.1			
15.00	27.00	20.00	15.40		RCK000150-N8C0	SM 106059/1AX
20.00	33.00	20.00	20.40		RCK000200-N8C0	SM 129078/1AX
22.00	35.00	20.00	22.40		RCK000220-N8C0	SM 137086/1AX
25.00	38.00	20.00	25.40		RCK000250-N8C0	SM 149098/1AX
28.00	41.00	20.00	28.40		RCK000280-N8C0	SM 161110/1AX
30.00	43.00	20.00	30.40		RCK000300-N8C0	SM 169118/1AX
32.00	47.00	22.50	32.40		RCK000320-N8C0	SM 185125/1AX
35.00	45.00	25.60	35.40		RCK000350-N8C0	SM 177137/1AX
35.00	47.00	22.50	35.40		RCK100350-N8C0	SM 185137/1AX

^ Available upon request

Rod Dia.	Groove Dia.	Groove Width	Dia.		TSS Article No. Standard	Description
d_N h9	D H10	L +0.4	D_1 +/-0.1			
35.00	50.00	22.50	35.40		RCK200350-N8C0	SM 196137/1AX
36.00	51.00	22.50	36.40		RCK000360-N8C0	SM 200141/1AX
38.10	50.80	23.90	38.50		RCK000381-N8C0	SM 200150/1AX
40.00	52.00	22.50	40.40		RCK200400-N8C0	SM 204157/1AX
40.00	55.00	22.60	40.40		RCK100400-N8C0	SM 216157/1AX
40.00	60.00	30.00	40.40		RCK000400-N8C0	SM 236157/1AX
45.00	60.00	22.50	45.40		RCK000450-N8C0	SM 236177/1AX
45.00	65.00	28.00	45.40		RCK100450-N8C0	SM 255177/1AX
50.00	63.00	20.00	50.40		RCK000500-N8C0	SM 248196/1AX
50.00	65.00	24.50	50.40		RCK100500-N8C0	SM 255196/1AX
50.00	65.00	26.50	50.40	^	RCK200500-N8C0	SM 255196/2AX
50.00	65.00	22.50	50.40		RCK300500-N8C0	SM 255196/1BX
50.00	70.00	30.00	50.40		RCK400500-N8C0	SM 275196/1BX
50.00	70.00	31.90	50.40		RCK500500-N8C0	SM 275196/1AX
50.80	66.67	24.90	51.20		RCK000508-N8C0	SM 262200/1AX
55.00	70.00	25.00	55.40		RCK000550-N8C0	SM 275216/1AX
55.00	70.00	22.50	55.40		RCK100550-N8C0	SM 275216/2AX
55.00	75.00	32.00	55.40		RCK200550-N8C0	SM 295216/1AX
55.00	75.00	30.00	55.40		RCK300550-N8C0	SM 295216/2AX
56.00	71.00	25.00	56.40	^	RCK000560-N8C0	SM 279220/1AX
56.00	76.00	28.00	56.40		RCK100560-N8C0	SM 299220/1AX
60.00	75.00	25.00	60.40		RCK000600-N8C0	SM 295236/1AX
60.00	75.00	22.50	60.40		RCK100600-N8C0	SM 295236/2AX
60.00	77.00	27.00	60.40		RCK200600-N8C0	SM 303236/1AX
60.00	80.00	34.90	40.40		RCK300600-N8C0	SM 314236/1AX
63.00	83.00	29.00	63.40	^	RCK000630-N8C0	SM 326248/1AX
63.00	83.00	27.00	63.40		RCK100630-N8C0	SM 326248/1BX
63.50	82.55	26.60	63.90		RCK000635-N8C0	SM 325250/1AX
65.00	85.00	29.00	65.40		RCK000650-N8C0	SM 334255/1AX
70.00	83.00	25.00	70.40		RCK000700-N8C0	SM 326275/1AX
70.00	85.00	25.00	70.40		RCK200700-N8C0	SM 334275/1BX
70.00	85.00	22.50	70.40		RCK100700-N8C0	SM 334275/1AX
70.00	90.00	30.00	70.40		RCK300700-N8C0	SM 354275/1AX
70.00	90.00	31.90	70.40		RCK400700-N8C0	SM 354275/2AX
75.00	95.00	30.00	75.40		RCK100750-N8C0	SM 374295/2CX
75.00	95.00	28.00	75.40		RCK000750-N8C0	SM 374295/2AX

^ Available upon request

Rod Dia.	Groove Dia.	Groove Width	Dia.		TSS Article No. Standard	Description
d_N h9	D H10	L +0.4	D_1 +/-0.1			
76.20	95.25	24.60	76.60		RCK000762-N8C0	SM 375300/1AX
76.50	96.50	32.50	76.90		RCK000765-N8C0	SM 379301/1AX
80.00	100.00	30.00	80.40		RCK000800-N8C0	SM 393314/1AX
85.00	98.00	25.00	85.40		RCK000850-N8C0	SM 385334/1AX
85.00	105.00	30.00	85.40		RCK100850-N8C0	SM 413334/1AX
90.00	105.00	33.50	90.40		RCK100900-N8C0	SM 413354/1BX
90.00	105.00	25.00	90.40		RCK000900-N8C0	SM 413354/1AX
90.00	110.00	32.50	90.40		RCK300900-N8C0	SM 433354/2BX
90.00	110.00	30.00	90.40		RCK200900-N8C0	SM 433354/1AX
95.00	115.00	28.00	95.40		RCK000950-N8C0	SM 452374/1AX
100.00	114.30	24.20	100.40		RCK001000-N8C0	SM 450393/1AX
100.00	120.00	30.00	100.40		RCK101000-N8C0	SM 472393/1AX
105.00	118.00	25.00	105.40		RCK001050-N8C0	SM 464413/1AX
105.00	120.00	34.00	105.40		RCK101050-N8C0	SM 472413/1AX
110.00	130.00	32.50	110.40		RCK001100-N8C0	SM 511433/1AX
110.00	132.00	36.50	110.40		RCK101100-N8C0	SM 519433/1AX
115.00	130.00	30.00	115.70		RCK001150-N8C0	SM 511452/1AX
115.00	130.00	22.50	115.70		RCK101150-N8C0	SM 511452/2AX
120.00	135.00	22.50	120.70		RCK001200-N8C0	SM 531472/1AX
120.00	140.00	30.00	120.70	^	RCK101200-N8C0	SM 551472/1AX
125.00	145.00	29.60	125.70		RCK001250-N8C0	SM 570492/1AX
127.00	142.00	22.50	127.40		RCK001270-N8C0	SM 559500/1AX
130.00	150.00	28.00	130.70	^	RCK001300-N8C0	SM 590511/1AX
135.00	155.00	28.00	135.70		RCK001350-N8C0	SM 610531/1AX
140.00	160.00	28.00	140.70		RCK001400-N8C0	SM 629551/1AX
145.00	165.00	28.00	145.70		RCK001450-N8C0	SM 649570/1AX
150.00	170.00	28.00	150.70		RCK001500-N8C0	SM 669590/1AX
155.00	175.00	28.00	155.70		RCK001550-N8C0	SM 688610/1AX
158.50	180.00	28.00	159.20	^	RCK001585-N8C0	SM 708624/1AX
160.00	180.00	28.00	160.70		RCK001600-N8C0	SM 708629/1AX
165.00	185.00	30.00	165.70		RCK001650-N8C0	SM 729649/1AX
170.00	195.00	35.00	170.70		RCK001700-N8C0	SM 767669/1AX
180.00	205.00	35.00	180.70		RCK001800-N8C0	SM 807708/1AX
185.00	200.00	22.50	185.70		RCK001850-N8C0	SM 787728/2AX
185.00	210.00	35.00	210.70		RCK101850-N8C0	SM 826728/1AX
190.00	215.00	35.00	190.70		RCK001900-N8C0	SM 846748/2AX

^ Available upon request

Rod Dia.	Groove Dia.	Groove Width	Dia.		TSS Article No. Standard	Description
d_N h9	D H10	L +0.4	D_1 +/-0.1			
200.00	225.00	35.00	200.70		RCK002000-N8C0	SM 885787/1AX
215.00	240.00	35.00	215.70	^	RCK002150-N8C0	SM 944846/1AX
220.00	245.00	35.00	220.70		RCK002200-N8C0	SM 964866/1AX
225.00	250.00	35.00	225.70		RCK002250-N8C0	SM 984886/1AX
230.00	255.00	35.00	230.70		RCK002300-N8C0	SM 1003905/1AX
240.00	265.00	35.00	240.70		RCK002400-N8C0	SM 1043945/1AX
250.00	275.00	35.00	250.70		RCK002500-N8C0	SM 1082984/1AX
260.00	280.00	30.00	260.70		RCK002600-N8C0	SM 11021024/1AX
265.00	290.00	35.00	265.70		RCK002650-N8C0	SM 11411043/1AX
275.00	300.00	35.00	275.70		RCK002750-N8C0	SM 11811082/1AX
280.00	305.00	35.00	280.70		RCK002800-N8C0	SM 12011102/1AX
300.00	325.00	35.00	300.70		RCK003000-N8C0	SM 12791181/1AX
335.00	360.00	35.00	335.70		RCK003350-N8C0	SM 14171318/1AX

^ Available upon request

POLYPAC® - Balsele

Single Acting

Compact Seal

Without and with Back-up Ring

Material:
Fabric Reinforced NBR + POM

■ Balsele

Description

The Balsele is a compact rod seal consisting of an elastomeric sealing element and an integrated fabric reinforced base.

Due to the radial pre-load an excellent sealing performance will be achieved even at low pressures. The fabric reinforced base prevents the seal from extrusion. Where extrusion gaps are greater than those specified or for higher pressure conditions the serie B/NEI with incorporated anti-extrusion ring shall be selected.

Design

1) Sealing element manufactured from a specially developed nitrile compound particularly resistant to compression set. The sealing lips are produced to give optimum efficiency and wear resistance.
2) The reinforced base of the seal element is of cotton fabric impregnated with nitrile elastomer and vulcanised with the sealing element 1, thus forming an integral component.
3) Guide rings or antiextrusion rings are made from acetal resin. As previously described these rings maintain the seal in the optimum position for maximum performance, and minimise all possible extrusion gaps.

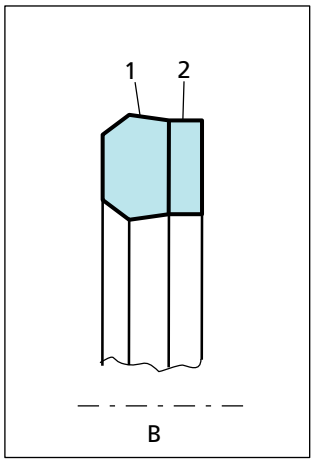

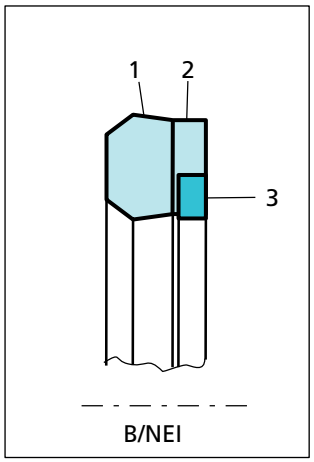

Advantages

- Small cross sections
- Good chemical resistance
- Large size range
- No hydrolyses problems
- Wide temperature range

Application Examples

- Standard hydraulic cylinders (low to medium duty)
- Mobile hydraulic
- Water based fluids equipment
- After market
- Presses

Technical Data

Operating conditions

Pressure:	Up to 25 MPa (Type B) Up to 40 MPa (Type B/NEI)
Velocity:	Up to 0.5 m/s
Temperature:	- 30 °C to +130 °C
Media:	Mineral oil, water, air

Important Note:
The above data are maximum values and cannot be used at the same time. e.g. the maximum operating speed depends on material type, pressure, temperature and gap value.
Temperature range also dependent on medium.

Materials

For type B:
NBR + cotton fabric
Material code N8C0

for type B/NEI:
NBR + cotton fabric
Back-up Ring material POM
Material code N8CO

Design Instructions

Lead in chamfers

In order to avoid damage to the Balsele during installation, lead in chamfers of min. 5 x 20° must be provided on the rods.

Rod Diameter	Lead in Chamfer
0 - 100	5 x 20°
101 - 200	7 x 20°
201 - 400	10 x 20°

Surface roughness

Parameter	Mating Surface µm	Groove Surface µm
R_{max}	0.63 - 2.50	< 16.0
$R_{z\ DIN}$	0.40 - 1.60	< 10.0
R_a	0.05 - 0.20	< 1.6

The material contact area R_{mr} should be approx. 50 to 70%, determined at a cut depth c = 0.25 x R_z, relative to a reference line of $C_{ref.}$ 5%.

Clearance

Operating max. Pressure MPa	Radial Clearance S max.
16	0.20
25	0.10

For Type B/NEI (with Back-up Ring) the values can be double and with similar gap measure Smax. = 0.10 a pressure of 40 MPa can be tightened.

■ Installation Recommendation

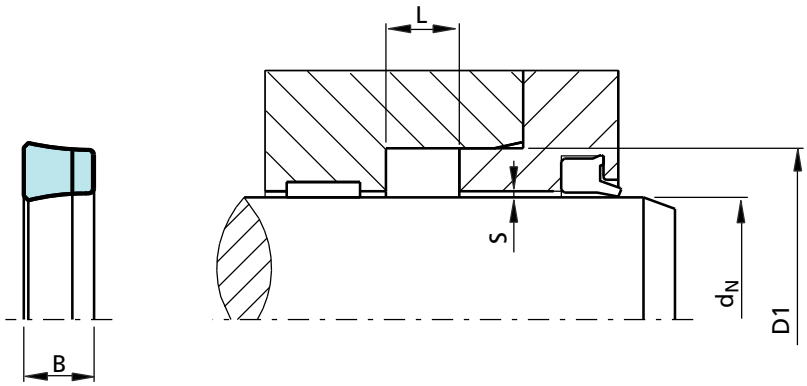

Figure 36 Installation drawing

Ordering example

Balsele Type B
Rod diameter: d_N = 6.0 mm
Groove diameter: D1 = 10.0 mm
Groove width L = 5.0 mm
TSS Part No.: RUM000060 -
Compound: N8C0 (NBR + cotton fabric)

TSS Article No. RUM 0 0 0060 - N8C0

- TSS Series No.
- Design code
- Execution Mark
- Rod diameter x 10
- Quality Index (Standard)
- Material code (Seal ring)

Polypac Ref. No.: B 039023

Table XXIX Installation dimensions / TSS Article No.

Note	Rod Diameter	Groove Diameter	Groove Width	Seal Width	TSS Article No.	Description
	d_N h11	D_1 H11	L +0.1	B		
*	4.76	12.70	6.40	5.75	RUM000047-N8C0	B 050018
*	6.00	10.00	5.00	4.00	RUM000060-N8C0	B 039023
*	**6.00**	**14.00**	**6.40**	**5.90**	**RUM100060-N8C0**	**B 055024**
*	6.35	14.28	6.85	6.30	RUM000063-N8C0	B 056025
*	8.00	15.00	6.40	5.90	RUM000080-N8C0	B 059031
*	10.00	17.00	6.40	5.90	RUM100100-N8C0	B 066039
*	11.11	20.63	7.65	7.00	RUM000111-N8C0	B 081043
*	12.00	18.00	7.50	7.00	RUM000120-N8C0	B 070047
*	12.00	19.00	6.30	5.80	RUM100120-N8C0	B 075047

Dimensions printed in **bold** type correspond to ISO/DIN 5597 and ISO 5597/1. * Split groove
Additional dimensions can be delivered on request.

Note	Rod Diameter	Groove Diameter	Groove Width	Seal Width	TSS Article No.	Description
	d_N h11	D_1 H11	L +0.1	B		
*	**12.00**	**20.00**	**6.40**	**5.80**	**RUM200120-N8C0**	**B 078047**
*	12.70	19.05	5.25	4.80	RUM000127-N8C0	B 075050
*	12.70	20.63	6.85	6.30	RUM100127-N8C0	B 081050
*	12.70	22.22	7.65	7.00	RUM200127-N8C0	B 087050
*	14.00	22.00	6.50	5.90	RUM000140-N8C0	B 086055
*	14.28	23.81	7.65	7.00	RUM000142-N8C0	B 093056
*	15.00	23.00	6.40	5.80	RUM000150-N8C0	B 090059
*	15.87	22.22	5.25	4.80	RUM000158-N8C0	B 087062
*	15.87	25.40	7.65	7.00	RUM100158-N8C0	B 100062
*	**16.00**	**24.00**	**6.40**	**5.90**	**RUM000160-N8C0**	**B 094063/1**
*	16.00	24.00	7.00	6.50	RUM100160-N8C0	B 094063
*	17.46	30.16	10.00	9.20	RUM000174-N8C0	B 118068
*	18.00	25.00	8.00	7.30	RUM100180-N8C0	B 098070
*	**18.00**	**26.00**	**6.40**	**5.80**	**RUM200180-N8C0**	**B 102070/1**
*	18.00	26.00	7.00	6.50	RUM300180-N8C0	B 102070
*	18.00	28.00	6.30	5.70	RUM400180-N8C0	B 110070
*	19.05	28.58	9.00	8.00	RUM100190-N8C0	B 112075
*	19.05	31.75	8.50	7.70	RUM000190-N8C0	B 125075/1
*	20.00	27.00	6.50	5.90	RUM000200-N8C0	B 106078
*	**20.00**	**28.00**	**6.30**	**5.70**	**RUM200200-N8C0**	**B 110078/1**
*	20.00	28.00	7.00	6.50	RUM100200-N8C0	B 110078
*	20.00	30.00	8.50	7.60	RUM300200-N8C0	B 118078
*	20.00	35.00	11.50	10.60	RUM400200-N8C0	B 137078
*	20.63	33.33	10.00	9.20	RUM000206-N8C0	B 131081
*	22.00	30.00	6.50	5.90	RUM000220-N8C0	B 118086/1
*	22.00	30.00	7.00	6.50	RUM100220-N8C0	B 118086
*	22.00	35.00	10.00	9.20	RUM400220-N8C0	B 137086
*	22.22	31.75	9.20	8.60	RUM000222-N8C0	B 125087
*	23.81	36.51	10.00	9.20	RUM000238-N8C0	B 143093
*	24.00	32.00	7.50	6.90	RUM000240-N8C0	B 125094
*	24.00	34.00	6.50	5.90	RUM100240-N8C0	B 134094
	25.00	**33.00**	**6.40**	**5.80**	**RUM000250-N8C0**	**B 129098/1**
*	25.00	35.00	9.00	8.40	RUM100250-N8C0	B 137098
*	25.00	38.00	10.00	9.15	RUM200250-N8C0	B 149098
*	25.00	44.00	12.50	11.40	RUM300250-N8C0	B 173098
*	25.40	31.75	5.25	4.70	RUM000254-N8C0	B 125100

Dimensions printed in **bold** type correspond to ISO/DIN 5597 and ISO 5597/1. * Split groove
Additional dimensions can be delivered on request.

Note	Rod Diameter	Groove Diameter	Groove Width	Seal Width	TSS Article No.	Description
	d_N h11	D_1 H11	L +0.1	B		
*	25.40	34.92	6.85	6.20	RUM100254-N8C0	B 137100
*	25.40	38.10	10.00	9.20	RUM200254-N8C0	B 150100
*	25.40	41.27	11.60	10.70	RUM300254-N8C0	B 162100
*	26.00	40.00	10.00	9.20	RUM000260-N8C0	B 157102/1
*	27.00	35.00	6.50	5.90	RUM000270-N8C0	B 137106
	28.00	**36.00**	**6.40**	**5.80**	**RUM000280-N8C0**	**B 141110**
*	28.19	39.68	8.00	7.30	RUM000281-N8C0	B 156111
*	28.57	41.27	10.00	9.20	RUM100285-N8C0	B 162112
*	28.57	44.45	11.60	10.70	RUM200285-N8C0	B 175112
	30.00	37.50	6.50	6.00	RUM100300-N8C0	B 147118
	30.00	38.00	6.40	5.80	RUM000300-N8C0	B 149118
*	30.00	40.00	7.50	6.80	RUM300300-N8C0	B 157118
*	30.00	41.60	8.00	7.20	RUM500300-N8C0	B 164118
*	30.00	45.00	9.00	8.50	RUM600300-N8C0	B 177118/1
*	30.00	50.00	14.50	13.50	RUM700300-N8C0	B 196118
*	31.75	47.62	11.60	10.60	RUM200317-N8C0	B 187125
	32.00	40.00	6.30	5.80	RUM000320-N8C0	B 157125/1
*	32.00	40.00	9.00	8.50	RUM100320-N8C0	B 157125
*	34.92	50.80	10.00	9.10	RUM100349-N8C0	B 200137/1
*	34.92	50.80	11.60	10.60	RUM200349-N8C0	B 200137/2
	35.00	43.00	6.50	6.00	RUM000350-N8C0	B 169137
*	35.00	45.00	8.00	7.20	RUM100350-N8C0	B 177137/5
*	35.00	45.00	13.50	12.80	RUM300350-N8C0	B 177137/2
*	35.00	50.00	11.50	10.60	RUM400350-N8C0	B 196137
	36.00	43.00	6.50	6.00	RUM000360-N8C0	B 169141
	36.00	44.00	6.40	5.90	RUM100360-N8C0	B 173141
*	37.72	50.80	9.00	8.20	RUM000377-N8C0	B 200148
*	38.00	50.00	9.50	8.80	RUM000380-N8C0	B 196149
*	38.10	50.80	12.40	11.90	RUM100381-N8C0	B 200150/1
*	38.10	53.97	11.50	10.50	RUM400381-N8C0	B 212150/1
*	38.10	53.97	12.83	12.00	RUM500381-N8C0	B 212150/2
	40.00	48.00	6.50	6.00	RUM000400-N8C0	B 188157
	40.00	**50.00**	**8.00**	**7.40**	**RUM100400-N8C0**	**B 196157/3**
*	40.00	50.00	11.00	10.30	RUM300400-N8C0	B 196157
*	40.00	50.00	13.50	12.80	RUM400400-N8C0	B 196157/2
*	40.00	60.00	14.50	13.30	RUM700400-N8C0	B 236157

Dimensions printed in **bold** type correspond to ISO/DIN 5597 and ISO 5597/1. * Split groove
Additional dimensions can be delivered on request.

Note	Rod Diameter	Groove Diameter	Groove Width	Seal Width	TSS Article No.	Description
	d_N h11	D_1 H11	L +0.1	B		
	41.27	57.12	11.60	10.70	RUM000412-N8C0	B 225162
	42.00	50.00	6.40	6.00	RUM000420-N8C0	B 196165
*	42.92	55.50	8.90	8.10	RUM000429-N8C0	B 218169
	43.00	53.00	9.00	8.40	RUM000430-N8C0	B 208169
	44.00	53.00	8.00	7.30	RUM000440-N8C0	B 208173
*	44.45	60.32	11.60	10.70	RUM100444-N8C0	B 237175
*	44.45	61.91	11.60	10.60	RUM200444-N8C0	B 243175
	45.00	53.00	6.50	6.00	RUM000450-N8C0	B 208177
	45.00	**55.00**	**8.00**	**7.30**	**RUM100450-N8C0**	**B 216177**
*	45.00	63.00	11.00	10.00	RUM500450-N8C0	B 248177
*	45.00	65.00	14.50	13.30	RUM600450-N8C0	B 255177
	45.97	55.37	8.33	7.60	RUM000459-N8C0	B 218181
	46.00	56.00	8.00	7.30	RUM100460-N8C0	B 220181
*	47.23	60.32	10.00	9.20	RUM000472-N8C0	B 237186
*	47.62	63.50	11.50	10.60	RUM000476-N8C0	B 250187
*	48.00	60.00	7.00	6.30	RUM000480-N8C0	B 236188
*	50.00	58.00	12.50	12.00	RUM000500-N8C0	B 228196
	50.00	**60.00**	**8.00**	**7.30**	**RUM100500-N8C0**	**B 236196**
*	50.00	60.00	10.00	9.30	RUM200500-N8C0	B 236196/1
*	50.00	62.00	9.50	8.50	RUM300500-N8C0	B 244196/1
*	50.00	64.50	11.50	10.50	RUM400500-N8C0	B 254196
*	50.00	70.00	14.50	13.30	RUM600500-N8C0	B 275196
	50.80	60.35	11.00	10.30	RUM000508-N8C0	B 237200
*	50.80	66.67	11.50	10.50	RUM100508-N8C0	B 262200
*	53.97	73.02	14.80	13.80	RUM000539-N8C0	B 287212
	55.00	70.00	10.50	9.60	RUM200550-N8C0	B 275216
*	55.00	75.00	14.50	13.30	RUM300550-N8C0	B 295216
	56.00	66.00	8.00	7.30	RUM000560-N8C0	B 259220
*	56.00	76.00	14.50	13.40	RUM200560-N8C0	B 299220
	57.00	67.00	8.00	7.30	RUM000570-N8C0	B 263224
	57.15	69.85	10.00	9.20	RUM000571-N8C0	B 275225
*	57.15	73.02	11.50	10.60	RUM100571-N8C0	B 287225
*	57.15	76.20	10.00	8.90	RUM200571-N8C0	B 300225
*	57.15	76.20	13.50	12.40	RUM300571-N8C0	B 300225/1
*	57.15	76.20	14.28	13.20	RUM400571-N8C0	B 300225/2
	60.00	69.50	7.00	6.40	RUM000600-N8C0	B 273236

Dimensions printed in **bold** type correspond to ISO/DIN 5597 and ISO 5597/1. * Split groove
Additional dimensions can be delivered on request.

Note	Rod Diameter	Groove Diameter	Groove Width	Seal Width	TSS Article No.	Description
	d_N h11	D_1 H11	L +0.1	B		
	60.00	70.00	8.00	7.50	RUM100600-N8C0	B 275236
	60.00	71.00	9.60	9.00	RUM400600-N8C0	B 279236
	60.00	72.00	10.00	9.20	RUM500600-N8C0	B 283236
	60.00	75.00	13.00	12.10	RUM600600-N8C0	B 295236
*	60.00	80.00	14.50	13.50	RUM700600-N8C0	B 314236
*	60.32	79.37	14.80	13.80	RUM000603-N8C0	B 312237
	61.00	69.00	8.50	7.90	RUM000610-N8C0	B 271240
	63.00	75.00	9.60	8.80	RUM000630-N8C0	B 295248/1
*	63.00	83.00	14.50	13.30	RUM300630-N8C0	B 326248
*	63.50	82.55	14.28	13.13	RUM200635-N8C0	B 325250/1
	65.00	75.00	8.50	7.80	RUM000650-N8C0	B 295255/1
	65.00	75.00	13.50	12.30	RUM100650-N8C0	B 295255
	65.00	77.00	9.60	8.80	RUM200650-N8C0	B 303255
	65.00	80.00	11.50	10.60	RUM300650-N8C0	B 314255
*	65.00	85.00	14.50	13.50	RUM600650-N8C0	B 334255
*	65.00	95.00	17.50	15.80	RUM500650-N8C0	B 374255
*	66.00	80.00	11.00	10.10	RUM000660-N8C0	B 314259
*	66.67	85.72	14.80	13.70	RUM000667-N8C0	B 337262
	68.00	76.00	8.00	7.40	RUM000680-N8C0	B 299267
	70.00	80.00	8.00	7.30	RUM100700-N8C0	B 314275/1
	70.00	82.00	9.60	8.80	RUM300700-N8C0	B 322275/1
	70.00	84.00	12.50	11.20	RUM500700-N8C0	B 330275
	70.00	85.00	12.00	11.00	RUM600700-N8C0	B 334275/1
*	70.00	90.00	14.50	13.50	RUM800700-N8C0	B 354275
*	73.02	88.90	12.50	11.50	RUM000730-N8C0	B 350287
	75.00	85.00	8.00	7.30	RUM000750-N8C0	B 334295/1
	75.00	89.50	11.50	10.50	RUM200750-N8C0	B 352295
	75.00	90.00	11.50	10.60	RUM300750-N8C0	B 354295
*	75.00	95.00	11.00	10.00	RUM500750-N8C0	B 374295/1
	76.00	84.00	8.50	7.90	RUM000760-N8C0	B 330299
	76.20	88.90	9.40	8.70	RUM000762-N8C0	B 350300
*	76.20	95.25	14.80	13.70	RUM200762-N8C0	B 375300
	77.00	87.00	8.00	7.30	RUM000770-N8C0	B 342303
	79.00	88.50	7.00	6.40	RUM000790-N8C0	B 348311
	80.00	90.00	8.00	7.30	RUM000800-N8C0	B 354314
	80.00	92.00	9.60	8.80	RUM100800-N8C0	B 362314

Dimensions printed in **bold** type correspond to ISO/DIN 5597 and ISO 5597/1. * Split groove
Additional dimensions can be delivered on request.

Note	Rod Diameter	Groove Diameter	Groove Width	Seal Width	TSS Article No.	Description
	d_N h11	D_1 H11	L +0.1	B		
	80.00	96.00	10.50	9.60	RUM400800-N8C0	B 377314
	80.00	100.00	14.50	13.40	RUM600800-N8C0	B 393314
	81.00	91.00	8.00	7.30	RUM000810-N8C0	B 358318
	82.55	101.60	14.80	13.70	RUM000825-N8C0	B 400325/1
	84.00	94.00	8.00	7.30	RUM100840-N8C0	B 370330
	85.00	95.00	8.00	7.30	RUM000850-N8C0	B 374334
	85.00	95.00	8.50	7.80	RUM100850-N8C0	B 374334/1
	85.00	97.00	9.60	9.00	RUM200850-N8C0	B 381334
	85.00	100.00	12.00	10.80	RUM300850-N8C0	B 393334/1
	85.00	105.00	14.50	13.40	RUM400850-N8C0	B 413334
*	85.00	110.00	13.50	12.20	RUM500850-N8C0	B 433334
*	85.72	104.77	14.80	13.80	RUM000857-N8C0	B 412337
*	85.72	111.12	19.50	18.20	RUM100857-N8C0	B 437337
	88.00	96.00	8.00	7.50	RUM000880-N8C0	B 377346
	88.90	101.60	10.00	9.20	RUM000889-N8C0	B 400350
*	88.90	107.95	12.70	11.60	RUM100889-N8C0	B 425350
	90.00	102.00	9.60	8.80	RUM100900-N8C0	B 401354
	90.00	110.00	12.50	11.40	RUM500900-N8C0	B 433354
	91.00	99.00	8.50	7.90	RUM000910-N8C0	B 389358
*	92.07	117.45	13.20	12.00	RUM100920-N8C0	B 462362/1
	95.00	105.00	11.00	10.30	RUM000950-N8C0	B 413374
	95.00	107.00	12.50	11.70	RUM100950-N8C0	B 421374
	95.00	110.00	12.50	11.36	RUM200950-N8C0	B 433374
	95.25	114.30	13.50	12.40	RUM000952-N8C0	B 450375
*	95.25	120.65	19.50	18.20	RUM100952-N8C0	B 475375
	96.00	105.00	8.50	7.90	RUM000960-N8C0	B 413377
	96.00	108.00	12.50	11.70	RUM100960-N8C0	B 425377
	97.00	108.00	12.50	11.80	RUM000970-N8C0	B 425381
	98.00	107.50	7.00	6.20	RUM000980-N8C0	B 423385
	100.00	113.00	13.50	12.70	RUM001000-N8C0	B 444393
	100.00	115.00	11.50	10.60	RUM101000-N8C0	B 452393/1
	100.00	120.00	12.00	11.20	RUM301000-N8C0	B 472393/1
	100.00	120.00	14.50	13.40	RUM401000-N8C0	B 472393
	101.50	123.82	17.18	16.00	RUM001015-N8C0	B 487400
	101.60	127.00	19.50	18.00	RUM001016-N8C0	B 500400
	103.00	115.00	12.50	11.80	RUM001030-N8C0	B 452405

Dimensions printed in **bold** type correspond to ISO/DIN 5597 and ISO 5597/1. * Split groove
Additional dimensions can be delivered on request.

Note	Rod Diameter	Groove Diameter	Groove Width	Seal Width	TSS Article No.	Description
	d_N h11	D_1 H11	L +0.1	B		
	104.00	120.00	12.00	11.20	RUM001040-N8C0	B 472409
	104.00	130.00	19.50	18.00	RUM101040-N8C0	B 511409
	105.00	115.00	11.00	10.00	RUM001050-N8C0	B 452413
	105.00	117.00	12.50	11.80	RUM101050-N8C0	B 460413
	105.00	120.00	12.00	11.00	RUM201050-N8C0	B 472413
	105.00	125.00	12.50	11.40	RUM301050-N8C0	B 492413
	106.00	116.00	8.50	7.80	RUM001060-N8C0	B 457417
	107.00	115.00	8.00	7.40	RUM001070-N8C0	B 452421
	107.95	133.35	19.00	17.70	RUM001079-N8C0	B 525425
	110.00	125.00	12.00	11.20	RUM001100-N8C0	B 492433
	110.00	140.00	16.50	15.00	RUM301100-N8C0	B 551433
	114.30	133.35	12.40	11.40	RUM001143-N8C0	B 525450
	114.30	139.70	19.50	18.00	RUM101143-N8C0	B 550450
	115.00	125.00	8.00	7.40	RUM001150-N8C0	B 492452
	115.00	135.00	16.00	14.80	RUM101150-N8C0	B 531452
	118.00	130.00	12.50	11.80	RUM001180-N8C0	B 511464
	120.00	130.00	8.00	7.40	RUM001200-N8C0	B 511472
	120.00	132.70	10.00	9.20	RUM101200-N8C0	B 522472
	120.00	140.00	12.50	11.40	RUM301200-N8C0	B 551472
	120.65	146.05	19.50	18.20	RUM001206-N8C0	B 575475
	123.00	133.00	8.00	7.40	RUM001230-N8C0	B 523484
	125.00	135.00	8.50	7.80	RUM001250-N8C0	B 531492
	125.00	140.00	12.00	11.00	RUM101250-N8C0	B 551492
	126.00	134.00	8.00	7.50	RUM001260-N8C0	B 527496
	126.00	136.00	8.50	7.80	RUM101260-N8C0	B 535496
	127.00	139.70	10.00	8.70	RUM001270-N8C0	B 550500
	127.00	152.40	19.50	18.20	RUM201270-N8C0	B 600500
	130.00	140.00	8.00	7.40	RUM001300-N8C0	B 551511
	131.00	144.00	13.50	12.70	RUM001310-N8C0	B 566515
	133.35	158.75	14.00	12.60	RUM001333-N8C0	B 625525/1
	139.70	165.10	19.50	18.20	RUM001397-N8C0	B 650550
	140.00	155.00	13.00	12.00	RUM001400-N8C0	B 610551
	146.05	171.45	19.50	18.20	RUM101460-N8C0	B 675575
	152.40	177.80	19.50	18.20	RUM001524-N8C0	B 700600
	152.40	184.15	25.80	24.20	RUM101524-N8C0	B 725600
	155.00	170.00	9.50	8.55	RUM001550-N8C0	B 669610

Dimensions printed in **bold** type correspond to ISO/DIN 5597 and ISO 5597/1. * Split groove
Additional dimensions can be delivered on request.

Note	Rod Diameter	Groove Diameter	Groove Width	Seal Width	TSS Article No.	Description
	d_N h11	D_1 H11	L +0.1	B		
	158.75	190.50	25.80	24.20	RUM001587-N8C0	B 750625
	160.00	174.00	11.50	10.60	RUM001600-N8C0	B 685629
	163.00	178.00	13.00	12.00	RUM001630-N8C0	B 700641
	165.10	177.80	10.00	9.20	RUM001651-N8C0	B 700650
	165.10	196.85	25.80	24.20	RUM101651-N8C0	B 775650
	170.00	182.70	10.00	9.20	RUM001700-N8C0	B 719669
	171.45	203.20	25.80	24.20	RUM001714-N8C0	B 800675
	175.00	200.00	14.50	13.10	RUM001750-N8C0	B 787688
	177.80	203.20	22.70	21.40	RUM001778-N8C0	B 800700
	180.00	195.00	12.50	11.50	RUM001800-N8C0	B 767708
	184.15	215.90	25.80	24.20	RUM001841-N8C0	B 850725
	187.00	202.00	11.50	10.60	RUM001870-N8C0	B 795736
	188.00	203.00	13.00	12.00	RUM001880-N8C0	B 799740
	190.50	222.25	25.80	24.20	RUM001905-N8C0	B 875750
	196.00	208.70	9.50	8.70	RUM001960-N8C0	B 821771
	196.85	228.60	25.80	24.20	RUM001968-N8C0	B 900775
	203.20	235.00	25.80	24.20	RUM002032-N8C0	B 925800
	214.00	229.00	13.00	12.10	RUM002140-N8C0	B 901842
	215.90	247.65	25.80	24.20	RUM002159-N8C0	B 975850
	222.25	254.00	25.80	24.20	RUM002222-N8C0	B 1000875
	224.00	236.70	9.50	8.70	RUM002240-N8C0	B 931881
	228.60	260.35	25.80	24.20	RUM002286-N8C0	B 1025900
	238.00	258.00	15.50	14.40	RUM002380-N8C0	B 1015937
	240.00	255.00	13.00	12.00	RUM002400-N8C0	B 1003944
	241.30	273.05	25.80	24.20	RUM002413-N8C0	B 1075950
	250.00	290.00	25.40	23.30	RUM002500-N8C0	B 1141984
	254.00	285.75	25.80	24.20	RUM002540-N8C0	B 11251000
	260.35	292.10	25.80	24.20	RUM002603-N8C0	B 11501025
	266.70	298.45	25.80	24.20	RUM002667-N8C0	B 11751050
	273.05	304.80	25.80	24.20	RUM002730-N8C0	B 12001075
	279.40	311.15	25.80	24.20	RUM002794-N8C0	B 12251100
	280.00	320.00	22.50	20.30	RUM002800-N8C0	B 12591102
	285.75	317.50	25.80	24.20	RUM002857-N8C0	B 12501125
	298.45	330.20	25.80	24.20	RUM002984-N8C0	B 13001175
	304.80	336.55	25.80	24.20	RUM003048-N8C0	B 13251200
	318.00	355.00	13.00	11.90	RUM003180-N8C0	B 13191252

Dimensions printed in **bold** type correspond to ISO/DIN 5597 and ISO 5597/1. * Split groove
Additional dimensions can be delivered on request.

Note	Rod Diameter	Groove Diameter	Groove Width	Seal Width	TSS Article No.	Description
	d_N h11	D_1 H11	L +0.1	B		
	320.00	**360.00**	**25.50**	**23.30**	**RUM003200-N8C0**	**B 14171259**
	350.00	385.00	25.40	23.50	RUM003500-N8C0	B 15151377
	375.00	415.00	25.40	23.20	RUM003750-N8C0	B 16331476
	445.00	482.00	35.50	33.50	RUM004450-N8C0	B 19001750

Dimensions printed in **bold** type correspond to ISO/DIN 5597 and ISO 5597/1. * Split groove
Additional dimensions can be delivered on request.

■ Installation Recommendation

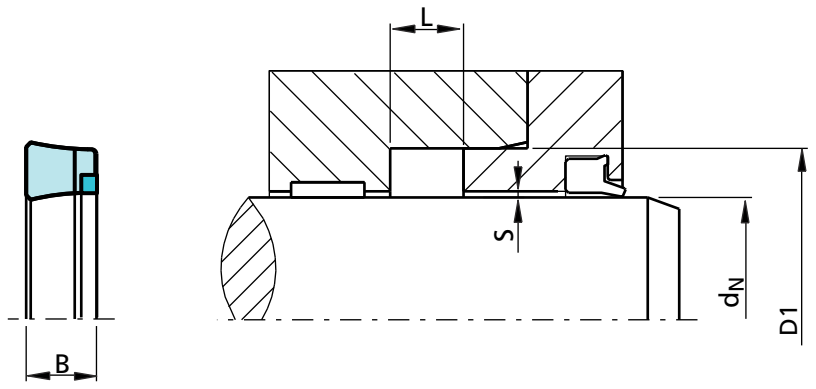

Figure 37 Installation drawing

Ordering example

Balsele Type B/NEI
Rod diameter: d_N = 20.0 mm
Groove diameter: D1 = 28.0 mm
Groove width L = 7.0 mm
TSS Part No.: RUM1E0200 -
Compound: N8CO (NBR + cotton fabric and POM Back-up Ring)

TSS Article No. RUM 1 E 0200 - N8CO

- TSS Series No.
- Design code
- Execution Mark
- Rod diameter x 10
- Quality Index (Standard)
- Material code (Seal ring)

Polypac Ref. No.: B 110078/NEI

Table XXX Installation dimensions / TSS Article No.

Note	Rod Diameter	Groove Diameter	Groove Width	Seal Width	TSS Article No.	Description
	d_N h11	D_1 H11	L +0.1	B		
*	12.00	23.00	7.50	6.80	RUM3E0120-N8C0	B090047/NEI
*	15.00	27.00	7.00	6.30	RUM1E0150-N8C0	B106059/NEI
*	16.00	24.00	7.00	6.50	RUM1E0160-N8C0	B094063/NEI
*	16.00	28.00	7.50	6.90	RUM2E0160-N8C0	B110062/NEI
*	**18.00**	**28.00**	**6.30**	**5.70**	**RUM4E0180-N8C0**	**B110070/NEI**
*	18.00	30.00	7.50	6.90	RUM5E0180-N8C0	B118070/NEI
*	**20.00**	**28.00**	**6.30**	**5.70**	**RUM2E0200-N8C0**	**B110078/1/NEI**
*	20.00	28.00	7.00	6.50	RUM1E0200-N8C0	B110078/NEI
*	20.00	30.00	8.50	7.60	RUM3E0200-N8C0	B118078/NEI

Dimensions printed in **bold** type correspond to ISO/DIN 5597 and ISO 5597/1. * Split groove
Additional dimensions can be delivered on request.

POLYPAC® - Balsele with Back-up Ring

Note	Rod Diameter	Groove Diameter	Groove Width	Seal Width	TSS Article No.	Description
	d_N h11	D_1 H11	L +0.1	B		
*	22.00	30.00	7.00	6.50	RUM1E0220-N8C0	B118086/NEI
*	22.00	32.00	10.00	9.00	RUM2E0220-N8C0	B125086/NEI
*	22.00	34.00	9.50	8.90	RUM3E0220-N8C0	B133086/NEI
*	22.00	35.00	10.00	9.20	RUM4E0220-N8C0	B137086/NEI
*	**25.00**	**33.00**	**6.40**	**5.80**	**RUM0E0250-N8C0**	**B129098/1/NEI**
*	25.00	35.00	9.00	8.40	RUM1E0250-N8C0	B137098/NEI
*	25.00	38.00	10.00	9.15	RUM2E0250-N8C0	B149098/NEI
*	25.40	38.10	10.00	9.20	RUM2E0254-N8C0	B150100/NEI
*	28.00	36.00	6.40	5.80	RUM0E0280-N8C0	B141110/NEI
*	**28.00**	**38.00**	**8.00**	**7.40**	**RUM1E0280-N8C0**	**B149110/1/NEI**
*	28.00	40.00	9.50	8.90	RUM2E0280-N8C0	B157110/NEI
*	28.00	41.00	10.00	9.30	RUM3E0280-N8C0	B161110/NEI
*	28.57	39.68	9.25	8.50	RUM0E0285-N8C0	B156112/NEI
*	30.00	38.00	6.40	5.80	RUM0E0300-N8C0	B149118/NEI
*	30.00	40.00	7.50	6.80	RUM3E0300-N8C0	B157118/NEI
*	30.00	40.00	10.50	9.80	RUM4E0300-N8C0	B157118/1/NEI
*	30.00	45.00	9.00	8.50	RUM6E0300-N8C0	B177118/1/NEI
*	30.00	50.00	14.50	13.50	RUM7E0300-N8C0	B196118/NEI
*	31.75	47.62	11.60	10.60	RUM2E0317-N8C0	B187125/NEI
*	32.00	40.00	6.30	5.80	RUM0E0320-N8C0	B157125/1/NEI
*	32.00	40.00	9.00	8.50	RUM1E0320-N8C0	B157125/NEI
*	32.00	42.00	8.50	7.80	RUM2E0320-N8C0	B165125/1/NEI
*	32.00	42.00	11.00	10.30	RUM3E0320-N8C0	B165125/NEI
*	32.00	45.00	10.00	9.50	RUM4E0320-N8C0	B177125/NEI
*	34.92	50.80	8.50	7.50	RUM0E0349-N8C0	B200137/4/NEI
*	34.92	50.80	11.60	10.60	RUM2E0349-N8C0	B200137/2/NEI
	35.00	43.00	6.50	6.00	RUM0E0350-N8C0	B169137/NEI
*	35.00	45.00	10.50	9.80	RUM2E0350-N8C0	B177137/3/NEI
*	35.00	50.00	11.50	10.60	RUM4E0350-N8C0	B196137/NEI
	36.00	43.00	6.50	6.00	RUM0E0360-N8C0	B169141/NEI
	36.00	44.00	6.40	5.90	RUM1E0360-N8C0	B173141/NEI
*	36.00	46.00	8.50	7.80	RUM2E0360-N8C0	B181141/NEI
*	36.00	48.00	9.50	8.70	RUM3E0360-N8C0	B188141/NEI
*	36.00	48.00	12.00	11.20	RUM4E0360-N8C0	B188141/1/NEI
*	38.10	50.80	10.00	9.22	RUM2E0381-N8C0	B200150/NEI
*	38.10	53.97	10.50	9.50	RUM3E0381-N8C0	B212150/5/NEI

Dimensions printed in **bold** type correspond to ISO/DIN 5597 and ISO 5597/1. * Split groove
Additional dimensions can be delivered on request.

POLYPAC® - Balsele with Back-up Ring

Note	Rod Diameter	Groove Diameter	Groove Width	Seal Width	TSS Article No.	Description
	d_N h11	D_1 H11	L +0.1	B		
	40.00	48.00	6.50	6.00	RUM0E0400-N8C0	B188157/NEI
*	**40.00**	**50.00**	**8.00**	**7.40**	**RUM1E0400-N8C0**	**B196157/3/NEI**
*	40.00	50.00	10.50	9.80	RUM2E0400-N8C0	B196157/1/NEI
*	40.00	50.00	11.00	10.30	RUM3E0400-N8C0	B196157/NEI
*	**40.00**	**55.00**	**8.00**	**7.00**	**RUM5E0400-N8C0**	**B216157/NEI**
*	40.00	55.00	11.00	10.10	RUM6E0400-N8C0	B216157/1/NEI
*	40.00	60.00	14.50	13.30	RUM7E0400-N8C0	B236157/NEI
*	42.00	52.00	9.00	8.40	RUM1E0420-N8C0	B204165/NEI
	44.45	53.97	7.62	7.00	RUM0E0444-N8C0	B212175/1/NEI
*	44.45	60.32	11.60	10.70	RUM1E0444-N8C0	B237175/NEI
	45.00	**55.00**	**8.00**	**7.30**	**RUM1E0450-N8C0**	**B216177/NEI**
	45.00	55.00	11.00	10.00	RUM2E0450-N8C0	B216177/1/NEI
*	45.00	57.00	10.00	9.00	RUM3E0450-N8C0	B224177/NEI
*	45.00	60.00	10.50	9.60	RUM4E0450-N8C0	B236177/NEI
*	45.00	65.00	14.50	13.30	RUM6E0450-N8C0	B255177/NEI
	50.00	**60.00**	**8.00**	**7.30**	**RUM1E0500-N8C0**	**B236196/NEI**
	50.00	60.00	10.00	9.30	RUM2E0500-N8C0	B236196/1/NEI
*	50.00	62.00	9.50	8.50	RUM3E0500-N8C0	B244196/1/NEI
	50.00	65.00	11.00	10.10	RUM5E0500-N8C0	B255196/NEI
*	50.00	70.00	14.50	13.30	RUM6E0500-N8C0	B275196/NEI
*	54.00	66.00	9.50	8.70	RUM0E0540-N8C0	B259212/NEI
	55.00	65.00	8.00	7.30	RUM0E0550-N8C0	B255216/1/NEI
	55.00	65.00	11.00	10.30	RUM1E0550-N8C0	B255216/NEI
*	55.00	70.00	10.50	9.60	RUM2E0550-N8C0	B275216/NEI
*	55.00	75.00	14.50	13.30	RUM3E0550-N8C0	B295216/NEI
*	56.00	71.00	10.50	9.60	RUM1E0560-N8C0	B279220/NEI
*	56.00	76.00	14.50	13.40	RUM2E0560-N8C0	B299220/NEI
	57.15	69.85	10.00	9.20	RUM0E0571-N8C0	B275225/NEI
	60.00	69.50	7.00	6.40	RUM0E0600-N8C0	B273236/NEI
	60.00	70.00	8.00	6.40	RUM1E0600-N8C0	B275236/NEI
	60.00	70.00	11.00	10.30	RUM2E0600-N8C0	B275236/1/NEI
	60.00	70.00	13.00	12.25	RUM3E0600-N8C0	B275236/2/NEI
	60.00	72.00	10.00	9.20	RUM5E0600-N8C0	B283236/NEI
*	60.00	75.00	13.00	12.10	RUM6E0600-N8C0	B295236/NEI
*	60.00	80.00	14.50	13.50	RUM7E0600-N8C0	B314236/NEI
	63.00	75.00	11.00	10.20	RUM1E0630-N8C0	B295248/NEI

Dimensions printed in **bold** type correspond to ISO/DIN 5597 and ISO 5597/1. * Split groove
Additional dimensions can be delivered on request.

POLYPAC® - Balsele with Back-up Ring

Note	Rod Diameter	Groove Diameter	Groove Width	Seal Width	TSS Article No.	Description
	d_N h11	D_1 H11	L +0.1	B		
*	**63.00**	**78.00**	**12.50**	**11.50**	**RUM2E0630-N8C0**	**B307248/NEI**
*	63.00	83.00	14.50	13.30	RUM3E0630-N8C0	B326248/NEI
	63.50	76.20	8.50	7.70	RUM0E0635-N8C0	B300250/NEI
*	63.50	77.78	11.50	10.70	RUM1E0635-N8C0	B306250/NEI
	65.00	75.00	13.50	12.30	RUM1E0650-N8C0	B295255/NEI
	65.00	77.00	9.60	8.80	RUM2E0650-N8C0	B303255/NEI
*	65.00	80.00	11.50	10.60	RUM3E0650-N8C0	B314255/NEI
*	65.00	80.00	12.50	11.50	RUM4E0650-N8C0	B314255/2/NEI
	70.00	80.00	8.00	7.30	RUM0E0700-N8C0	B314275/1/NEI
	70.00	80.00	13.00	12.30	RUM2E0700-N8C0	B314275/NEI
	70.00	82.00	10.50	9.70	RUM4E0700-N8C0	B322275/NEI
	70.00	84.00	12.50	11.20	RUM5E0700-N8C0	B330275/NEI
*	70.00	85.00	12.00	11.00	RUM6E0700-N8C0	B334275/1/NEI
*	**70.00**	**85.00**	**12.50**	**11.50**	**RUM7E0700-N8C0**	**B334275/NEI**
*	70.00	90.00	14.50	13.50	RUM8E0700-N8C0	B354275/NEI
*	72.00	87.00	11.00	10.00	RUM0E0720-N8C0	B342283/NEI
	75.00	85.00	11.00	10.30	RUM1E0750-N8C0	B334295/2/NEI
	75.00	90.00	11.50	10.60	RUM3E0750-N8C0	B354295/NEI
	75.00	90.00	12.80	11.80	RUM4E0750-N8C0	B354295/1/NEI
*	75.00	95.00	14.50	13.50	RUM6E0750-N8C0	B374295/NEI
	80.00	93.00	14.50	13.50	RUM2E0800-N8C0	B366314/NEI
	80.00	95.00	12.00	11.10	RUM3E0800-N8C0	B374314/NEI
	80.00	96.00	10.50	9.60	RUM4E0800-N8C0	B377314/NEI
*	80.00	100.00	12.00	10.80	RUM5E0800-N8C0	B393314/1/NEI
*	80.00	100.00	14.50	13.40	RUM6E0800-N8C0	B393314/NEI
	85.00	95.00	8.00	7.30	RUM0E0850-N8C0	B374334/NEI
	85.00	97.00	9.60	9.00	RUM2E0850-N8C0	B381334/NEI
	85.00	100.00	12.00	10.80	RUM3E0850-N8C0	B393334/1/NEI
*	85.00	105.00	14.50	13.40	RUM4E0850-N8C0	B413334/NEI
*	88.90	114.30	19.50	18.20	RUM2E0889-N8C0	B450350/2/NEI
	90.00	**105.00**	**9.50**	**8.70**	**RUM2E0900-N8C0**	**B413354/NEI**
	90.00	**105.00**	**12.50**	**11.60**	**RUM3E0900-N8C0**	**B413354/1/NEI**
	90.00	106.20	10.80	9.80	RUM4E0900-N8C0	B418354/NEI
*	**90.00**	**110.00**	**12.50**	**11.40**	**RUM5E0900-N8C0**	**B433354/NEI**
*	92.07	111.12	12.50	11.30	RUM0E0920-N8C0	B437362/NEI
	95.00	105.00	11.00	10.30	RUM0E0950-N8C0	B413374/NEI

Dimensions printed in **bold** type correspond to ISO/DIN 5597 and ISO 5597/1. * Split groove
Additional dimensions can be delivered on request.

POLYPAC® - Balsele with Back-up Ring

Note	Rod Diameter	Groove Diameter	Groove Width	Seal Width	TSS Article No.	Description
	d_N h11	D_1 H11	L +0.1	B		
	95.00	112.00	12.00	11.10	RUM3E0950-N8C0	B441374/NEI
*	95.00	115.00	14.50	13.30	RUM4E0950-N8C0	B452374/NEI
	100.00	113.00	13.50	12.70	RUM0E1000-N8C0	B444393/NEI
	100.00	115.00	11.50	10.60	RUM1E1000-N8C0	B452393/1/NEI
	100.00	115.00	12.50	11.50	RUM2E1000-N8C0	B452393/NEI
	100.00	120.00	12.00	11.20	RUM3E1000-N8C0	B472393/1/NEI
	100.00	120.00	14.50	13.40	RUM4E1000-N8C0	B472393/NEI
	105.00	115.00	11.00	10.00	RUM0E1050-N8C0	B452413/NEI
	105.00	125.00	12.50	11.40	RUM3E1050-N8C0	B492413/NEI
	110.00	125.00	12.00	11.20	RUM0E1100-N8C0	B492433/NEI
	110.00	**130.00**	**12.50**	**11.40**	**RUM1E1100-N8C0**	**B511433/NEI**
	110.00	135.00	15.50	14.20	RUM2E1100-N8C0	B531433/NEI
	120.00	132.70	10.00	9.20	RUM1E1200-N8C0	B522472/NEI
	120.00	135.00	12.50	11.60	RUM2E1200-N8C0	B531472/NEI
	120.00	140.00	12.50	11.40	RUM3E1200-N8C0	B551472/NEI
	120.00	145.00	18.80	17.50	RUM4E1200-N8C0	B570472/NEI
	125.00	150.00	14.50	13.10	RUM2E1250-N8C0	B590492/NEI
	130.00	145.00	13.00	12.00	RUM2E1300-N8C0	B570511/1/NEI
	130.00	145.00	15.00	14.00	RUM3E1300-N8C0	B570511/NEI
	130.00	150.00	16.00	14.80	RUM4E1300-N8C0	B590511/NEI
	133.35	158.75	14.00	12.60	RUM0E1333-N8C0	B625525/1/NEI
	135.00	150.00	14.00	13.00	RUM0E1350-N8C0	B590531/1/NEI
	135.00	155.00	16.00	14.80	RUM1E1350-N8C0	B610531/NEI
	135.00	160.00	14.00	12.70	RUM2E1350-N8C0	B629531/NEI
	140.00	155.00	13.00	12.00	RUM0E1400-N8C0	B610551/NEI
	140.00	**160.00**	**12.50**	**11.40**	**RUM1E1400-N8C0**	**B629551/NEI**
	140.00	160.00	14.50	13.40	RUM2E1400-N8C0	B629551/1/NEI
	140.00	170.00	22.80	21.20	RUM3E1400-N8C0	B669551/NEI
	145.00	157.70	10.00	9.20	RUM0E1450-N8C0	B620570/NEI
	150.00	170.00	14.50	13.40	RUM1E1500-N8C0	B669590/1/NEI
	160.00	175.00	16.00	15.50	RUM1E1600-N8C0	B688629/NEI
	160.00	180.00	14.50	13.30	RUM2E1600-N8C0	B708629/NEI
	165.00	184.00	16.00	14.80	RUM0E1650-N8C0	B728649/NEI
	165.00	195.00	20.40	18.70	RUM1E1650-N8C0	B767649/NEI
	175.00	200.00	23.00	21.55	RUM1E1750-N8C0	B787688/1/NEI
	180.00	200.00	14.50	13.30	RUM1E1800-N8C0	B787708/NEI

Dimensions printed in **bold** type correspond to ISO/DIN 5597 and ISO 5597/1. * Split groove
Additional dimensions can be delivered on request.

Note	Rod Diameter	Groove Diameter	Groove Width	Seal Width	TSS Article No.	Description
	d_N h11	D_1 H11	L +0.1	B		
	180.00	210.00	20.50	18.90	RUM2E1800-N8C0	B826708/1/NEI
	190.00	210.00	14.50	13.40	RUM0E1900-N8C0	B826748/NEI
	198.00	208.00	12.00	11.30	RUM0E1980-N8C0	B819779/NEI
	200.00	220.00	14.50	13.30	RUM0E2000-N8C0	B866787/NEI
	210.00	230.00	14.50	13.30	RUM0E2100-N8C0	B905826/NEI
	210.00	240.00	22.50	21.00	RUM1E2100-N8C0	B944826/NEI
	220.00	250.00	20.50	18.90	RUM0E2200-N8C0	B984866/NEI
	230.00	260.00	20.50	19.00	RUM0E2300-N8C0	B1023905/NEI
	500.00	540.00	35.00	32.80	RUM0E5000-N8C0	B21261968/NEI
	530.00	570.00	25.00	23.00	RUM0E5300-N8C0	B22442086/NEI
	640.00	680.00	25.00	23.00	RUM0E6400-N8C0	B26772519/NEI
	702.00	752.40	30.00	27.50	RUM0E7020-N8C0	B29612764/NEI
	760.00	820.00	35.00	32.00	RUM0E7600-N8C0	B32282992/NEI
	785.00	845.00	35.00	32.00	RUM0E7850-N8C0	B33273090/NEI
	845.00	905.00	35.00	32.00	RUM0E8450-N8C0	B35633327/NEI
	921.00	981.00	35.00	32.00	RUM0E9210-N8C0	B38623626/NEI
	1040.00	1110.00	35.00	32.00	RUM0X1040-N8C0	B43704094/NEI
	1195.00	1265.00	35.00	32.00	RUM0X1195-N8C0	B49804705/NEI

Dimensions printed in **bold** type correspond to ISO/DIN 5597 and ISO 5597/1. * Split groove
Additional dimensions can be delivered on request.

Zurcon® L-Cup®

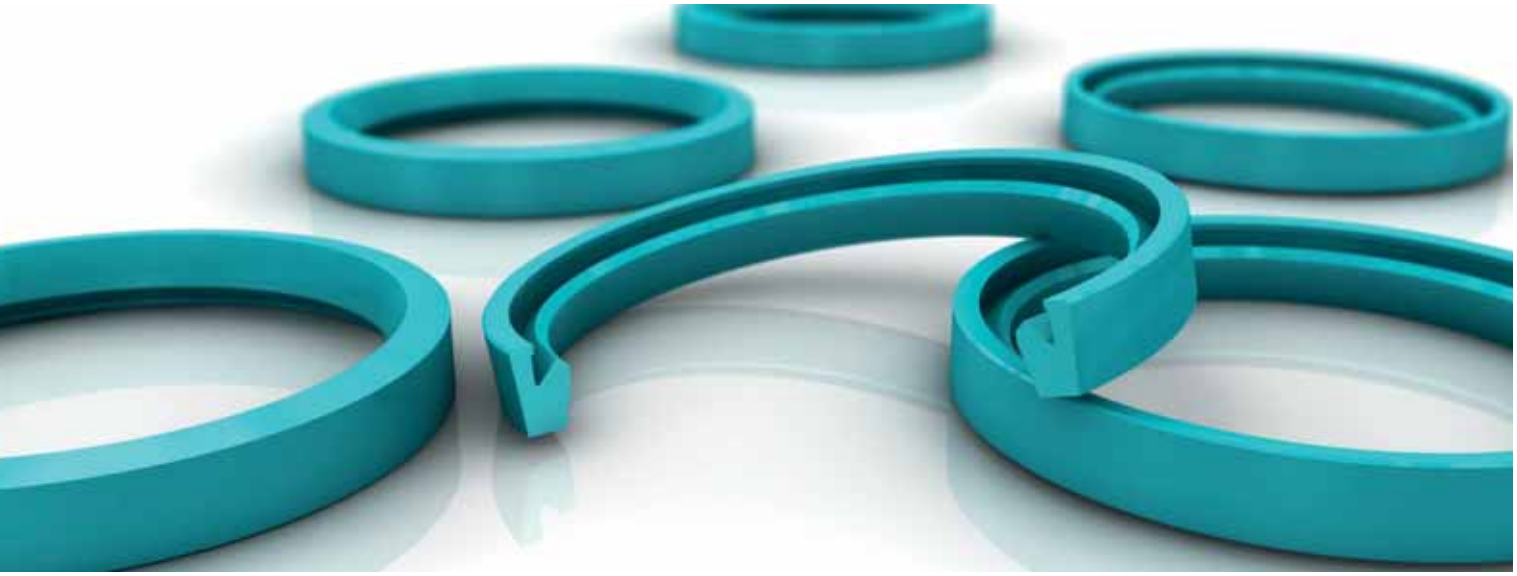

Single Acting

Low Friction Properties

Material:
Zurcon®

■ Zurcon® L-Cup®

Introduction

The rod sealing system is the most critical part of a hydraulic cylinder. Therefore it is expected that a rod sealing system performs under leak-free conditions in the static and dynamic state. Moreover it has to fulfil the lifetime of several thousand hours.

To meet these requirements, Trelleborg Sealing Solutions has developed the Zurcon® L-Cup®*, a highly effective and innovative rod sealing component.

***Patent for: Europe No. EP 0724693**
***Patent for: US No. 5,649,711**
***Patent for: China No. ZL 94193869.7**
Zurcon® L-Cup® is a trade name.

Description

Zurcon® L-Cup® is a single acting polyurethane rod seal with a unique design offering a hydrodynamic backpumping ability over the complete working pressure range. The pressure-independent, hydrodynamic sealing ability of this new sealing element requires no lubrication reservoir in the sealing area and ensures a constant and controlled pressure distribution over a wide pressure range.

The advantages of the Zurcon® L-Cup® design lead to the following improved properties:

Advantages

- Hydrodynamic back-pumping ability over the complete working pressure range
- Low friction and therefore a reduction of heat generated
- Low breakout force even after a long period of non-operation
- Very low stick-slip
- Low increase in friction at increasing pressure
- High extrusion resistance
- Optimum geometry of the static sealing lip for higher sealing ability
- No entrapped oil and grease between seal and groove (due to notches)
- No pressure build-up between seal and groove OD
- Long service life

The Zurcon® L-Cup® was designed in accordance with customers' demands.

- Groove dimensions according to ISO 5597 Part 2
- Interchangeable with existing U-Cup grooves
- Installation into closed grooves
- Wear and extrusion resistant high-performance polyurethane

Application Examples

Zurcon® L-Cup® can be used in all applications in which previously a conventional U-Cup was applied, such as:

- Fork lifts
- Agricultural machines
- Light and medium mobile hydraulics
- Industrial hydraulics
- Machine tools
- Injection moulding machines
- hydraulic presses.

Another preferred solution for tandem rod sealing systems is the combination with the Turcon® Stepseal® 2K as primary seal and L-Cup® as secondary seal, in conjunction with a double acting scraper.

Technical Data

Operating conditions

Pressure:	Up to 40 MPa
Velocity:	Up to 0.5 m/s
Temperature:	-35 °C to +110 °C
Media:	Hydraulic fluids based on mineral oil

Important Note:
The above data are maximum values and cannot be used at the same time. e.g. the maximum operating speed depends on material type, pressure, temperature and gap value.
Temperature range also dependent on medium.

Materials

Zurcon® Z20

Special polyurethane	93 Shore A
Colour:	turquoise

Method of Operation

Trelleborg Sealing Solutions' experience in the production of hydrodynamic back-pumping seals such as Turcon® Stepseal® 2K, and the use of Finite Element Analysis (FEA) and other laboratory tests have led to the development of Zurcon® L-Cup®. The main objective in the development of this seal was the ability to achieve an optimum pressure distribution over the complete pressure range.

The pressure distribution curve under the sealing lip needs to have a steep gradient on the high-pressure side and a shallow gradient on the rear of the seal.

The operating principles and function of Zurcon® L-Cup® is similar to the well-known Turcon® Stepseal® 2K.

Friction

In Figure 38 the friction values of a conventional U-Cup and of Zurcon® L-Cup® are being compared. A high increase in friction of the U-Cup is clearly shown between approximately 5 and 15 MPa. This is due to the U-Cup being totally pressed on the rod surface at increased pressure, causing elimination of the oil reservoir and dry running of the U-Cup.

In comparison, the L-Cup® shows only a low increase in friction which is due to the smaller contact area and better tribological behaviour. The result is a low friction heat generation.

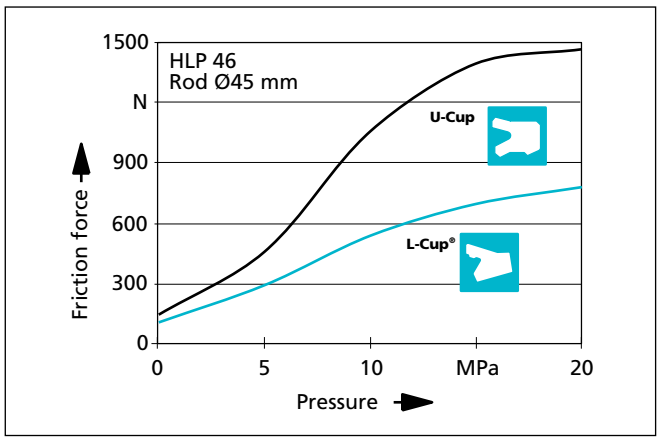

Figure 38 Friction dependent on pressure

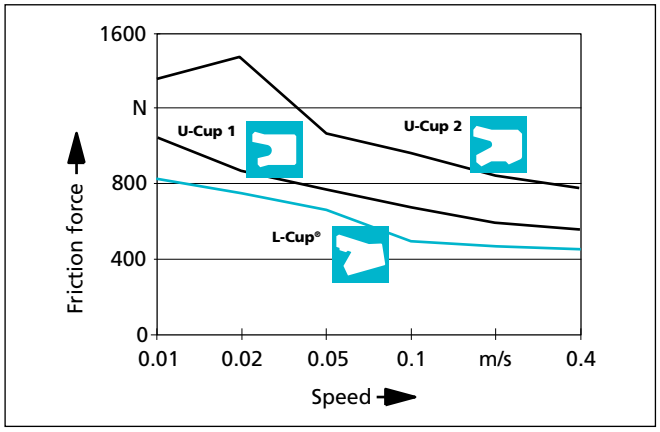

Figure 39 Friction dependent on speed

Friction Heat

The effect described above can be made visible by simply measuring the temperature. Figure 40 shows the increase in temperature on the rod surface caused by friction, measured at a pressure of 40 MPa after 20 000 cycles. This explains the prolonged service life of L-Cup®.

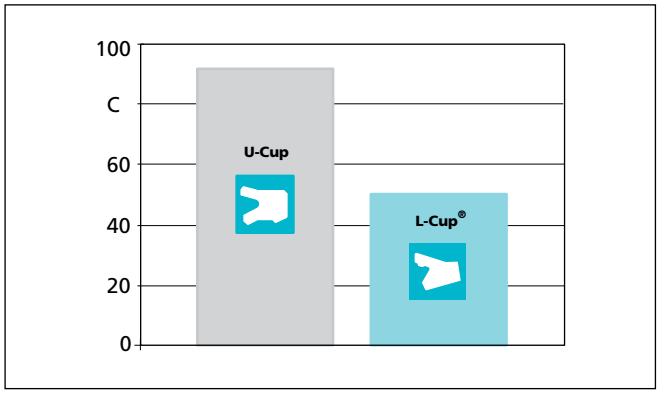

Figure 40 Increase in temperature caused by friction

Test Conditions (Figure 40)

Dimension:	50 x 60 x 11 mm
Pressure:	0/40 MPa
Velocity:	0.1 m/s
Temperature:	ambient

Sealing Gap

The recommended gap dimensions described in Figure 41, depend on pressure and temperature.

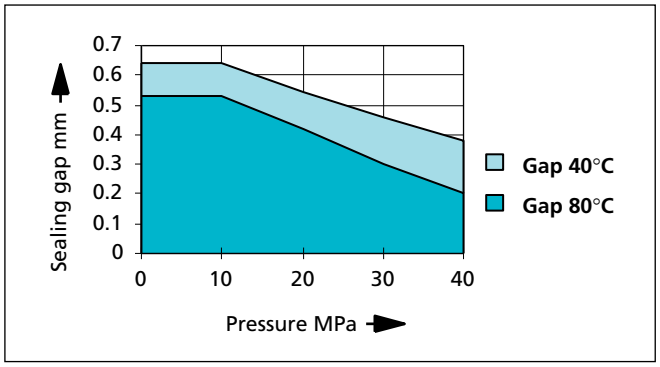

Figure 41 Sealing gap

Design Instructions

Lead-in chamfers

In order to avoid damage to the rod seal during installation, lead-in chamfers and rounded edges must be provided on the piston rods (Figure 42). If this is not possible for design reasons, a separate installation tool must be used.

The minimum length of the lead-in chamfer depends on the profile size of the seal and can be seen from the following tables.

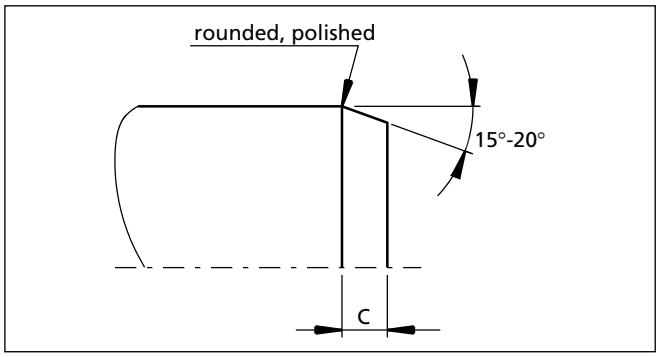

Figure 42 Lead-in chamfer

Lead-in Chamfer Length C min.	Zurcon® L-Cup® Groove Depth*
2.0	3.5
2.0	4.0
2.5	5.0
4.0	7.5
5.0	10.0
6.5	12.5
7.5	15.0

* The groove depth is calculated from: $(D - d_N)/2$.
The dimensions for D and d_N can be found in the Table XXXI.

■ Installation Recommendation

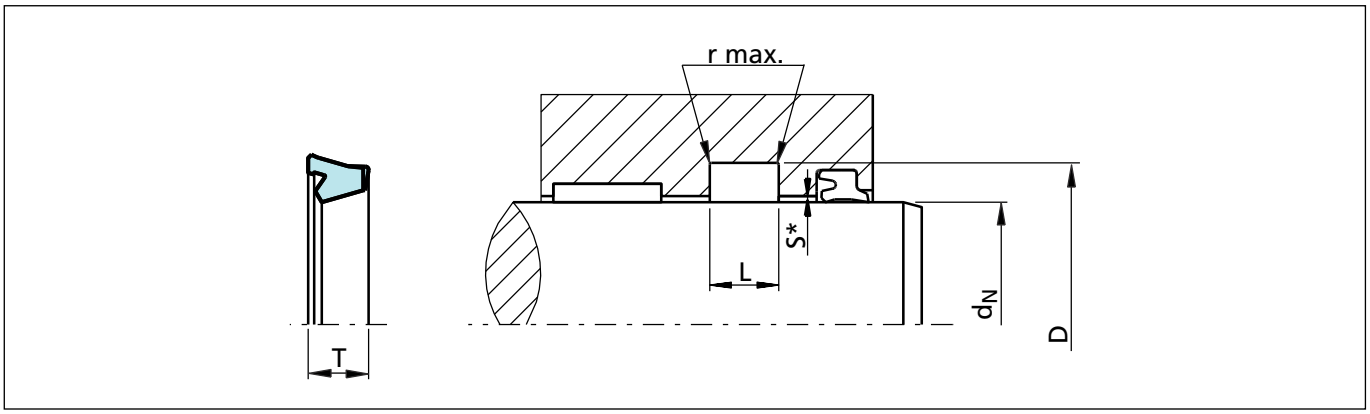

Figure 43 Installation drawing
* Gap measure "S" see Figure 41

Table XXXI Installation dimensions / TSS Article No.

Rod Dia.	Groove Dia.	Groove Width	Ra-dius	Ring Width	TSS Article No.
d_N f8	D H10	L +0.25	r max	T	
***10**	**18**	**6.3**	**0.3**	**5.7**	**RLS100100-Z20**
***12**	**20**	**6.3**	**0.3**	**5.7**	**RLS100120-Z20**
***14**	**22**	**6.3**	**0.3**	**5.7**	**RLS100140-Z20**
16	22	**6.0**	**0.3**	**5.4**	RL38N0160-Z20
***18**	**26**	**6.3**	**0.3**	**5.7**	**RLS100180**-Z20
20	26	5.5	0.3	5.0	RL04N0200-Z20
***20**	**28**	**6.3**	**0.3**	**5.7**	**RL08N0200-Z20**
***22**	**30**	**6.3**	**0.3**	**5.7**	**RL08N0220-Z20**
25	**33**	**8.0**	**0.3**	**7.2**	**RL10N0250-Z20**
25	**33**	**6.3**	**0.3**	**5.7**	**RL08N0250-Z20**
28	**36**	**6.3**	**0.5**	**5.7**	**RL08N0280-Z20**
***28**	**38**	**8.0**	**0.3**	**7.2**	**RL14N0280-Z20**
30	38	6.3	0.3	5.7	RL08N0300-Z20
30	40	8.0	0.3	7.2	RL14N0300-Z20
30	38	8.0	0.3	7.2	RL10N0300-Z20
30	40	11.0	0.3	9.9	RL17N0300-Z20
32	**42**	**8.0**	**0.3**	**7.2**	**RL14N0320-Z20**
35	43	6.3	0.3	5.7	RL08N0350-Z20
35	45	11.0	0.3	9.9	RL17N0350-Z20
36	**44**	**6.3**	**0.5**	**5.7**	**RL08N0360-Z20**
36	**46**	**8.0**	**0.3**	**7.2**	**RL14N0360-Z20**

* Split groove
Dimensions and TSS Article Numbers in bold according to ISO 5597, Edition 2 tables 4 and 5.

Rod Dia.	Groove Dia.	Groove Width	Ra-dius	Ring Width	TSS Article No.
d_N f8	D H10	L +0.25	r max	T	
36	46	10.0	0.3	9.0	RL16N0360-Z20
38	48	11.0	0.3	9.9	RL17N0380-Z20
40	48	7.0	0.3	6.3	RL09N0400-Z20
40	**50**	**8.0**	**0.3**	**7.2**	**RL14N0400-Z20**
40	50	10.0	0.3	9.0	RL16N0400-Z20
42	52	8.0	0.3	7.2	RL14N0420-Z20
42	52	10.0	0.3	9.0	RL16N0420-Z20
45	53	8.0	0.3	7.2	RL10N0450-Z20
45	**55**	**8.0**	**0.3**	**7.2**	**RL14N0450-Z20**
48	60	11.0	0.3	9.9	RL36N0480-Z20
50	58	9.0	0.3	8.1	RL11N0500-Z20
50	**60**	**8.0**	**0.3**	**7.2**	**RL14N0500-Z20**
50	60	10.0	0.3	9.0	RL16N0500-Z20
50	**65**	**12.5**	**0.4**	**11.3**	**RL26N0500-Z20**
55	63	9.0	0.3	8.1	RL11N0550-Z20
55	65	10.0	0.3	9.0	RL16N0550-Z20
***56**	**71**	**12.5**	**0.4**	**11.3**	**RL26N0560-Z20**
60	68	9.0	0.3	8.1	RL11N0600-Z20
60	70	8.0	0.3	7.2	RL14N0600-Z20
60	70	10.0	0.3	9.0	RL16N0600-Z20
63	**78**	**12.5**	**0.4**	**11.3**	**RL26N0630-Z20**
65	75	10.0	0.3	9.0	RL16N0650-Z20
70	80	10.0	0.3	9.0	RL16N0700-Z20
70	**85**	**12.5**	**0.4**	**11.3**	**RL26N0700-Z20**
75	90	12.5	0.3	11.3	RL26N0750-Z20
80	**95**	**12.5**	**0.4**	**11.3**	**RL26N0800-Z20**
85	100	13.1	0.4	11.8	RL27N0850-Z20
90	**105**	**12.5**	**0.4**	**11.3**	**RL26N0900-Z20**
100	**120**	**16.0**	**0.6**	**14.4**	**RL30N1000-Z20**
110	**130**	**16.0**	**0.6**	**14.4**	**RL30N1100-Z20**
115	135	16.0	0.6	14.4	RL30N1150-Z20
119	134	9.4	0.4	8.1	RL22N1190-Z20
120	135	12.5	0.4	11.3	RL26N1200-Z20
120	140	16.0	0.6	14.4	RL30N1200-Z20
125	140	12.0	0.4	10.8	RL25N1250-Z20
125	**145**	**16.0**	**0.6**	**14.4**	**RL30N1250-Z20**

* Split groove
Dimensions and TSS Article Numbers in bold according to ISO 5597, Edition 2 tables 4 and 5.

Rod Dia.	Groove Dia.	Groove Width	Ra-dius	Ring Width	TSS Article No.
d_N f8	D H10	L +0.25	r max	T	
130	150	16.0	0.6	14.4	RL30N1300-Z20
135	155	16.0	0.6	14.4	RL30N1350-Z20
140	**160**	**16.0**	**0.6**	**14.4**	**RL30N1400-Z20**
150	170	16.0	0.6	14.4	RL30N1500-Z20
155	175	16.0	0.6	14.4	RL30N1550-Z20
160	180	16.0	0.6	14.4	RL30N1600-Z20
195	220	20.0	0.6	18.0	RL32N1950-Z20

* Split groove
Dimensions and TSS Article Numbers in bold according to ISO 5597, Edition 2 tables 4 and 5.

Zurcon® U-Cup RU2

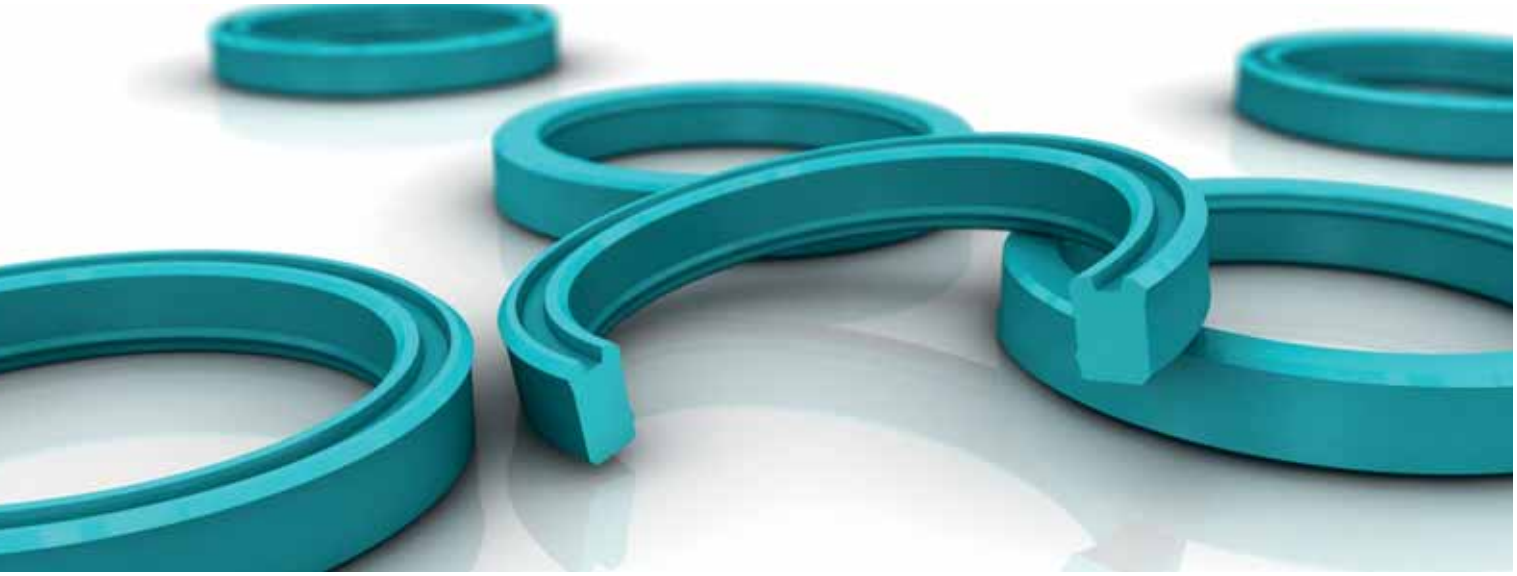

Single Acting U-Cup

Asymmetric, Double Lip, Compact

Material:
Zurcon®

■ U-Cup RU2

Description

Today U-Cups are used primarily as seals for piston rods in hydraulic cylinders. U-Cups in polyurethane are proven elements, due to their good mechanical properties, for standard cylinder construction, particularly for mobile hydraulics under rough operating conditions.

The U-Cup RU2 is a double lip seal in a compact design.

Type RU2

The compact U-Cup type RU2 is designed for small grooves. It is thus particularly suitable for use in space-saving designs. The compact form provides a high sealing effect even with low system pressures.

The U-Cup has two sealing lips in the dynamic sealing zone. The compact form with two sealing lips provides an improvement in the leakage behaviour at low system pressures. Due to the incorporation of an oil trap between the two sealing lips, friction at pressures above approx. 10 MPa is reduced. Furthermore, the second sealing lip prevents the entry of dirt from the atmosphere side.

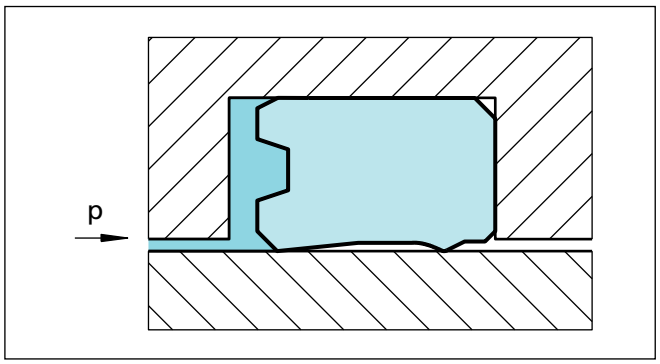

Figure 44 U-Cup, type RU2

Method of Operation

The sealing effect of the U-Cup comes from the intrinsic preload of the seal body and from the compression of the seal lips during installation. In operating condition, the radial mechanical contact forces are superimposed by the system pressure.

At low stroke speeds, U-Cups can tend to have a stick-slip effect due to an inadequate lubrication film formation in the seal clearance and to their material properties. This behaviour corresponds to the Stribeck curve described in the relevant literature.

Advantages

- Good sealing effect at high and low pressures
- Good abrasion resistance, wear-resistant
- Unaffected by sudden loads
- Suitable for small grooves
- Simple installation.

Technical Data

Operating pressure:	Max. 40 MPa
Speed:	Up to 0.5 m/s
Temperature:	Use in mineral oils: -35 °C to + 110 °C
Media:	Mineral oil-based hydraulic fluids.

Important Note:
The above data are maximum values and cannot be used at the same time. e.g. the maximum operating speed depends on material type, pressure, temperature and gap value.
Temperature range also dependent on medium.

Material

Standard Zurcon®:	Z20
Special Polyurethane:	93 Shore A
Colour:	turquoise

Seal clearance

Guide values for the radial clearance between rod and gland in relation to the operating pressure and rod diameter can be found in the table below.

Operating max. Pressure MPa	Radial Clearance S max.	
	d_N <60 mm	d_N >60mm
5	0.40	0.50
10	0.30	0.40
20	0.20	0.30
30	0.15	0.20
40	0.10	0.15

The values for S max. given in this table apply to all types for the low-pressure side of the U-Cup. They are designed for an operating temperature of 60 °C.

■ Installation Recommendation

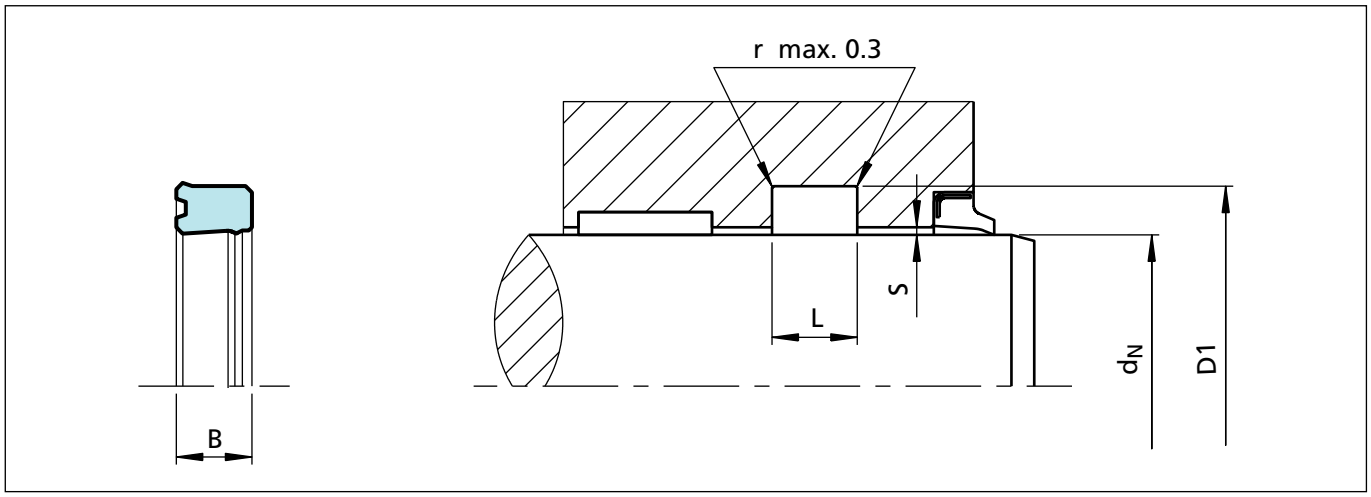

Figure 45 Installation drawing
Dimensions "S" (see table on previous page)

Ordering example

U-Cup Type RU2

Rod diameter:	d_N = 45.0 mm
Groove diameter:	D1 = 55.0 mm
Groove width:	L = 11.0 mm
TSS Part No.:	RU2200450 -

Material

Standard Zurcon®:	Z20
Special polyurethane:	93 Shore A
Colour:	turquoise

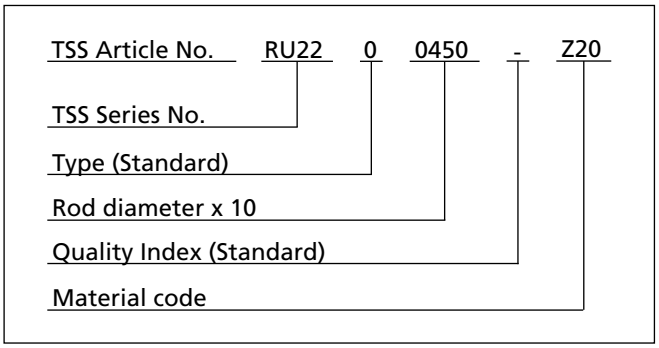

Table XXXII Installation dimensions / TSS Part No.

Note	Rod Diameter	Groove Diameter	Groove Width	Seal Width	TSS Part No.
	d_N f8/h9	**D_1** H10	**L** +0.2	**B**	
*	**6.0**	**14.0**	**6.3**	**5.8**	**RU2000060**
*	**8.0**	**16.0**	**6.3**	**5.8**	**RU2200080**
*	**10.0**	**18.0**	**6.3**	**5.8**	**RU2000100**
*	**12.0**	**20.0**	**6.3**	**5.8**	**RU2100120**
*	**14.0**	**22.0**	**6.3**	**5.8**	**RU2100140**
*	**16.0**	**24.0**	**6.3**	**5.8**	**RU2000160**
*	**18.0**	**26.0**	**6.3**	**5.8**	**RU2100180**
	20.0	**28.0**	**6.3**	**5.8**	**RU2100200**
*	**20.0**	**30.0**	**8.0**	**7.0**	**RU2300200**

Dimensions printed in **bold** type correspond to ISO/DIN 5597 and ISO 5597/1. * Split groove
Additional dimensions can be delivered on request.

Zurcon® U-Cup RU2

Note	Rod Diameter	Groove Diameter	Groove Width	Seal Width	TSS Part No.
	d_N f8/h9	D_1 H10	L +0.2	B	
	22.0	**30.0**	**6.3**	**5.8**	**RU2300220**
	24.0	32.0	6.3	5.7	RU2000240
	25.0	**33.0**	**6.3**	**5.7**	**RU2000250**
*	**25.0**	**35.0**	**8.0**	**7.0**	**RU2400250**
*	25.0	35.0	9.0	8.0	RU2500250
	28.0	36.0	6.3	5.8	RU2000280
*	**28.0**	**38.0**	**6.3**	**5.8**	**RU2300280**
*	**28.0**	**38.0**	**8.0**	**7.0**	**RU2400280**
	32.0	**42.0**	**8.0**	**7.0**	**RU2100320**
	36.0	44.0	6.3	5.8	RU2000360
	36.0	**46.0**	**8.0**	**7.3**	**RU2300360**
	40.0	**50.0**	**8.0**	**7.0**	**RU2500400**
	45.0	53.0	6.3	5.8	RU2000450
	45.0	**55.0**	**6.3**	**5.7**	**RU2300450**
	45.0	**55.0**	**8.0**	**7.0**	**RU2500450**
	50.0	**60.0**	**8.0**	**7.0**	**RU2400500**
	56.0	66.0	7.5	6.5	RU2100560
	56.0	**71.0**	**12.5**	**11.5**	**RU2200560**
	63.0	**78.0**	**12.5**	**11.5**	**RU2100630**
	70.0	80.0	7.5	6.5	RU2200700
	80.0	**95.0**	**12.5**	**11.5**	**RU2100800**
	90.0	100.0	7.5	6.5	RU2000900
	90.0	**105.0**	**12.5**	**11.4**	**RU2400900**
	110.0	125.0	10.5	9.5	RU2001100
	110.0	**130.0**	**16.0**	**15.0**	**RU2101100**
	140.0	**160.0**	**16.0**	**15.0**	**RU2201400**

Dimensions printed in **bold** type correspond to ISO/DIN 5597 and ISO 5597/1. * Split groove
Additional dimensions can be delivered on request.

Zurcon® U-Cup RU6

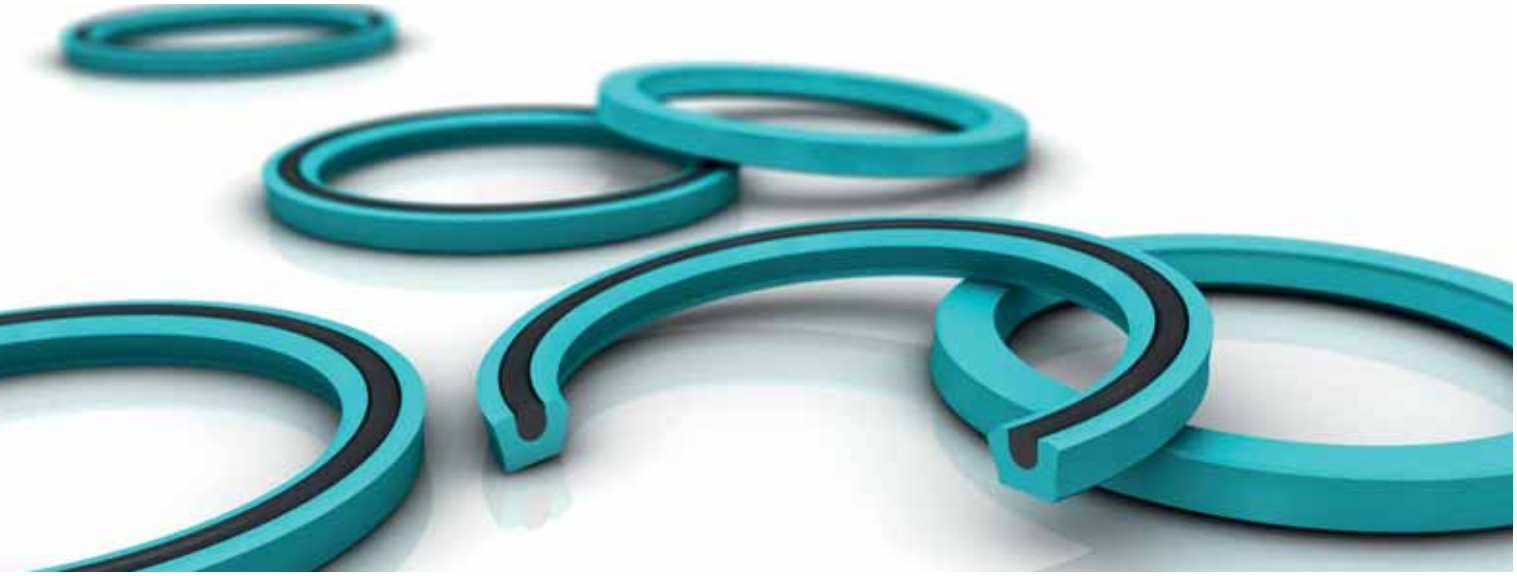

Single Acting U-Cup

Rubber Energized

Material:
Zurcon® + NBR

■ U-Cup RU6

Description

Additional to the machined seals Stepseal® 2K and Rimseal for housings due to ISO 7425/2 (rubber energised plastic seals) the U-Cup type RU6 has been developped as an injection molded seal of polyurethane material to fit in the same ISO housings. The integrated NBR O-Ring (only available for series RU62 - RU64) improves the performance at low pressure and low temperature applications. Polyurethan (Zurcon® Z20) is a proved material for U-cups due to their good mechanical properties.

Type RU6

The U-Cup type RU6 can be installed as a single seal for low to medium duty applications; for sealing systems, the U-Cup RU6 shall be installed mainly as a secondary seal together with the Turcon® Stepseal® 2K as primary seals.

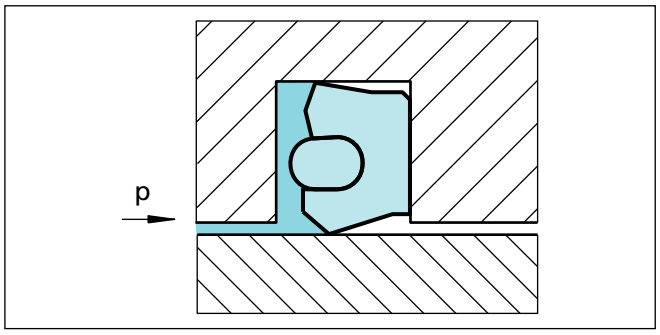

Figure 46 U-Cup, type RU6

Method of Operation

The sealing effect of the U-Cup RU6 comes from the intrinsive preload of the seal body and from the compression of the seal lip and the O-Ring during installation. In operation conditions, the radial contact forces are superimposed by the system pressure.

Due to the special design and the integrated O-Ring the RU6 U-Cups have an excellent sealing behavior with and without pressure activation. The short sealing lip gives better friction values compared to common U-Cups.

Advantages

- Very good low pressure sealability
- Simple installation
- Lower friction compared with common U-Cups
- Installation in ISO 7475/2 grooves
- Very low compression set due to O-Ring

Application Examples

- General hydraulic cylinders
- Injection molding machines
- Lift trucks
- Agricultural machines

Technical Data

Operating pressure:	Max. 25 MPa (as single element)
Speed:	Up to 0.5 m/s
Temperature:	Use in mineral oils: -35 °C to + 110 °C
Media:	Mineral oil-based hydraulic fluids.

Important Note:
The above data are maximum values and cannot be used at the same time. e.g. the maximum operating speed depends on material type, pressure, temperature and gap value.
Temperature range also dependent on medium.

Clearance

Operating Pressure MPa max.	Radial Clearance S max.
16	0.60
25	0.50

The values for S max given in this table apply to all types for the low-pressure side of the U-Cup. They are designed for an operating temperature of 60 °C. (for harsh conditions and high side loads the gap must be reduced by 50%)

Material

The thermoplastic polyurethane material Zurcon® Z20 has a high abrasion resistance, a low compression set and exhibits a high resistance to clearance extrusion.

The integrated O-Ring is an NBR with 70 shore A and a very low compression set.

U-Cup:	polyurethane 93 shore A material code Z20
O-Ring:	NBR 70 Shore A material code N
Set code:	Z20N

Design and Installation Instructions

The different forms have different grooves, see Table XXXIII.

Surface roughness

Parameter	Mating Surface µm	Groove Surface µm
R_{max}	1.00 - 4.00	< 16.0
$R_{z\ DIN}$	0.63 - 2.50	< 10.0
R_a	0.10 - 0.40	< 1.6

The material contact area R_{mr} should be approx. 50 to 70%, determined at a cut depth c = 0.25 x R_z, relative to a reference line of $C_{ref.}$ 5%.

■ Installation Recommendation

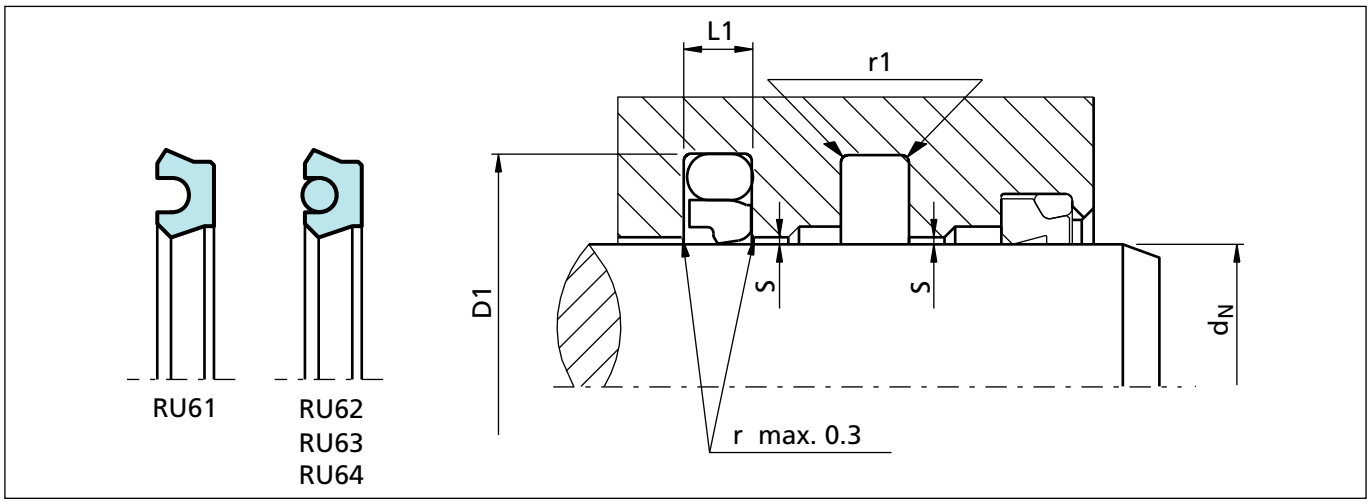

Figure 47 Installation drawing

Ordering example

U-Cup Type RU6
Rod diameter: d_N = 25.0 mm
Groove diameter: D1 = 36.0 mm
Groove width: L = 4.2 mm
TSS Part No.: RU6200250 -

Compound code seal: Z20 turquoise
Compound code O-Ring: N
Material set code: Z20N

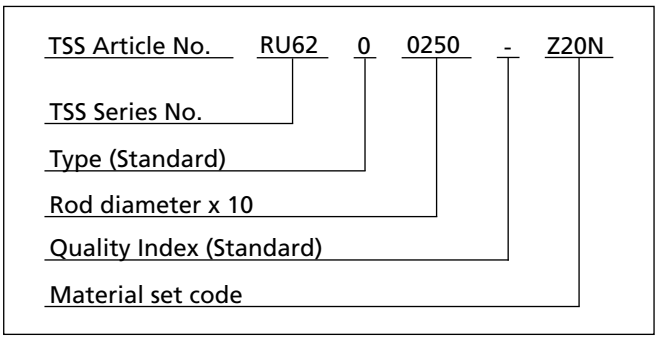

Table XXXIII Installation dimensions / TSS Part No.

Open groove	Rod Diameter	Groove Diameter	Groove Width	Radius	TSS Part No.	O-Ring Size
	d_N f8/h9	D_1 H10	L +0.2	r1		
	12.0	**19.5**	**3.2**	**0.5**	**RU6100120**	-
	14.0	**21.5**	**3.2**	**0.5**	**RU6100140**	-
	16.0	**23.5**	**3.2**	**0.5**	**RU6100160**	-
	18.0	**25.5**	**3.2**	**0.5**	**RU6100180**	-
	20.0	**27.5**	**3.2**	**0.5**	**RU6100200**	-
	22.0	**29.5**	**3.2**	**0.5**	**RU6100220**	-
	25.0	**32.5**	**3.2**	**0.5**	**RU6100250**	-
x	**28.0**	**39.0**	**4.2**	**0.5**	**RU6200280**	**31.42 x 2.62**
x	**32.0**	**43.0**	**4.2**	**0.5**	**RU6200320**	**36.17 x 2.62**

Dimensions printed in **bold** type correspond to ISO/DIN 7425/2. Is also suitable for TSS Stepseal® groove.

Zurcon® U-Cup RU6

Open groove	Rod Diameter	Groove Diameter	Groove Width	Radius	TSS Part No.	O-Ring Size
	d_N f8/h9	D_1 H10	L +0.2	r1		
	36.0	**47.0**	**4.2**	**0.5**	**RU6200360**	**39.34 x 2.62**
x	**40.0**	**51.0**	**4.2**	**0.5**	**RU6200400**	**44.12 x 2.62**
x	**45.0**	**56.0**	**4.2**	**0.5**	**RU6200450**	**48.90 x 2.62**
	50.0	**61.0**	**4.2**	**0.5**	**RU6200500**	**53.64 x 2.62**
	55.0	66.0	4.2	0.5	RU6200550	58.42 x 2.62
	56.0	**67.0**	**4.2**	**0.5**	**RU6200560**	**59.99 x 2.62**
	56.0	**71.5**	**6.3**	**0.9**	**RU6300560**	**59.92 x 3.53**
	63.0	**74.0**	**4.2**	**0.5**	**RU6200630**	**66.34 x 2.62**
	63.0	**78.5**	**6.3**	**0.9**	**RU6300630**	**66.27 x 3.53**
	65.0	80.5	6.3	0.9	RU6300650	69.44 x 3.53
	70.0	**85.5**	**6.3**	**0.9**	**RU6300700**	**75.79 x 3.53**
	75.0	90.5	6.3	0.9	RU6300750	82.14 x 3.53
	80.0	**95.5**	**6.3**	**0.9**	**RU6300800**	**85.32 x 3.53**
	90.0	**105.5**	**6.3**	**0.9**	**RU6300900**	**94.84 x 3.53**
	100.0	**115.5**	**6.3**	**0.9**	**RU6301000**	**104.37 x 3.53**
	110.0	**125.5**	**6.3**	**0.9**	**RU6301100**	**113.89 x 3.53**
	120.0	135.5	6.3	0.9	RU6301200	126.59 x 3.53
	130.0	145.5	6.3	0.9	RU6301300	136.12 x 3.53
	140.0	**155.5**	**6.3**	**0.9**	**RU6301400**	**145.64 x 3.53**
	150.0	165.5	6.3	0.9	RU6301500	158.34 x 3.53
	160.0	**175.5**	**6.3**	**0.9**	**RU6301600**	**164.69 x 3.53**
	180.0	**195.5**	**6.3**	**0.9**	**RU6301800**	**183.74 x 3.53**
	190.0	205.5	6.3	0.9	RU6301900	196.44 x 3.53
	200.0	**221.0**	**8.1**	**0.9**	**RU6402000**	**208.92 x 5.33**
	210.0	231.0	8.1	0.9	RU6402100	221.62 x 5.33
	260.0	281.0	8.1	0.9	RU6402600	266.07 x 5.33
	300.0	321.0	8.1	0.9	RU6403000	329.57 x 5.33
	350.0	371.0	8.1	0.9	RU6403500	354.97 x 5.33

Dimensions printed in **bold** type correspond to ISO/DIN 7425/2. Is also suitable for TSS Stepseal® groove.

Zurcon® U-Cup RU9

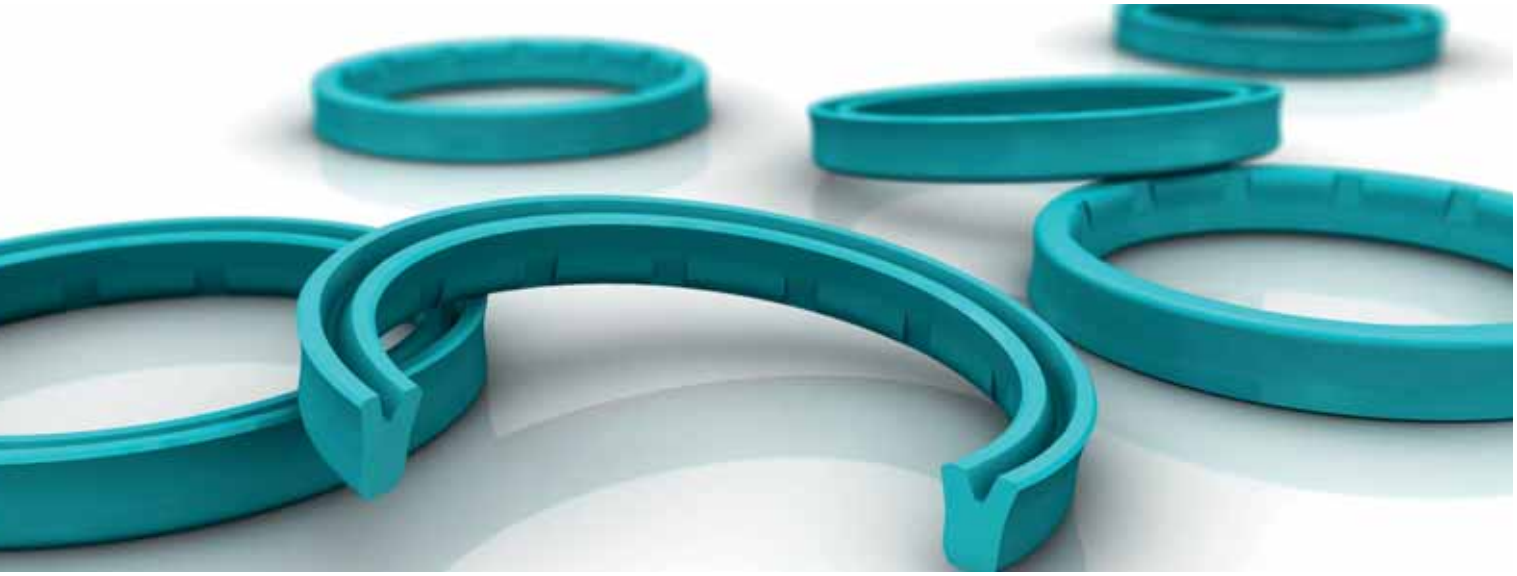

Single Acting U-Cup

New U-Cup Design

Material:
Zurcon®

■ Zurcon® U-Cup RU9

Introduction

Rod seals are particularly exposed to pressure and friction. A long service life is a specific requirement of piston rods. Features such as wear and extrusion resistance, media and temperature compatibility, low friction, compact installation dimensions and ease of assembly are also essential and require the introduction of new products and materials. It is against this background that we have developed the Zurcon® U-Cup RU9.

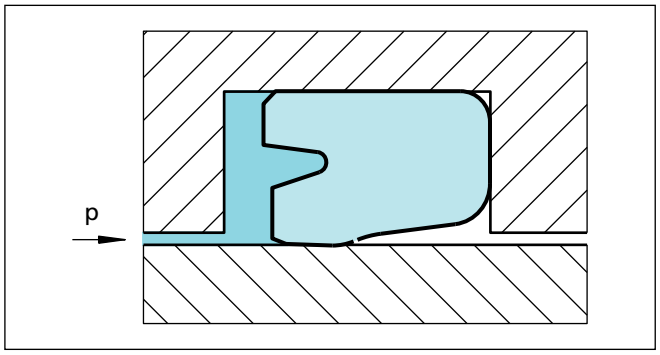

Figure 48 U-Cup, type RU9

Description

Due to its special design, behind the dynamic seal lip, the Zurcon® U-Cup RU9 with its structure of slide segments interspersed by back-pumping channels features excellent back-pumping ability across the entire pressure range. The dynamic seal slide segments also have a micro-structure with excellent tribological and sealing characteristics. As well as increasing the sealing ability of the U-Cup RU9, this also ensures a constant lubrication film underneath the seal sliding surface, reducing breakaway force even after prolonged periods of rest and reduces dynamic friction force.

■ Characteristics

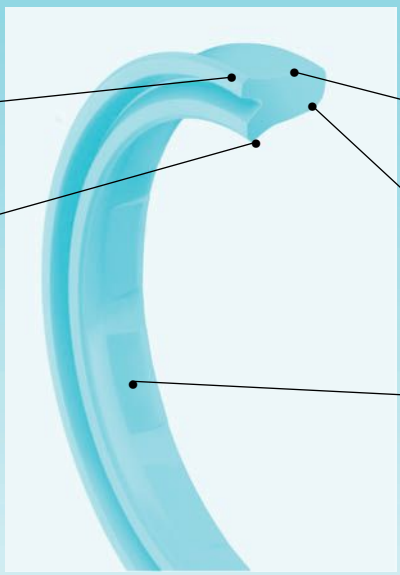

Trimmed sealing lip
High interference
Excellent static tightness

Trimmed sealing lip
High dynamic and static tightness

Expansion free space to reduce friction at the dynamic surface

Expansion free space for increased extrusion resistance

Slide segment for increased backpumping ability
Reduced friction
Low heat generation

Friction

The friction force of U-Cups dramatically increases between 2.5 and 10 MPa. The Zurcon® U-Cup RU9 has a unique feature. As the system pressure increases, the contact surface between the U-Cup and the piston rod increases. Once a specific system pressure is reached, the seal deforms to such an extent that its entire friction-generating inside surface gets in contact with the piston rod. Due to the special design of Zurcon® U-Cup RU9 there is improved pressure distribution on the rod. The resulting tribological benefits restrict the increase in friction. When we compare the friction values of conventional U-Cups with those of the Zurcon® U-Cup RU9 the results are self-evident.

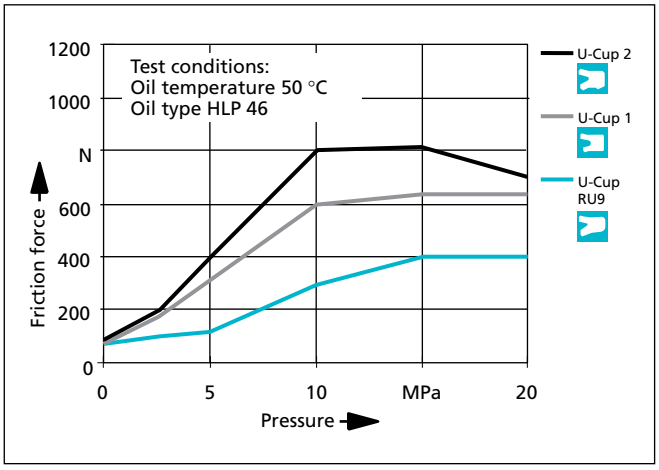

Figure 49 Friction dependent on pressure

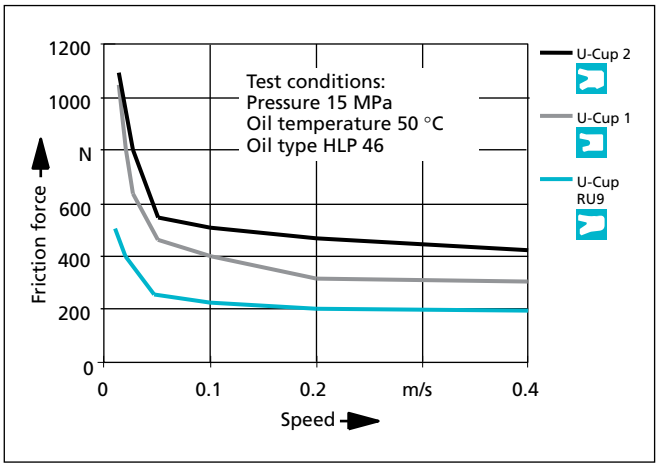

Figure 50 Friction dependent on speed

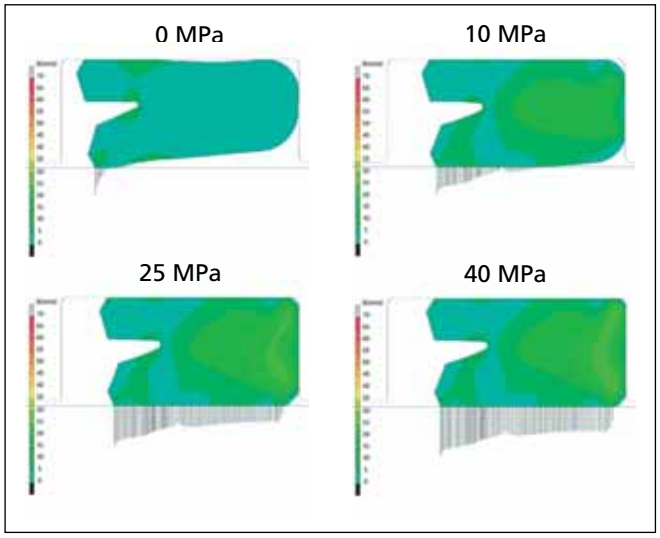

Figure 51 How the Zurcon® U-Cup RU9 performs underpressure

Sealing Performance

The high sealing performance is achieved by:

- Interference fit at the external diameter
- Special shape of both trimmed seal lips
- Controlled pressure distribution and hydrodynamic backpumping ability over a wide pressure range

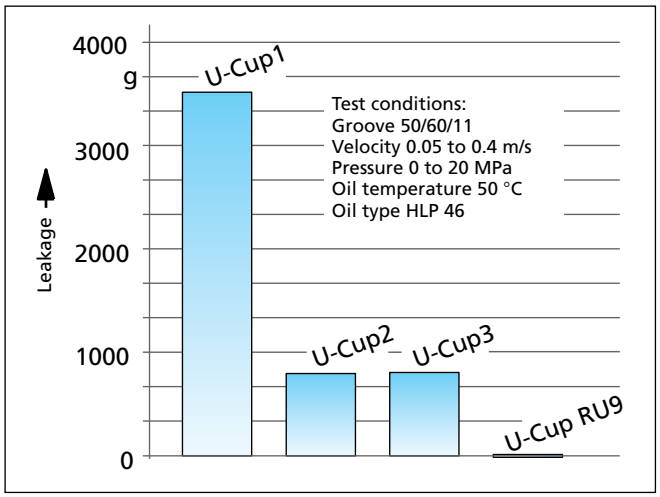

Figure 52 Leakage performance dependent on U-Cup type

Radial clearance

The new Zurcon® RU9 design combined with the special compound properties shows a better extrusion resistance compared to standard U-Cup under all working conditions. The hardware clearance can be increased significantly.

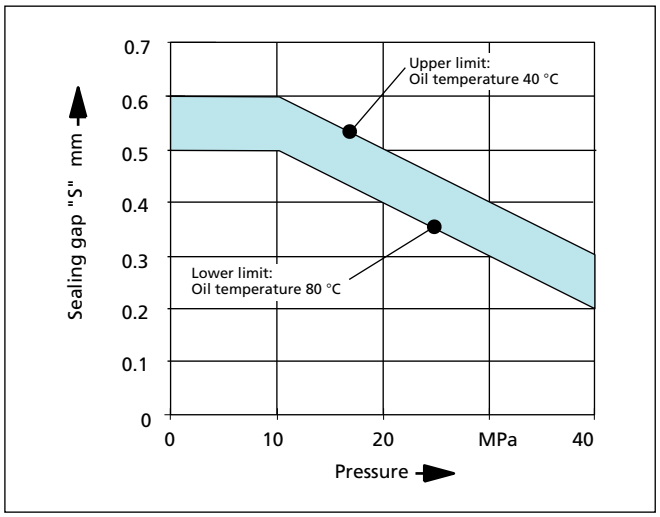

Figure 53 Radial clearance "S" as function of pressure

Advantages

- Lower friction than standard U-Cups
- Lower heat generation than standard U-Cups
- High extrusion resistance
- Excellent dynamic and static sealing
- Optimum environment protection
- Back pumping ability over the entire pressure range achieved by grooved profile
- Suitable with the Zurcon® Buffer Seal as secondary seal in "tandem design"
- Suitable for sealing systems with double scraper
- Seal stability within the groove

Application Examples

Zurcon® U-Cup RU9 can be used in all applications in whichpreviously a conventional U-Cup was applied, such as:

- Hydraulic cylinders
- Construction machinery
- Fork lifts
- Truck cranes
- Telescopic cylinders
- Agricultural machines
- Machine tools
- Injection moulding machines
- Hydraulic presses
- Gas spring

In medium/heavy duty applications the preferred solution for tandem rod sealing systems is the combination with the Zurcon® Buffer Seal primary seal and Zurcon® U-Cup RU9 in conjunction with a double acting scraper.

Materials

Zurcon® Z20 Standard polyurethane 93 Shore A
Zurcon® Z22 Premium polyurethane 93 Shore A

Colour: Turquoise

The Zurcon® polyurethane has high abrasion resistance, a low compression set, high extrusion resistance and a wide temperature range.

Technical Data

Operating conditions:

Pressure:	Up to 40 MPa
Velocity:	Up to 0.5 m/s
Temperature:	
Zurcon® Z20 Standard:	-35 °C to +110 °C
Zurcon® Z22 Premium:	-45 °C to +110 °C

Media:
Hydraulic fluids based on mineral oil: -35 °C to +110 °C
Synthetic and natural ester HEES, HETG: up to +60 °C
Flame-retardant hydraulic fluids HFA/HFB: up to +40 °C

Important Note:
The above stated limits for pressure and speed are maximum values individually. Friction heat generated by the combination of pressure and speed may cause local heat built-up. Care should be taken not to apply high values for pressure and speed at the same time.

■ Installation Recommendation

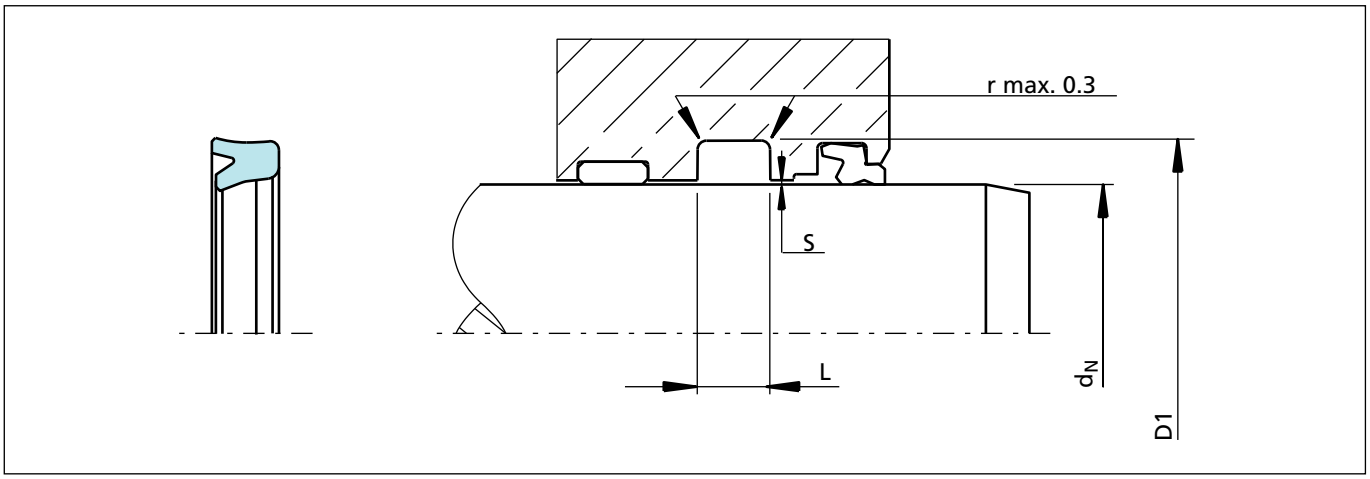

Figure 54 Installation drawing, Dimension "S" see Figure 53

Ordering Example (Metric)

Zurcon® U-Cup Type RU9

Rod diameter:	dN = 20.0 mm
Groove diameter:	D1 = 28.0 mm
Groove width:	L = 6.3 mm
TSS Part No.:	RU9000200 -

Material

Standard Zurcon®:	Z20
Special polyurethane:	93 Shore A
Colour:	turquoise

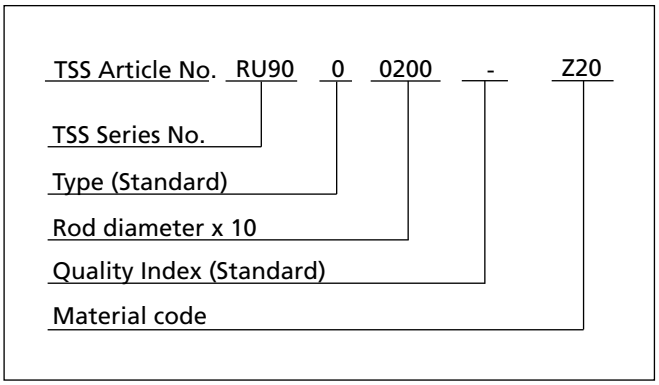

Table XXXIV Preferred Series / TSS Article No.

Rod Diameter	Groove Diameter	Groove Width	TSS Article No.
d_N f8/h9	**D1** H10	**L** + 0.25	
6.0	14.0	6.3	RU9000060-Z20
8.0	**16.0**	**6.3**	**RU9000080-Z20**
12.0	19.0	6.0	RU9000120-Z20
16.0	22.0	6.0	RU9100160-Z20
16.0	**24.0**	**6.3**	**RU9000160-Z20**
18.0	**26.0**	**6.3**	**RU9000180-Z20**
20.0	26.0	6.0	RU9100200-Z20
20.0	**28.0**	**6.3**	**RU9000200-Z20**
22.0	**30.0**	**6.3**	**RU9000220-Z20**

Dimensions and TSS article numbers printed in bold according to ISO 5597

Rod Diameter	Groove Diameter	Groove Width	TSS Article No.
d_N f8/h9	**D1** H10	**L** + 0.25	
22.0	**32.0**	**8.0**	**RU9100220-Z20**
25.0	**33.0**	**6.3**	**RU9000250-Z20**
28.0	**36.0**	**6.3**	**RU9000280-Z20**
28.0	**38.0**	**8.0**	**RU9100280-Z20**
30.0	40.0	11.0	RU9000300-Z20
32.0	**42.0**	**8.0**	**RU9000320-Z20**
35.0	**45.0**	**8.0**	**RU9000350-Z20**
36.0	**44.0**	**6.3**	**RU9100360-Z20**
36.0	44.0	9.0	RU9000360-Z20
36.0	**46.0**	**8.0**	**RU9200360-Z20**
40.0	**50.0**	**8.0**	**RU9000400-Z20**
45.0	**55.0**	**6.3**	**RU9100450-Z20**
45.0	**55.0**	**8.0**	**RU9000450-Z20**
50.0	**60.0**	**8.0**	**RU9000500-Z20**
50.0	**65.0**	**12.5**	**RU9100500-Z20**
50.0	60.0	11.0	RU9200500-Z20
55.0	65.0	8.0	RU9000550-Z20
56.0	**71.0**	**12.5**	**RU9000560-Z20**
60.0	68.0	7.0	RU9100600-Z20
60.0	**75.0**	**12.5**	**RU9000600-Z20**
63.0	**78.0**	**12.5**	**RU9000630-Z20**
65.0	75.0	8.0	RU9000650-Z20
70.0	**85.0**	**12.5**	**RU9000700-Z20**
75.0	83.0	7.0	RU9000750-Z20
80.0	**95.0**	**12.5**	**RU9100800-Z20**
90.0	100.0	7.5	RU9100900-Z20
90.0	**105.0**	**12.5**	**RU9000900-Z20**
95.0	115.0	13.0	RU9000950-Z20
100.0	**120.0**	**16.0**	**RU9001000-Z20**
105.0	120.0	12.5	RU9001050-Z20
110.0	120.0	11.0	RU9101100-Z20
110.0	**130.0**	**16.0**	**RU9001100-Z20**
115.0	125.0	11.0	RU9001150-Z20
120.0	135.0	12.5	RU9001200-Z20
125.0	**145.0**	**16.0**	**RU9001250-Z20**
140.0	**160.0**	**16.0**	**RU9001400-Z20**

Dimensions and TSS article numbers printed in bold according to ISO 5597

Zurcon® Buffer Seal

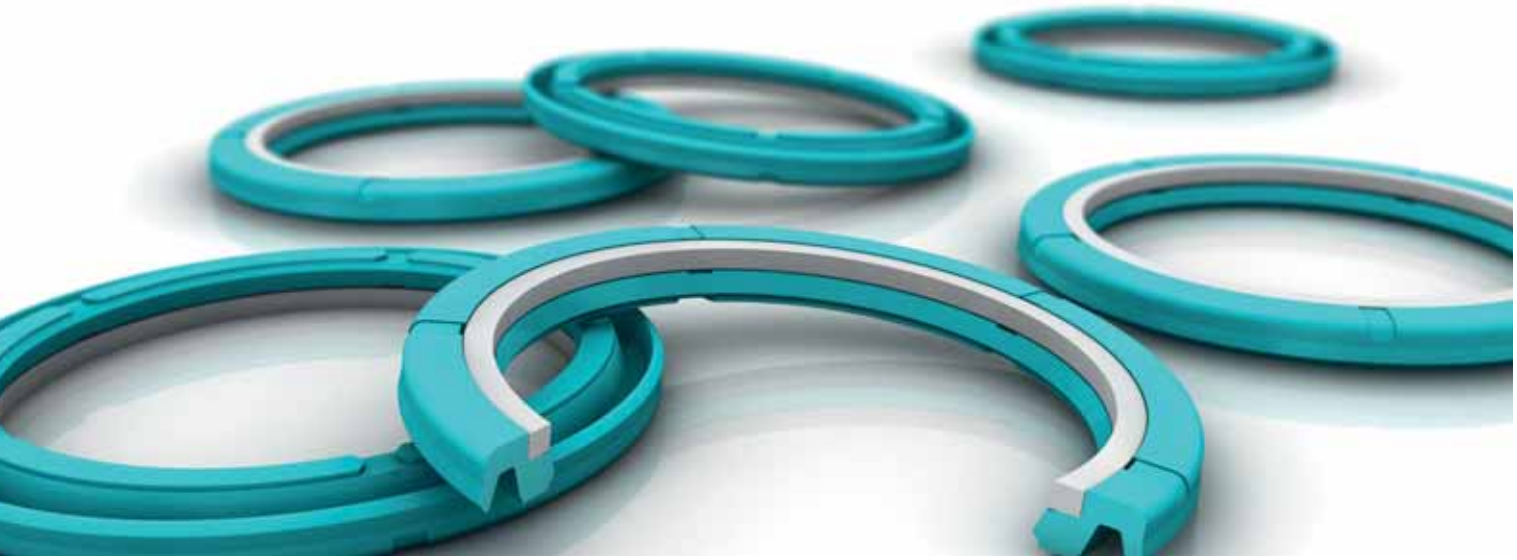

Single Acting

With integrated Back-Up Ring

Material:
Zurcon®

■ Zurcon® Buffer Seal

Introduction

In heavy duty applications, leak free performance and high service life cannot be assured by a single sealing element; therefore, specially developed "system seals" are arranged in series, building a "tandem configuration".

Each sealing element in a system has its specific function and their interaction needs to be secured to get a redundant sealing system. The primary seal in Zurcon® material has an excellent wear and extrusion resistance under extreme working conditions. It allows a fine lubrication film passing this first barrier, ensuring the necessary lubrication of the secondary sealing element for long service life.

The "tandem arrangement" requires an outstanding backpumping ability of the primary seal and the secondary seal, if a double acting scraper is installed.

Description

The single-acting Zurcon® Buffer Seal is designed as a heavy duty primary rod seal. The design of the product incorporates a combination of a Zurcon® sealing ring long with a Back-up ring.

By utilizing two materials, the performance of the product is enhanced and life is extended. The Zurcon® Buffer Seal is designed in such a way that sealing performance is not compromised under system pressure extremes. At low system pressure, the resilience of the Zurcon® material allows for effective sealing. At high system pressure, the Back-up ring is designed to contract into the extrusion gap, protecting the Zurcon® Seal ring.

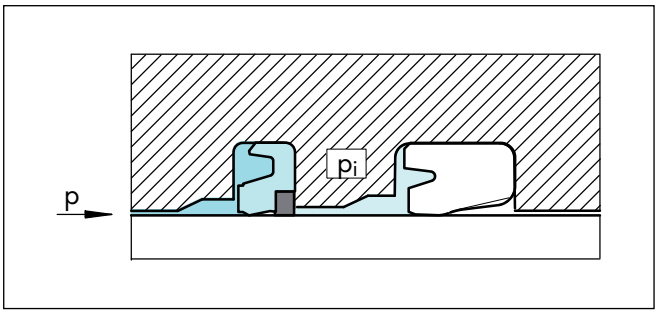

Figure 55 Tandem configuration

■ Characteristics

Zurcon® Sealing Ring
- *High abration resistance*
- *Low compression set*

Radial slots to avoid risk of "blow-by"

Dynamic lip designed to work at high pressure minimizing the friction and ensuring back pumping

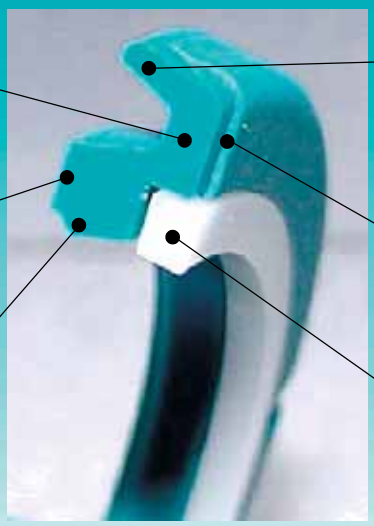

High flexible static lip optimised to relieve the inter-stage pressure

Radial channels to facilitate back pumping and pressure relieving capability

Solid POM anti-extrusion ring

Friction

The Zurcon® Buffer Seal with its special U shape and its rounded dynamic lip is able to guarantee an optimal pressure distribution and a constant lubrication of the rod across the entire pressure range.

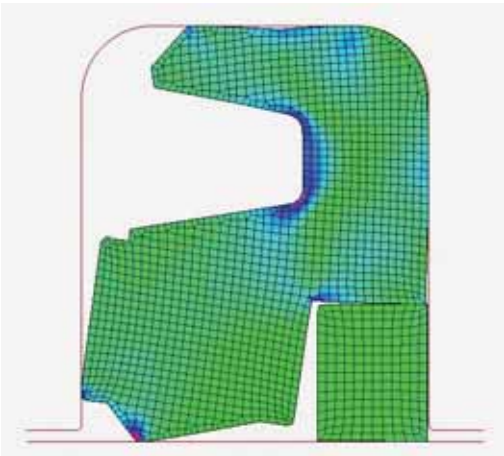

Figure 56 Zurcon® Buffer Seal un-pressurized

At un-pressurized condition head-on slots on dynamic lip assure a right positioning avoiding any risk of blow-by. The Zurcon® Buffer Seal is ready for a fast activation protecting the secondary seal from the peak of pressure.

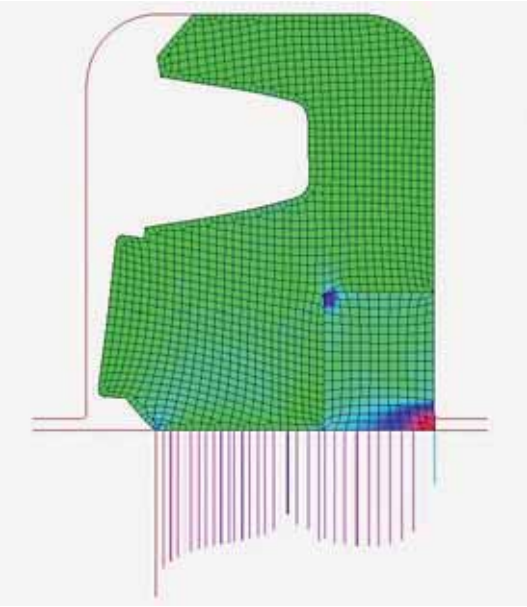

Figure 57 Pressure distribution at 40 MPa (5800 psi)

Pressure relief

In a tandem configuration the Zurcon® Buffer Seal must assure a quick and complete pressure relief in order to reduce friction and wear of the secondary seal increasing the life and overall sealing performance. The relief mechanism is activated by the special seal design through its thin, short and flexible static lip. The radial channels on the back side offer the fluid a direct stream up to both lips. A minimum difference between the pressure trapped and the pressure in the chamber is able to deflect the seal and recover the same pressure level.

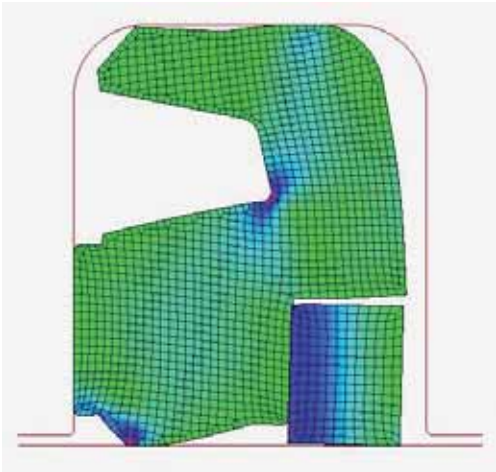

Figure 58 Pressure relief with a back pressure bigger of 0.5 MPa (72.5 psi)

Advantages

- Manufactured from Zurcon® and high-performance materials
- Conforms to ISO 7425/2 groove standards
- Suitable also for Stepseal® groove
- Excellent back-pumping over entire pressure range
- Resistant against high temperature and pressure
- Special design of dynamic seal lip for superior performance
- Designed with radial relief notches to prevent pressure
- trapping
- Superior wear and abrasion resistance
- Low compression set

Application Examples

Medium and Heavy duty applications:

- Mobile equipment
- Lift trucks
- Earthmoving equipment

Materials - Standard application

For hydraulic components in mineral oils or medias with good lubricating performance.

Seal Ring:	Zurcon® Z20 Standard polyurethane
Back-up Ring:	Polyacetal resin (POM)
Set reference:	Z2054

Materials - Low temperature application

Seal Ring:	Zurcon® Z22 Premium polyurethane
Back-up Ring:	Polyacetal resin (POM)
Set reference:	Z2254

The Zurcon® polyurethane has high abrasion resistance, a low compression set, high extrusion resistance and a wide temperature range.

Technical Data

Operating conditions:

The Zurcon® Buffer Seal is designed for high pressure rod sealing applications in extreme conditions.

Pressure:	Up to 40 MPa Up to 60 MPa peak
Velocity:	Up to 1 m/s
Temperature: Zurcon® Z20 Standard: Zurcon® Z22 Premium:	 -35 °C to +110 °C -45 °C to +110 °C
Media: Hydraulic fluids based onmineral oil:	 -35 °C to +110 °C
Synthetic and natural ester HEES, HETG:	up to +60 °C
Flame-retardant hydraulic fluids HFA/HFB:	up to +40 °C

■ Installation Recommendation

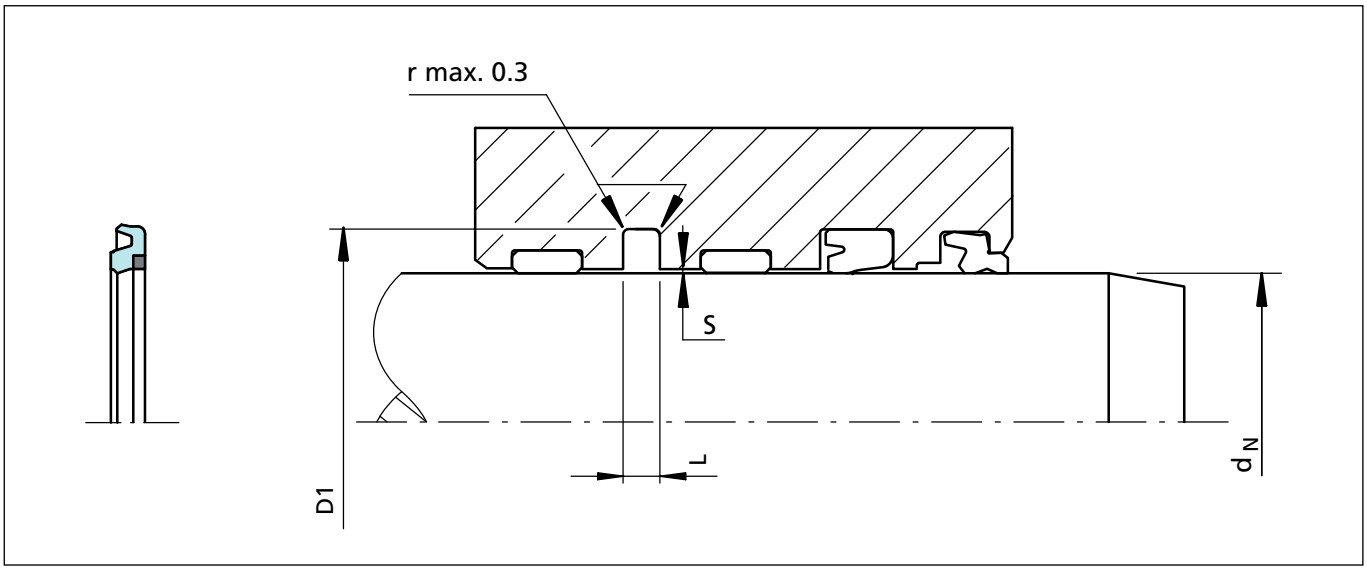

Figure 59 Installation drawing

TSS Ordering Example

Buffer Seal Type RUK
Rod diameter: d_N = 63.0 mm
Groove diameter: D1 = 78.5 mm
Groove width: L = 6.3 mm
TSS Part No.: RUK3B0630 -

Material

Compound: Z2054
(Zurcon® Z20 + POM Back-up Ring)

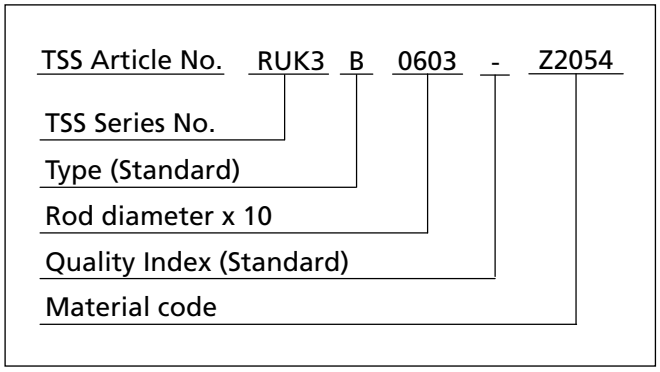

Table XXXV Installation dimensions

Rod Diameter	Groove Diameter	Groove Width	Radial Clearance	TSS Article No.
d_N f8/h9	**D1** +0.2	**L** +0.25	**S** max.	
40.0	55.5	6.3	0.4	RUK3B0400-Z2054
45.0	**60.5**	**6.3**	**0.4**	**RUK3B0450-Z2054**
50.0	**65.5**	**6.3**	**0.4**	**RUK3B0500-Z2054**
55.0	70.5	6.3	0.4	RUK3B0550-Z2054
56.0	**71.5**	**6.3**	**0.4**	**RUK3B0560-Z2054**
60.0	75.5	6.3	0.4	RUK3B0600-Z2054
63.0	**78.5**	**6.3**	**0.4**	**RUK3B0630-Z2054**
65.0	80.5	6.3	0.4	RUK3B0650-Z2054
70.0	**85.5**	**6.3**	**0.4**	**RUK3B0700-Z2054**

Rod Diameter	Groove Diameter	Groove Width	Radial Clearance	TSS Article No.
d_N f8/h9	**D1** +0.2	**L** +0.25	**S** max.	
75.0	90.5	6.3	0.4	RUK3B0750-Z2054
80.0	**95.5**	**6.3**	**0.4**	**RUK3B0800-Z2054**
85.0	100.5	6.3	0.4	RUK3B0850-Z2054
90.0	**105.5**	**6.3**	**0.4**	**RUK3B0900-Z2054**
95.0	**110.5**	**6.3**	**0.4**	**RUK3B0950-Z2054**
100.0	**115.5**	**6.3**	**0.4**	**RUK3B1000-Z2054**
105.0	120.5	6.3	0.4	RUK3B1050-Z2054
110.0	**125.5**	**6.3**	**0.4**	**RUK3B1100-Z2054**
115.0	130.5	6.3	0.4	RUK3B1150-Z2054
125.0	**140.5**	**6.3**	**0.4**	**RUK3B1250-Z2054**
140.0	**155.5**	**6.3**	**0.4**	**RUK3B1400-Z2054**

Turcon® Variseal® M2

Single Acting

Spring Energized Plastic U-Cup

Material:
Turcon® and Zurcon®

■ Turcon® Variseal® M2

Description

The Turcon® Variseal® M2 is a single-acting seal consisting of a U-shaped seal jacket and a V-shaped corrosion resistant spring.

Variseal® M2 has an asymmetric seal profile. The heavy profile of its dynamic lip with an optimized front angle offers good leakage control, reduced friction and long service life.

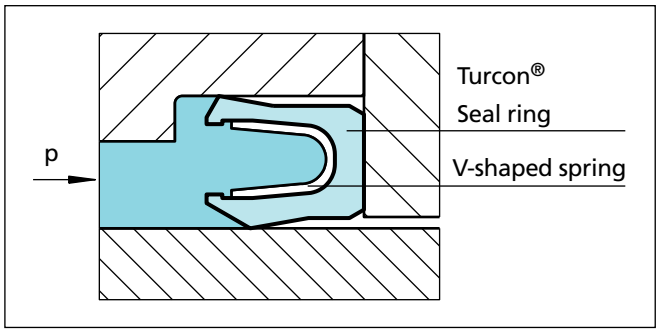

Figure 60 Turcon® Variseal® M2

At low and zero pressure, the metal spring provides the primary sealing force. As the system pressure increases, the main sealing force is achieved by the system pressure and ensures a tight seal from zero to high pressure.

The possibility of matching suitable materials for the seal and the spring allows use in a wide range of applications going beyond the field of hydraulics, e.g. in the chemical, pharmaceutical and foodstuff industry.

The Variseal® M2 can be sterilized and is available in a special Hi-Clean version where the spring cavity is filled with a Silicone gel preventing contaminants from being entrapped in the seal. This design also works well in applications involving mud, slurries or adhersives to keep grit from packing into the seal cavity and inhibiting the spring action.

For applications with highly viscous media, please contact our engineering department.

Variseal® M2 seals can be installed in grooves to AS4716 and ISO 3771. The seal can only be installed to a limited extent in closed grooves. Installation instructions, see Figure 15.

Advantages

- Resistant to most fluids and chemicals
- Low coefficients of friction
- Stick-slip-free operating for precise control
- High abrasion resistance and dimensional stability
- Can handle rapid changes in temperature
- No contamination in contact with foodstuffs, pharmaceutical and medicinal fluids
- High temperature range
- Sterilisable
- Unlimited shelf life.

Application Examples

Turcon® Variseal® M2 is the recommended sealing element for all applications requiring stick slip free operation as well as chemical resistance against almost all media such as:

- Valves
- Pumps
- Separators
- Actuators
- Dosing devices

It requires a mating surface of high quality to avoid high wear rate.

Technical Data

Operating conditions

Pressure:	For static loads: 40 MPa (400 Bar) For dynamic loads: 20 MPa (200 Bar)
Speed:	Reciprocating: Up to 15 m/s Rotating: Up to 1 m/s
Temperature:	-70 °C to +260 °C For specific applications beyond indicated range, please enquire
Media:	Virtually all fluids, chemicals and gases

Important Note:
The above data are maximum values, when using standard materials and geometries, and cannot be used at the same time. e.g. the maximum operating speed depends on material type, pressure, temperature and gap value. Temperature range also dependent on medium.

Materials

All materials used are physiologically safe. They contain no odour or taste-affecting substances.

The following material combination has proved effective for most fluid applications:

Seal ring: Turcon® T40

Spring: Stainless Steel Material No. AISI 301 Code S

For gas application use:

Seal ring: Turcon® T05/Zurcon® Z80

For use in accordance with the demands of the "Food and Drug Administration", suitable materials are available on request.

Table XXXVI Turcon® and Zurcon® Materials for Variseal® M2

Material, Applications, Properties	Code	Spring Material	Code	Operating Temp. * °C	Mating Surface Material	MPa max.
Turcon® T40 For all lubricating and non-lubricating hydraulic fluids, hydraulic oils without zinc, **water hydraulic, hard mating surfaces.** Surface texture not suitable for gases. Carbon fibre filled Colour: Grey	T40	AISI 301	S	-70 to +260	Steel, hardened Steel, chromeplated	40
Turcon® T05 For all lubricating hydraulic fluids, soft mating surfaces, **very good sliding properties**, low friction. Colour: Turquoise	T05	AISI 301	S	-70 to +260	Steel Steel, chromeplated Cast iron Stainless steel Aluminium Bronze Alloys	20
Zurcon® Z80 For lubricating and non-lubricating hydraulic fluids, high abrasion resistance, very good chemical resistance, limited temperature resistance. **FDA compliance.** Ultra high molecular weight polyethylen Colour: White to off-white	Z80	AISI 301	S	-70 to +80	Steel Steel, chromeplated Stainless steel Aluminium Bronze Ceramic coating	40
Zurcon® Z48 For tight sealing with long wear life, in applications without high temperatures or corrosive chemicals. Colour: Black	Z48	AISI 301	S	-60 to +130	Steel Steel, chromeplated Cast iron Stainless steel Aluminium Bronze Alloys Ceramic coating	40

* Depending on media. Highlighted material is standard.

■ Installation Recommendation

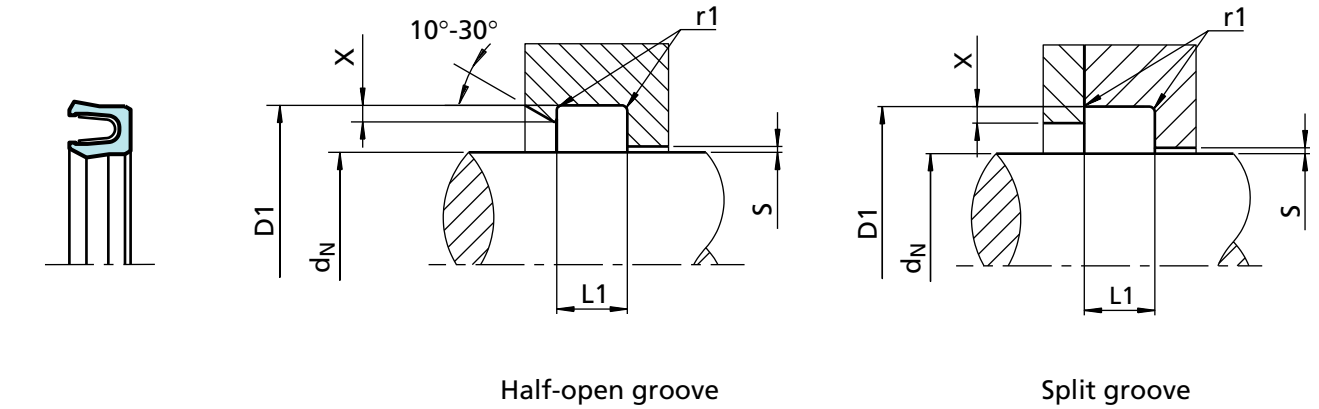

Figure 61 Installation drawing

Table XXXVII Installation dimensions

Series No.	Rod Diameter d_N h9		Groove Diameter	Groove Width	Radius	Step[2] Height	Radial Clearance S max. *			
	Recommended Range	Extended[1] Range	D1 H9	L1 +0.2	r_1	X min.	<2 MPa	<10 MPa	<20 MPa	<40 MPa
RVA0	3.0 - 9.9	3.0 - 40.0	d_N + 2.9	2.4	0.4	0.4	0.20	0.10	0.08	0.05
RVA1	10.0 - 19.9	6.0 - 200.0[3]	d_N + 4.5	3.6	0.4	0.6	0.25	0.15	0.10	0.07
RVA2	20.0 - 39.9	10.0 - 400.0[3]	d_N + 6.2	4.8	0.6	0.7	0.35	0.20	0.15	0.08
RVA3	40.0 - 119.9	20.0 - 700.0[3]	d_N + 9.4	7.1	0.8	0.8	0.50	0.25	0.20	0.10
RVA4	120.0 - 630.0	35.0 - 1600.0[3]	d_N + 12.2	9.5	0.8	0.9	0.60	0.30	0.25	0.12
RVA5	1000.0 - 2600.0	80.0 - 2600.0[3]	d_N + 19.0	15.0	0.8	0.9	0.90	0.50	0.40	0.20

* At pressures **> 40 MPa:** use diameter tolerance H8/f8 (bore/rod) in area of the seal.
[1] Available on request
[2] Maximum X = 0.02 x d_N
Note: Recommended Step Height is not always obtainable
[3] By diameters larger than "Recommended Range": the tolerance on d_N and D_1 is changed to h8/H8.By pressure above 40 MPa, please contact Trelleborg Sealing Solutions

Ordering Example

Turcon® Variseal® M2, recommended range, Series RVA3 (from Table XXXVII).
Rod diameter: d_N = 80.0 mm
TSS Part No.: RVA300800 (from Table XXXVIII)

For other seal and spring materials please contact the Trelleborg Sealing Solutions representative.

** For diameters ≥ 1000.0 mm multiply only by factor 1.
Example: RVA5 for diameter 1200.0 mm.
TSS Article No.: RVA5**X1200** - T40S.

TSS Article No. RVA3 0 0800 - T40 S (D)

- TSS Series No.
- Type (Standard)
- Rod diameter x 10**
- Quality Index (Standard)
- Material code (Seal ring)
- Material code (Spring)
- Hi Clean-option

Table XXXVIII Installation dimensions / TSS Part No.

Rod Diameter	Groove Diameter	Groove Width	TSS Part No.
d_N h9	D_1 H9	L1 +0.2	
3.0	5.9	2.4	RVA000030
4.0	**6.9**	**2.4**	**RVA000040**
5.0	**7.9**	**2.4**	**RVA000050**
6.0	**8.9**	**2.4**	**RVA000060**
8.0	**10.9**	**2.4**	**RVA000080**
10.0	**14.5**	**3.6**	**RVA100100**
12.0	**16.5**	**3.6**	**RVA100120**
14.0	**18.5**	**3.6**	**RVA100140**
15.0	19.5	3.6	RVA100150
16.0	**20.5**	**3.6**	**RVA100160**
18.0	**22.5**	**3.6**	**RVA100180**
20.0	**26.2**	**4.8**	**RVA200200**
22.0	**28.2**	**4.8**	**RVA200220**
25.0	**31.2**	**4.8**	**RVA200250**
28.0	**34.2**	**4.8**	**RVA200280**
30.0	36.2	4.8	RVA200300
32.0	**38.2**	**4.8**	**RVA200320**
35.0	41.2	4.8	RVA200350
36.0	**42.2**	**4.8**	**RVA200360**
40.0	**49.4**	**7.1**	**RVA300400**
42.0	51.4	7.1	RVA300420
45.0	**54.4**	**7.1**	**RVA300450**
48.0	57.4	7.1	RVA300480
50.0	**59.4**	**7.1**	**RVA300500**
52.0	61.4	7.1	RVA300520
55.0	64.4	7.1	RVA300550
56.0	**65.4**	**7.1**	**RVA300560**
60.0	69.4	7.1	RVA300600
63.0	**72.4**	**7.1**	**RVA300630**
65.0	74.4	7.1	RVA300650
70.0	**79.4**	**7.1**	**RVA300700**
75.0	84.4	7.1	RVA300750
80.0	**89.4**	**7.1**	**RVA300800**
85.0	94.4	7.1	RVA300850
90.0	**99.4**	**7.1**	**RVA300900**
95.0	104.4	7.1	RVA300950

Rod Diameter	Groove Diameter	Groove Width	TSS Part No.
d_N h9	D_1 H9	L1 +0.2	
100.0	**109.4**	**7.1**	**RVA301000**
105.0	114.4	7.1	RVA301050
110.0	**119.4**	**7.1**	**RVA301100**
115.0	124.4	7.1	RVA301150
120.0	132.2	9.5	RVA401200
125.0	**137.2**	**9.5**	**RVA401250**
130.0	142.2	9.5	RVA401300
135.0	147.2	9.5	RVA401350
140.0	**152.2**	**9.5**	**RVA401400**
150.0	162.2	9.5	RVA401500
160.0	**172.2**	**9.5**	**RVA401600**
170.0	182.2	9.5	RVA401700
180.0	**192.2**	**9.5**	**RVA401800**
190.0	202.2	9.5	RVA401900
200.0	**212.2**	**9.5**	**RVA402000**
210.0	222.2	9.5	RVA402100
220.0	**232.2**	**9.5**	**RVA402200**
230.0	242.2	9.5	RVA402300
240.0	252.2	9.5	RVA402400
250.0	**262.2**	**9.5**	**RVA402500**
280.0	**292.2**	**9.5**	**RVA402800**
300.0	312.2	9.5	RVA403000
320.0	**332.2**	**9.5**	**RVA403200**
350.0	362.2	9.5	RVA403500
360.0	**372.2**	**9.5**	**RVA403600**
400.0	412.2	9.5	RVA404000

The rod diameters in **bold** type correspond to the recommendations of ISO 3320.
Other dimensions and all intermediate sizes up to 2.500 mm diameter including imperial (inch) sizes can be supplied.

Turcon® VL Seal®

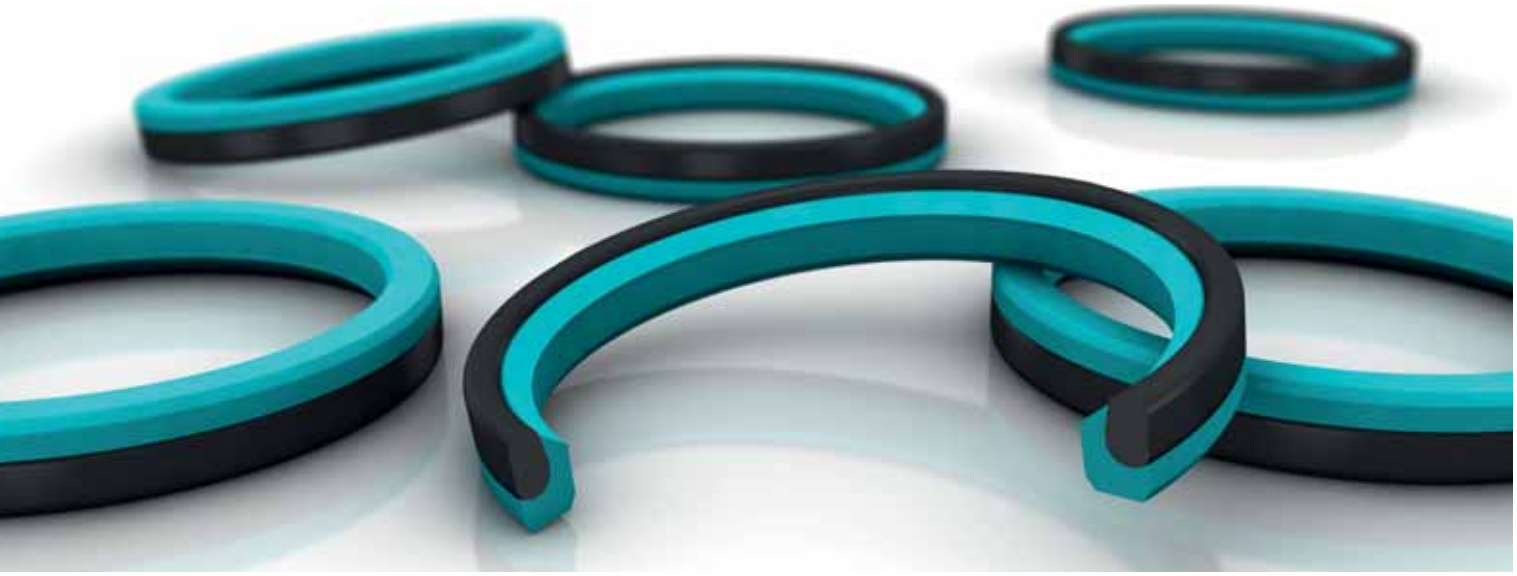

Single Acting

Rubber Energized Plastic Faced Seal

Material:
Turcon® and Zurcon®

■ Turcon® VL Seal® *

Description

Turcon® VL Seal® is a new generation unidirectional Rod seal for the same groove dimensions as standard O-Rings, see Figure 62.

The design has taken the latest empirical and theoretical experience into account in order to optimise performance, friction, leakage and service life. This has been achieved through FEA simulation, in-house testing and qualification in the most demanding Aerospace applications.

The VL Seal® has no static lip, instead static sealing is effectively provided by the O-Ring. The O-Ring is protected from damage under pressure cycles by the concave seal back which supports the O-Ring and keeps it in position also at high working pressure.

The VL Seal® is designed with hydrodynamic back-pumping effect, which allows the seal to relieve pressure trapped between tandem seals or between seals and double-acting scrapers.

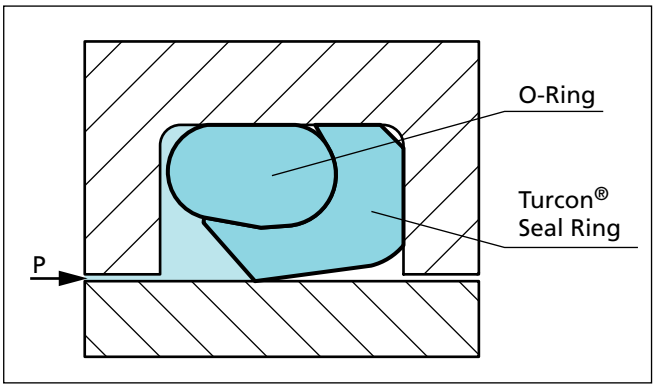

Figure 62 Turcon® VL Seal® mounted in O-Ring groove

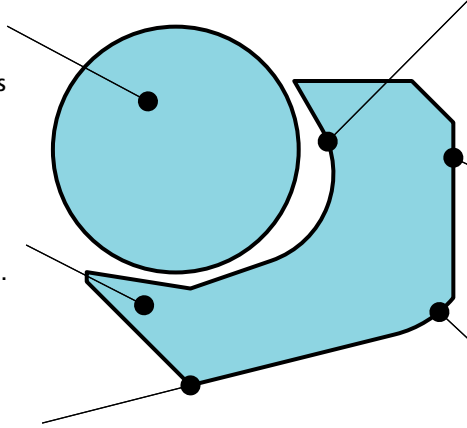

Elastomer O-Ring
High flexibility to satisfy hardware tolerances. High static sealing function eliminates fluid flow in the groove. Elastomer materials available to meet a wide variety of service conditions.

Stabilising Wing
Keeps the O-Ring in the correct position also when un-pressurised. Assists pressure transfer from O-Ring to seal lip. Stabilises the seal profile.

Pressure Relieved Sealing Lip
Optimised sealing lip position for high sealing efficiency. Short dynamic contact area for low friction and torque.

Contoured O-Ring Contact Zone
Stabilises the O-Ring position in the seal groove. Secures optimal pressure transfer to dynamic sealing lip. Prevents O-Ring nibbling.

Stabilised Groove Contact
Strong seal profile with full groove wall contact for stable seal position. Prevents premature extrusion of seal material into the radial clearance.

Contoured Rear Chamfer for Hydrodynamic Back-pumping
Improved back-pumping of residual oil film for increased sealing efficiency. Increased radial clearance.

* Patent pending. (US Patent No. 6,497,415)

Method of operation

The sealing mechanism of the Turcon® VL Seal® is based on the hydrodynamic properties of the seal. The specially formed seal edge has a steep contact pressure gradient on the high pressure side and a shallow contact pressure gradient on the low pressure side. This ensures that the fluid film adhering to the piston rod is returned to the high pressure chamber on the return stroke of the rod. This prevents the micro-fluid layer, which is carried out of the high pressure chamber when the piston rod is extended, from causing leaks.

This return delivery property prevents the build-up of inter-seas pressure normally associated with tandem seal configurations (Figure 63). Inter-seal pressure depends on the system pressure, speed, stroke length and groove design.

Advantages

- Groove design with shallow radial depth
- Tight leakage control
- Low friction with small contact area between seal and counter surface
- Featuring the Turcon® Stepseal® 2K back pumping effect
- Utilize standard O-Ring installation groove
- Available in all diameter sizes from 6 to 2600 mm

Application Examples

The VL Seal® is recommended for hydraulics and general machine construction as an alternative to Turcon® Stepseal® 2K and other single acting seals according to their individual advantages:

- Machine tools
- Automation
- Handling devises
- Telescopic cylinders
- Automobile industry
- Aerospace hydraulics
- Servo hydraulics
- Valves
- Valve stems
- Down-hole tools
- O-Ring replacement

Technical Data

Operating conditions:

Pressure:	Up to 60 MPa
Speed:	Up to 15 m/s with reciprocating movements, requency up to 5 Hz
Temperature:	-45 °C to +200 °C (depending on O-Ring material)
Media:	Mineral oil-based hydraulic fluids, flame retardant hydraulic fluids, environmentally safe hydraulic, fluids (bio-oils), phosphate ester, water and others, depending on the O-Ring material compatibility (see Table XXXIX)
Clearance:	The maximum permissible radial clearance Smax is shown in Table XL, as a function of the operating pressure and functional diameter.

Materials

The following material combinations have proven effective for hydraulic applications:

All round material for hydraulic applications with reciprocating, short stroke or helical movements in mineral oils, flame retardant hydraulic fluids HFC, phosphate ester, bio-oils or fluids having less satisfactory lubricating properties:

Turcon® VL Seal ®:	Turcon® M12	
O-Ring:	NBR, 70 Shore A FKM, 70 Shore A	N V
Set code:	M12N or M12V	

For medium to heavy applictions with reciprocating movements in mineral oils and other media with good lubrication.

Turcon® VL Seal ®:	Turcon® T46	
O-Ring:	NBR, 70 Shore A FKM, 70 Shore A	N V
Set code:	T46N or T46V	

Zurcon® Z52 is recommended for VL Seal® as alternative to polyurethane U-Cups especially outside the size range of these products.

For specific applications, all Turcon® materials are available. Other viable material combinations are listed in Table XXXIX.

Installation dimensions

The VL Seal® is dimensionally interchangeable with seals for O-Ring housings, like Vectorseal™, Double Delta® and Turcon® Variseal® M2. Groove dimensions, radial clearances and recommended seal series in relation to diameter are as illustrated in Table XL.

VL Seal® is preferably installed in closed grooves according to Figure 63 page 159. Depending on type and size installation in split grooves is also possible. Recommended minimum diameters for installation in closed grooves see Table VII page 13.

Redundant Sealing System

In many applications, secondary seal systems are demanded. Figure 63 shows such a tandem configuration with the VL Seal®.

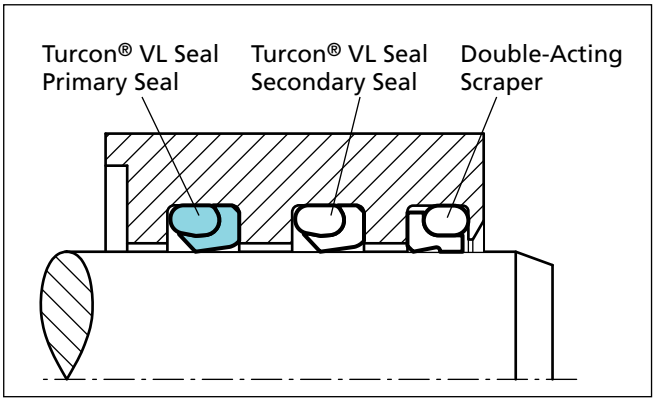

Figure 63 Turcon® VL Seal® in tandem configuration

Radial Notch

Turcon® VL Seal® can be delivered with radial notches at the "back side" (low pressure side).

This is an advantage if the seal is used in rotary applications. The notches can prevent the seal from rotating in the groove by avoiding pressurised fluid being trapped between seal and groove corner.

Table XXXIX Turcon® and Zurcon® Materials for VL Seal®

Material, Applications, Properties	Code	O-Ring Material Shore A	Code	O-Ring Operating Temp.*°C	Mating Surface Material	MPa max. Dyna-mic
Turcon® M12 First material choice for seals in linear motion Overall improved properties For new constructions and updating For all commonly applied hydraulic fluids including fluids with low lubrication performance Lowest friction and best sliding properties Lowest wear on seals Improved absorption of abrasive contaminants No wear or abrasion of counter surface Mineral fibre and Additives filled Colour: Dark grey	M12	NBR- 70	N	-30 to +100	Steel Steel hardened Steel chrome plated (rod) Steel plated (rod) Cast iron Stainless steel Titanium	50
		NBR- 70 Low temp	T	45 to +80		
		FKM- 70	V	-10 to +200		
Turcon® T05 For lubricating fluids Also for gas service Very low friction Very good sliding and sealing properties Colour: Turquoise	T05	NBR- 70	N	-30 to +100	Steel Steel hardened Steel chrome plated (rod)	20
		NBR- 70 Low temp.	T	-45 to +80		
		FKM- 70	V	-10 to +200		
Turcon® T08 For lubricating fluids and linear motion Very high compressive strength and extrusion resistance Hard counter surfaces is recommended Bronze filled Colour: Light to dark brown, which may have variations in shading	T08	NBR- 70	N	-30 to +100	Steel hardened Steel chrome plated (rod) Cast iron	60
		NBR- 70 Low temp.	T	-45 to +80		
		FKM- 70	V	-10 to +200		
Turcon® T29 For lubricating and non-lubricating fluids Good extrusion resistance Surface texture is not suitable for gas sealing Not for electrically conducting fluids Carbon fibre filled Colour: Grey	T29	NBR- 70 S	N	-30 to +100	Steel Steel hardened Steel chrome plated (rod) Cast iron Stainless steel	30
		NBR- 70 Low temp.	T	-45 to +80		
		FKM- 70	V	-10 to +200		
		EPDM- 70	E**	-45 to +145		
Turcon® T40 For lubricating and non-lubricating fluids High frequency and short strokes **Water hydraulics** Surface texture is not suitable for gas sealing Carbon fibre filled Colour: Grey.	T40	NBR- 70	N	-30 to +100	Steel Steel hardened Steel chrome plated (rod) Cast iron Stainless steel Aluminium	25
		NBR- 70 Low temp.	T	-45 to +80		
		FKM- 70	V	-10 to +200		
		EPDM- 70	E**	-45 to +145		

* The O-Ring Operation Temperature is only valid in mineral hydraulic oil. ** Material not suitable for mineral oils.
*** Max. Ø 2200 mm. Highlighted materials are standard.

Material, Applications, Properties	Code	O-Ring Material Shore A	Code	O-Ring Operating Temp.*°C	Mating Surface Material	MPa max. Dyna-mic
Turcon® T46 For lubricated hydraulics in linear motion High compressive strength High extrusion resistance Very good sliding and wear properties BAM tested Bronze filled Colour: Light to dark brown, which may have variations in shading.	T46	NBR- 70	N	-30 to +100	Steel hardened Steel chrome plated (rod) Cast iron	50
		NBR - 70 Low temp.	T	-45 to +80		
		FKM- 70	V	-10 to +200		
Zurcon® Z51*** For mineral oil based fluids **Very high abrasion and extrusion resistance** For counter surface with rougher surface finish Limited chemical resistance Max. working temperature 110 °C Cast polyurethane Colour: Yellow to light-brown.	Z51	NBR- 70	N	-30 to +100	Steel Steel hardened Steel chrome plated (rod) Cast iron Stainless steel Ceramic coating	60
		NBR- 70 Low temp.	T	-45 to +80		
Zurcon® Z52*** For mineral oil based fluids Linear and slowly turning movements High abrasion resistance For counter surface with rougher surface finish Good extrusion resistance Limited chemical resistance Max. working temperature 110 °C Cast polyurethane Colour: Turquoise.	Z52	NBR- 70	N	-30 to +100	Steel Steel hardened Steel chrome plated (rod) Cast iron Stainless steel Ceramic coating	25
		NBR- 70 Low temp.	T	-45 to +80		
Zurcon® Z80 For lubricating and non-lubricating fluids Water based fluids, air and gases Dry air pneumatics High abrasion and extrusion resistance For service in abrasive conditions and media with particles Good chemical resistance Limited temperature capability (-60 to +80 °C) UHMWPE (Ultra High Molecular Weight Polyethylene) Colour: White to off-white.	Z80	NBR- 70	N	-30 to +100	Steel Steel hardened Steel chrome plated (rod) Stainless steel Aluminium Ceramic coating	35
		NBR- 70 Low temp.	T	-45 to +80		
		EPDM- 70	E**	-45 to(+145)		

* The O-Ring Operation Temperature is only valid in mineral hydraulic oil. ** Material not suitable for mineral oils.
*** Max. Ø 2200 mm. Highlighted materials are standard.

■ Installation Recommendation

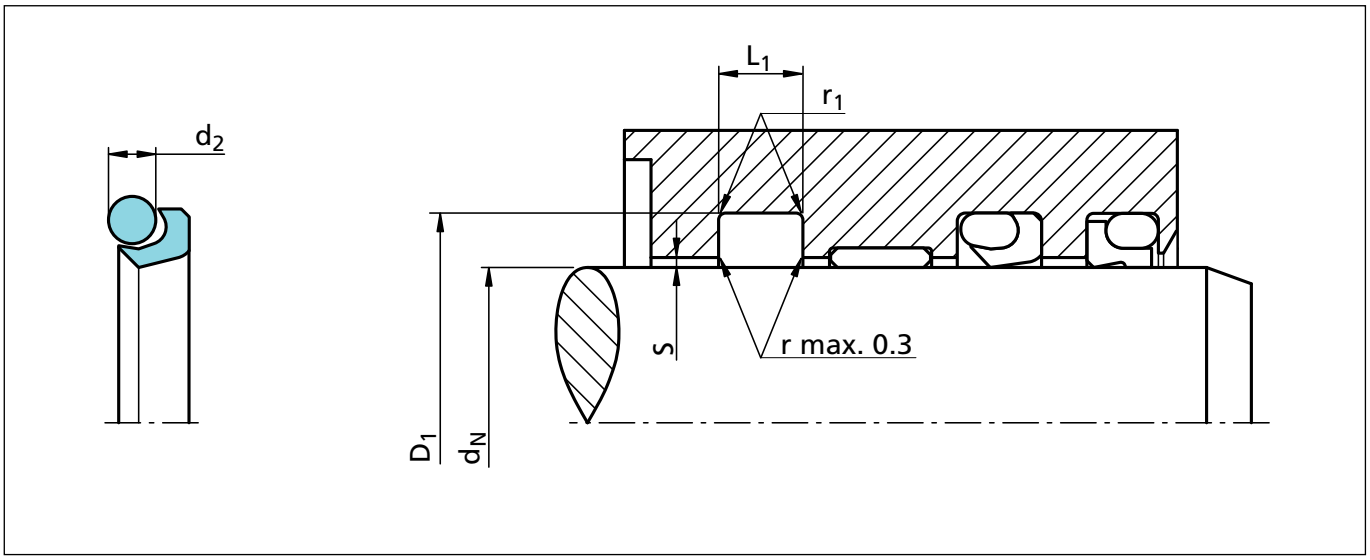

Figure 64 Installation drawing

Table XL Installation dimensions - Standard Recommendations

Rod Diameter d_N f8/h9			Groove Diameter D_1 H9	Groove Width L_1 +0.2	Radius r_1	Radial Clearance* S_{max}			O-Ring Cross-Section d_2
Series No.	Standard Application	Available Range				10 MPa	20 MPa	30 MPa	
REL10	10 - 19.9	6 - 100.0	d_N + 4.5	3.6	0.4	0.40	0.25	0.15	1.78
REL20	20 - 39.9	10 - 200.0	d_N + 6.2	4.8	0.6	0.40	0.25	0.20	2.62
REL30	40 - 119.9	20 - 400.0	d_N + 9.4	7.1	0.8	0.50	0.30	0.20	3.53
REL40	120 - 399.9	35 - 650.0	d_N + 12.2	9.5	0.8	0.60	0.35	0.25	5.33
REL50	400 - 649.9	125 - 999.9	d_N + 15.9	12.2	0.8	0.70	0.50	0.30	7.00
REL60	650 - 999.9	400 - 999.9	d_N + 19.0	15.0	0.8	1.00	0.70	0.60	8.40
REL6X	≥ 1000	1000 - 2600	d_N + 19.0	15.0	0.8	1.00	0.70	0.60	8.40

* At pressures **> 40 MPa** use diameter tolerance H8/f8 (bore/rod) in area behind the seal; or consult TSS for alternative profiles.
TSS Slydring®/Wear Rings are not applicable at very small radial clerance; consult the Slydring® catalog.
For minimum diameter installation in closed grooves see Table VII page 13

Ordering example

Turcon® VL Seal® complete with O-Ring, standard application:

Series: REL40 (from Table XL).
Rod diameter: d_N = 250.0 mm
TSS Part No.: REL402500 (from Table XLI).

Select the material from Table XXXIX.
The corresponding code numbers are appended to the TSS Part No.
Together these form the TSS Article Number.

The TSS Article Number for all intermediate sizes not shown in Table XLI can be determined following the example below.

TSS Article No. REL4 0 2500 - M12 N

- Series No. — REL4
- Type (Standard)** — 0
- Rod diameter x 10* — 2500
- Quality Index (Standard) — -
- Material Code (Seal Ring) — M12
- Material Code (O-Ring) — N

* For diameters ≥ 1000.0 mm multiply only by factor 1.
Example: REL6X for diameter 1200.0 mm.
TSS Article No.: REL6X**1200** - M12N.

** Use suffix "N" for seals with radial notches, for diameter dN < 1000 mm.

(Radial notches for diameter dN ≥1000 mm special part number is required).

Table XLI Installation dimensions - Part No.

Rod	Groove Dia.	Groove Width	TSS Part No.	O-Ring Sizes
d_N f8/h9	D_1 H9	L_1 +0.2		
6.0	**10.5**	**3.6**	**REL100060**	**7.10 x 1.80**
8.0	**12.5**	**3.6**	**REL100080**	**9.25 x 1.78**
9.0	13.5	3.6	REL100090	10.60 x 1.80
10.0	**14.5**	**3.6**	**REL100100**	**11.20 x 1.80**
12.0	**16.5**	**3.6**	**REL100120**	**13.20 x 1.80**
12.7	17.2	3.6	REL100127	14.00 x 1.78
14.0	**18.5**	**3.6**	**REL100140**	**15.60 x 1.78**
15.0	19.5	3.6	REL100150	17.17 x 1.78
16.0	**20.5**	**3.6**	**REL100160**	**17.17 x 1.78**
18.0	**22.5**	**3.6**	**REL100180**	**19.00 x 1.80**
19.0	25.2	4.8	REL200190	20.29 x 2.62
20.0	**24.5**	**3.6**	**REL100200**	**21.95 x 1.78**
20.0	**26.2**	**4.8**	**REL200200**	**21.89 x 2.62**
22.0	**26.5**	**3.6**	**REL100220**	**23.52 x 1.78**
22.0	**28.2**	**4.8**	**REL200220**	**23.47 x 2.62**
24.0	28.5	3.6	REL100240	25.12 x 1.78
25.0	29.5	3.6	REL100250	26.70 x 1.78
25.0	31.2	4.8	REL200250	26.64 x 2.62
25.4	29.9	3.6	REL100254	26.70 x 1.78
25.4	31.6	4.8	REL200254	26.64 x 2.62
26.0	30.5	3.6	REL100260	28.30 x 1.78

Rod	Groove Dia.	Groove Width	TSS Part No.	O-Ring Sizes
d_N f8/h9	D_1 H9	L_1 +0.2		
26.0	32.2	4.8	REL200260	28.24 x 2.62
28.0	32.5	3.6	REL100280	29.87 x 1.78
28.0	**34.2**	**4.8**	**REL200280**	**29.82 x 2.62**
30.0	34.5	3.6	REL100300	31.47 x 1.78
30.0	36.2	4.8	REL200300	31.42 x 2.62
32.0	36.5	3.6	REL100320	33.05 x 1.78
32.0	**38.2**	**4.8**	**REL200320**	**34.59 x 2.62**
35.0	39.5	3.6	REL100350	37.82 x 1.78
35.0	41.2	4.8	REL200350	36.17 x 2.62
36.0	40.5	3.6	REL100360	37.82 x 1.78
36.0	**42.2**	**4.8**	**REL200360**	**37.77 x 2.62**
37.0	41.5	3.6	REL100370	37.82 x 1.78
37.0	43.2	4.8	REL200370	39.34 x 2.62
38.0	44.2	4.8	REL200380	39.34 x 2.62
38.0	47.4	7.1	REL300380	40.87 x 3.53
40.0	**46.2**	**4.8**	**REL200400**	**42.52 x 2.62**
40.0	**49.4**	**7.1**	**REL300400**	**44.04 x 3.53**
42.0	48.2	4.8	REL200420	44.12 x 2.62
42.0	51.4	7.1	REL300420	44.04 x 3.53
43.0	49.2	4.8	REL200430	44.12 x 2.62
45.0	**51.2**	**4.8**	**REL200450**	**47.29 x 2.62**

Rod d_N f8/h9	Groove Dia. D_1 H9	Groove Width L_1 +0.2	TSS Part No.	O-Ring Sizes
45.0	**54.4**	**7.1**	**REL300450**	**47.22 x 3.53**
48.0	54.2	4.8	REL200480	50.47 x 2.62
48.0	57.4	7.1	REL300480	50.39 x 3.53
50.0	**56.2**	**4.8**	**REL200500**	**52.07 x 2.62**
50.0	**59.4**	**7.1**	**REL300500**	**53.57 x 3.53**
50.8	57.0	4.8	REL200508	52.07 x 2.62
50.8	60.2	7.1	REL300508	53.57 x 3.53
52.0	58.2	4.8	REL200520	53.64 x 2.62
52.0	61.4	7.1	REL300520	56.74 x 3.53
54.0	63.4	7.1	REL300540	56.74 x 3.53
55.0	61.2	4.8	REL200550	56.82 x 2.62
55.0	64.4	7.1	REL300550	59.92 x 3.53
56.0	**62.2**	**4.8**	**REL200560**	**58.42 x 2.62**
56.0	**65.4**	**7.1**	**REL300560**	**59.92 x 3.53**
56.0	68.2	9.5	REL400560	59.69 x 5.33
60.0	66.2	4.8	REL200600	61.60 x 2.62
60.0	69.4	7.1	REL300600	63.09 x 3.53
63.0	**69.2**	**4.8**	**REL200630**	**64.77 x 2.62**
63.0	**72.4**	**7.1**	**REL300630**	**66.27 x 3.53**
65.0	71.2	4.8	REL200650	66.34 x 2.62
65.0	74.4	7.1	REL300650	69.44 x 3.53
70.0	76.2	4.8	REL200700	71.12 x 2.62
70.0	**79.4**	**7.1**	**REL300700**	**72.62 x 3.53**
70.0	82.2	9.5	REL400700	75.57 x 5.33
72.0	78.2	4.8	REL200720	75.87 x 2.62
75.0	81.2	4.8	REL200750	76.63 x 2.62
75.0	84.4	7.1	REL300750	78.97 x 3.53
76.2	85.6	7.1	REL300762	78.97 x 3.53
80.0	86.2	4.8	REL200800	82.22 x 2.62
80.0	**89.4**	**7.1**	**REL300800**	**82.14 x 3.53**
80.0	92.2	9.5	REL400800	85.09 x 5.33
85.0	91.2	4.8	REL200850	88.57 x 2.62
85.0	94.4	7.1	REL300850	88.49 x 3.53
85.0	97.2	9.5	REL400850	88.27 x 5.33
90.0	96.2	4.8	REL200900	94.92 x 2.62
90.0	**99.4**	**7.1**	**REL300900**	**94.84 x 3.53**

Rod d_N f8/h9	Groove Dia. D_1 H9	Groove Width L_1 +0.2	TSS Part No.	O-Ring Sizes
90.0	102.2	9.5	REL400900	94.62 x 5.33
95.0	101.2	4.8	REL200950	96.63 x 2.62
95.0	104.4	7.1	REL300950	98.02 x 3.53
100.0	106.2	4.8	REL201000	101.27 x 2.62
100.0	**109.4**	**7.1**	**REL301000**	**104.37 x 3.53**
100.0	112.2	9.5	REL401000	104.14 x 5.33
101.6	111.0	7.1	REL301016	104.37 x 3.53
105.0	114.4	7.1	REL301050	107.54 x 3.53
105.0	117.2	9.5	REL401050	110.49 x 5.33
110.0	116.2	4.8	REL201100	113.97 x 2.62
110.0	**119.4**	**7.1**	**REL301100**	**113.89 x 3.53**
110.0	122.2	9.5	REL401100	113.67 x 5.33
115.0	124.4	7.1	REL301150	117.07 x 3.53
120.0	129.4	7.1	REL301200	123.42 x 3.53
120.0	132.2	9.5	REL401200	123.19 x 5.33
125.0	**134.4**	**7.1**	**REL301250**	**129.77 x 3.53**
125.0	137.2	9.5	REL401250	129.54 x 5.33
127.0	136.4	7.1	REL301270	129.77 x 3.53
130.0	139.4	7.1	REL301300	132.94 x 3.53
130.0	142.2	9.5	REL401300	132.72 x 5.33
135.0	141.2	4.8	REL201350	139.37 x 2.62
135.0	144.4	7.1	REL301350	139.29 x 3.53
140.0	146.2	4.8	REL201400	145.72 x 2.62
140.0	**149.4**	**7.1**	**REL301400**	**142.47 x 3.53**
140.0	152.2	9.5	REL401400	145.42 x 5.33
145.0	154.4	7.1	REL301450	148.82 x 3.53
145.0	157.2	9.5	REL401450	148.49 x 5.33
150.0	159.4	7.1	REL301500	158.34 x 3.53
150.0	162.2	9.5	REL401500	158.12 x 5.33
155.0	164.4	7.1	REL301550	158.34 x 3.53
160.0	**169.4**	**7.1**	**REL301600**	**164.69 x 3.53**
160.0	**172.2**	**9.5**	**REL401600**	**164.47 x 5.33**
165.0	174.4	7.1	REL301650	171.04 x 3.53
170.0	179.4	7.1	REL301700	177.39 x 3.53
170.0	182.2	9.5	REL401700	177.17 x 5.33
175.0	184.4	7.1	REL301750	177.39 x 3.53

Rod d_N f8/h9	Groove Dia. D_1 H9	Groove Width L_1 +0.2	TSS Part No.	O-Ring Sizes
180.0	**189.4**	**7.1**	**REL301800**	**183.74 x 3.53**
180.0	**192.2**	**9.5**	**REL401800**	**183.52 x 5.33**
185.0	194.4	7.1	REL301850	190.09 x 3.53
185.0	197.2	9.5	REL401850	189.87 x 5.33
190.0	199.4	7.1	REL301900	196.44 x 3.53
190.0	202.2	9.5	REL401900	196.22 x 5.33
195.0	204.4	7.1	REL301950	202.79 x 3.53
200.0	209.4	7.1	REL302000	202.79 x 3.53
200.0	**212.2**	**9.5**	**REL402000**	**202.57 x 5.33**
205.0	217.2	9.5	REL402050	208.92 x 5.33
210.0	222.2	9.5	REL402100	215.27 x 5.33
215.0	227.2	9.5	REL402150	221.62 x 5.33
220.0	**232.2**	**9.5**	**REL402200**	**227.97 x 5.33**
225.0	237.2	9.5	REL402250	227.97 x 5.33
230.0	239.4	7.1	REL302300	234.54 x 3.53
230.0	242.2	9.5	REL402300	234.32 x 5.33
235.0	247.2	9.5	REL402350	240.67 x 5.33
240.0	252.2	9.5	REL402400	247.02 x 5.33
245.0	257.2	9.5	REL402450	253.37 x 5.33
250.0	**262.2**	**9.5**	**REL402500**	**253.37 x 5.33**
270.0	282.2	9.5	REL402700	278.77 x 5.33
275.0	287.2	9.5	REL402750	278.77 x 5.33
280.0	**292.2**	**9.5**	**REL402800**	**291.47 x 5.33**
285.0	297.2	9.5	REL402850	291.47 x 5.33
290.0	302.2	9.5	REL402900	304.17 x 5.33
295.0	307.2	9.5	REL402950	304.17 x 5.33
300.0	312.2	9.5	REL403000	304.17 x 5.33
310.0	322.2	9.5	REL403100	312.87 x 5.33
320.0	**332.2**	**9.5**	**REL403200**	**329.57 x 5.33**
330.0	342.2	9.5	REL403300	332.87 x 5.33
340.0	352.2	9.5	REL403400	354.97 x 5.33
350.0	362.2	9.5	REL403500	354.97 x 5.33
360.0	**372.2**	**9.5**	**REL403600**	**365.00 x 5.30**
370.0	382.2	9.5	REL403700	380.37 x 5.33
380.0	392.2	9.5	REL403800	382.87 x 5.33
390.0	402.2	9.5	REL403900	405.26 x 5.33

Rod d_N f8/h9	Groove Dia. D_1 H9	Groove Width L_1 +0.2	TSS Part No.	O-Ring Sizes
400.0	412.2	9.5	REL404000	405.26 x 5.33
400.0	415.9	12.2	REL504000	405.26 x 7.00
410.0	422.2	9.5	REL404100	412.87 x 5.33
420.0	432.2	9.5	REL404200	430.66 x 5.33
420.0	435.9	12.2	REL504200	430.66 x 7.00
430.0	442.2	9.5	REL404300	432.87 x 5.33
440.0	452.2	9.5	REL404400	456.06 x 5.33
450.0	462.2	9.5	REL404500	456.06 x 5.33
450.0	465.9	12.2	REL504500	456.06 x 7.00
460.0	472.2	9.5	REL404600	481.38 x 5.33
470.0	482.2	9.5	REL404700	481.38 x 5.33
480.0	492.2	9.5	REL404800	482.87 x 5.33
480.0	495.9	12.2	REL504800	494.16 x 7.00
490.0	502.2	9.5	REL404900	506.78 x 5.33
500.0	512.2	9.5	REL405000	506.78 x 5.33
500.0	515.9	12.2	REL505000	506.86 x 7.00
510.0	522.2	9.5	REL405100	532.18 x 5.33
520.0	532.2	9.5	REL405200	532.18 x 5.33
520.0	535.9	12.2	REL505200	532.26 x 7.00
530.0	542.2	9.5	REL405300	532.87 x 5.33
540.0	552.2	9.5	REL405400	557.58 x 5.33
550.0	562.2	9.5	REL405500	557.58 x 5.33
550.0	565.9	12.2	REL505500	557.66 x 7.00
560.0	572.2	9.5	REL405600	582.68 x 5.33
570.0	582.2	9.5	REL405700	582.68 x 5.33
580.0	592.2	9.5	REL405800	582.68 x 5.33
580.0	595.9	12.2	REL505800	608.08 x 7.00
590.0	602.2	9.5	REL405900	608.08 x 5.33
600.0	612.2	9.5	REL406000	608.08 x 5.33
600.0	615.9	12.2	REL506000	608.08 x 7.00
610.0	622.2	9.5	REL406100	633.48 x 5.33
620.0	632.2	9.5	REL406200	633.48 x 5.33
620.0	635.9	12.2	REL506200	633.48 x 7.00
630.0	642.2	9.5	REL406300	633.48 x 5.33
640.0	652.2	9.5	REL406400	658.88 x 5.33
650.0	665.9	12.2	REL506500	658.88 x 7.00

Rod	Groove Dia.	Groove Width	TSS Part No.	O-Ring Sizes
d_N f8/h9	D_1 H9	L_1 +0.2		
650.0	669.0	15.0	REL606500	654 x 8.40
660.0	675.9	12.2	REL506600	664 x 7.00
660.0	679.0	15.0	REL606600	664 x 8.40
680.0	695.9	12.2	REL506800	684 x 7.00
680.0	699.0	15.0	REL606800	684 x 8.40
700.0	715.9	12.2	REL507000	704 x 7.00
700.0	719.0	15.0	REL607000	704 x 8.40
710.0	725.9	12.2	REL507100	714 x 7.00
710.0	729.0	15.0	REL607100	714 x 8.40
730.0	745.9	12.2	REL507300	734 x 7.00
730.0	749.0	15.0	REL607300	734 x 8.40
760.0	775.9	12.2	REL507600	764 x 7.00
760.0	779.0	15.0	REL607600	764 x 8.40
780.0	795.9	12.2	REL507800	784 x 7.00
780.0	799.0	15.0	REL607800	784 x 8.40
790.0	805.9	12.2	REL507900	794 x 7.00
790.0	809.0	15.0	REL607900	794 x 8.40
800.0	815.9	12.2	REL508000	804 x 7.00
800.0	819.0	15.0	REL608000	804 x 8.40
810.0	825.9	12.2	REL508100	814 x 7.00
810.0	829.0	15.0	REL608100	814 x 8.40
820.0	835.9	12.2	REL508200	824 x 7.00
820.0	839.0	15.0	REL608200	824 x 8.40
830.0	845.9	12.2	REL508300	834 x 7.00
830.0	849.0	15.0	REL608300	834 x 8.40
850.0	865.9	12.2	REL508500	854 x 7.00
850.0	869.0	15.0	REL608500	854 x 8.40
870.0	885.9	12.2	REL508700	874 x 7.00
870.0	889.0	15.0	REL608700	874 x 8.40
880.0	895.9	12.2	REL508800	884 x 7.00
880.0	899.0	15.0	REL608800	884 x 8.40
890.0	905.9	12.2	REL508900	894 x 7.00
890.0	909.0	15.0	REL608900	894 x 8.40
930.0	945.9	12.2	REL509300	934 x 7.00
930.0	949.0	15.0	REL609300	934 x 8.40
1000.0	1019.0	15.0	REL6X1000	1004 x 8.40

Rod	Groove Dia.	Groove Width	TSS Part No.	O-Ring Sizes
d_N f8/h9	D_1 H9	L_1 +0.2		
1050.0	1069.0	15.0	REL6X1050	1054 x 8.40
1100.0	1119.0	15.0	REL6X1100	1104 x 8.40
1200.0	1219.0	15.0	REL6X1200	1204 x 8.40
1500.0	1519.0	15.0	REL6X1500	1504 x 8.40
1600.0	1619.0	15.0	REL6X1600	1604 x 8.40
2000.0	2019.0	15.0	REL6X2000	2004 x 8.40
2600.0	2619.0	15.0	REL6X2600	2604 x 8.40

The rod diameters in **bold** type are in accordance with the recommendations of ISO 3320.
Other dimensions and all intermediate sizes up to 2600 mm diameter including imperial (inch) sizes can be supplied.

Turcon® Glyd Ring®

Double Acting

Rubber Energized Plastic Faced Seal

Material:
Turcon® and Zurcon®

■ Turcon® Glyd Ring®

Description

Successfully used for decades, the Turcon® Glyd Ring® is a very effective and reliable low frictional seal. It is particularly suitable as a rod seal in both high and low pressure systems.

The double acting Turcon® Glyd Ring® is a combination of a Turcon® based slipper seal and an energising O-Ring. It is produced with an interference fit which together with the squeeze of the O-Ring ensures a good sealing effect even at low pressure. At higher system pressures, the O-Ring is energised by the fluid, pushing the Turcon® Glyd Ring® against the sealing face with increased force.

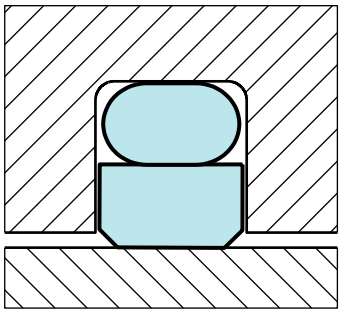

Figure 65 Turcon® Glyd Ring®

The geometry of the Turcon® Glyd Ring® ensures a good static sealing and allows the lubricating hydrodynamic oil film to be build under the seal in reciprocating applications.

Notches

To assure that a rapid energising of the seal takes place at sudden changes of pressure and direction of motion, the seal can be delivered with radial "notches" on both sides.

Ordering of Glyd Ring® with "notches" see page 183.

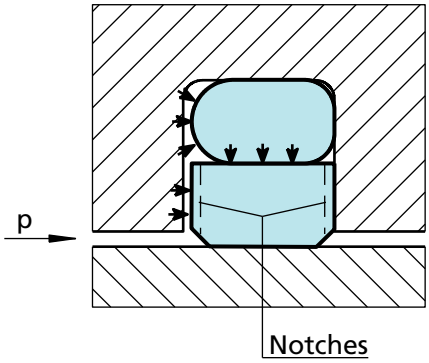

Figure 66 Turcon® Glyd Ring®

Advantages

- No stick-slip effect when starting for smooth operation
- Minimum static and dynamic friction coefficient for a minimum energy loss and operating temperature
- Suitable for non lubricating fluids depending on seal material for optimum design flexibility
- High wear resistance ensures long service life
- Installation grooves acc. to ISO 7425/2
- No adhesive effect to the mating surface during long period of inactivity or storage
- Suitable for most hydraulic fluids in relation with most modern hardware materials and surface finish depending on material selected.
- Suitable for new environmentally safe hydraulic fluids
- Available for all rod diameters up to 2,600 mm.

Applications examples

Over several decades the Turcon® Glyd Ring® has been successfully implemented in a lot of applications as double acting Rod seals of hydraulic components such as:

- Injection moulding machines
- Machine tools
- Presses
- Handling machinery
- Valve stems
- Valves for hydraulic & pneumatic circuits.
- Servo equipment
- Hydraulic motors
- Brake booster
- Jacks.

Technical Data

Operating conditions:

The Turcon® Glyd Ring® is recommended for reciprocating (with a length of stroke at least twice the groove width) and helical movements.

Pressure:	Up to 60 MPa
Speed:	Up to 15 m/s
Frequency:	Up to 5 Hz.
Temperature:	-45 °C to +200 °C (depending on O-Ring Material)
Media:	Mineral oil based hydraulic fluids, barely flammable hydraulic fluids, environmentally safe hydraulic fluids (biological degradable oils), phosphate ester, water, air and others. Depending on the O-Ring material compatibility.
Clearance:	the maximum permissible radial clearance Smax is shown in the Table XLIII, as a function of the operating pressure and functional diameter.

Important Note:
The above data are maximum values and cannot be used at the same time. e.g. the maximum operating speed depends on material type, pressure, temperature and gap value.
Temperature range also dependent on medium.

Materials

The following material combinations have proven effective for hydraulic applications:

All round material for hydraulic applications with reciprocating, short stroke or helical movements in mineral oils, flame retardant hydraulic fluids HFC, phosphate ester, bio-oils or fluids having less satisfactory lubricating properties:

Turcon® Glyd Ring®:	Turcon® M12	
O-Ring:	NBR, 70 Shore A	N
	FKM, 70 Shore A	V
Set code:	M12N or M12V	

For medium to heavy applications with reciprocating movements in mineral oils and other media with good lubrication:

Turcon® Glyd Ring®:	Turcon® T46	
O-Ring:	NBR, 70 Shore A	N
	FKM, 70 Shore A	V
Set code:	T46N or T46V	

For specific applications, all Turcon® materials are available.

Other viable material combinations are listed in Table XLII.

Table XLII Turcon® and Zurcon® Materials for Glyd Ring®

Material, Applications, Properties	Code	O-Ring Material Shore A	Code	O-Ring Operating Temp.* °C	Mating Surface Material	MPa max. Dyna-mic
Turcon® M12 First material choice for seals in linear motion Overall improved properties For new constructions and updating For all commonly applied hydraulic fluids including fluids with low lubrication performance Lowest friction and best sliding properties Lowest wear on seals Improved absorption of abrasive contaminanants No wear or abrasion of counte surface Mineral fibre and Additives filled Colour: Dark grey	M12	NBR- 70	N	-30 to +100	Steel Steel hardened Steel chrome plated (rod) Steel plated (rod) Cast iron Stainless steel Titanium	50
		NBR- 70 Low temp.	T	-45 to +80		
		FKM- 70	V	-10 to +200		
Turcon® T05 For lubricating fluids Also for gas service Very low friction Very good sliding and sealing properties Colour: Turquoise	T05	NBR- 70	N	-30 to +100	Steel, hardened Steel chrome plated (rod)	20
		NBR- 70 Low temp.	T	-45 to +80		
		FKM- 70	V	-10 to +200		
Turcon® T08 For lubricating fluids and linear motion Very high compressive strength and good extrusion resistance Hard counter surfaces is recommended Bronze filled Colour: Light to dark brown which may have variations in shading	T08	NBR- 70	N	-30 to +100	Steel, hardened Steel chrome plated (rod) Cast iron	60
		NBR- 70 Low temp.	T	-45 to +80		
		FKM- 70	V	-10 to +200		
Turcon® T10 For hydraulic and pneumatic For lubricating and non-lubricating fluids High extrusion resistance Good chemical resistance Not for electrically conducting fluids BAM tested. Carbon, graphite filled Colour: Black	T10	NBR- 70	N	-30 to +100	Steel Steel hardened Steel chrome plated (rod) Stainless steel	40
		NBR- 70 Low temp.	T	-45 to +80		
		FKM- 70	V	-10 to +200		
		EPDM- 70	E**	-45 to +145		
Turcon® T29 For all lubricating and non-lubricating fluids Good extrusion resistance Surface texture is not suitable for gas sealing Not for electrically conducting fluids Carbon fibre filled Colour: Grey	T29	NBR- 70	N	-30 to +100	Steel Steel hardened Steel chrome plated (rod) Cast iron Stainless steel	30
		NBR- 70 Low temp.	T	-45 to +80		
		FKM- 70	V	-10 to +200		
		EPDM- 70	E**	-45 to +145		
Turcon® T40 For all lubricating and non-lubricating fluids **Water hydraulics** Surface texture not suitable for gas sealing Carbon fibre filled Colour: Grey	T40	NBR- 70	N	-30 to +100	Steel Steel hardened Steel chrome plated (rod) Cast iron Stainless steel Aluminium	25
		NBR- 70 Low temp.	T	-45 to +80		
		FKM- 70	V	-10 to +200		
		EPDM- 70	E**	-45 to +145		
Turcon® T46 For lubricated hydraulics in linear motion High compressive strength High extrusion resistance Very good sliding and wear properties BAM tested Bronze filled Colour: Light to dark brown, which may have variations in shading	T46	NBR- 70	N	-30 to +100	Steel hardened Steel chrome plated (rod) Cast iron	50
		NBR- 70 Low temp	T	-45 to +80		
		FKM- 70	V	-10 to +200		

Material, Applications, Properties	Code	O-Ring Material Shore A	Code	O-Ring Operating Temp.* °C	Mating Surface Material	MPa max. Dyna-mic
Zurcon® Z51* ** For mineral oil based fluids Very **high abrasion and extrusion resistance** For counter surface with rougher surface finish Limited chemical resistance. Max. working termperature 110 °C Cast polyurethane Colour: Yellow to light-brown	Z51	NBR- 70	N	-30 to +100	Steel Steel hardened Steel chrome plated (rod) Cast iron Ceramic coating Stainless steel	60
		NBR- 70 Low temp.	T	-45 to +80		
Zurcon® Z80 For lubricating and non-lubricating fluids Water based fluids, air and gases Dry air pneumatics High abrasion and extrusion resistance For service in abrasive conditions and media with particles Good chemical resistance Limited temperature capability (-60 to +80 °C) UHMWPE (Ultra High Molecular Weight Polyethylene) Colour: White to off-white	Z80	NBR -70	N	-30 to (+100)	Steel Steel hardened Steel, chromeplated Stainless steel Aluminium Ceramic coating	35
		NBR- 70 Low temp.	T	-45 to +80		
		EPDM- 70	E**	-45 to (+145)		

* The O-Ring Operation Temperature is only valid in mineral hydraulic oil. BAM: Tested by "Bundesanstalt Materialprüfung, Germany".
Highlighted materials are standard. ** Material not suitable for mineral oils. *** max. Ø 2200 mm

■ Installation Recommendation

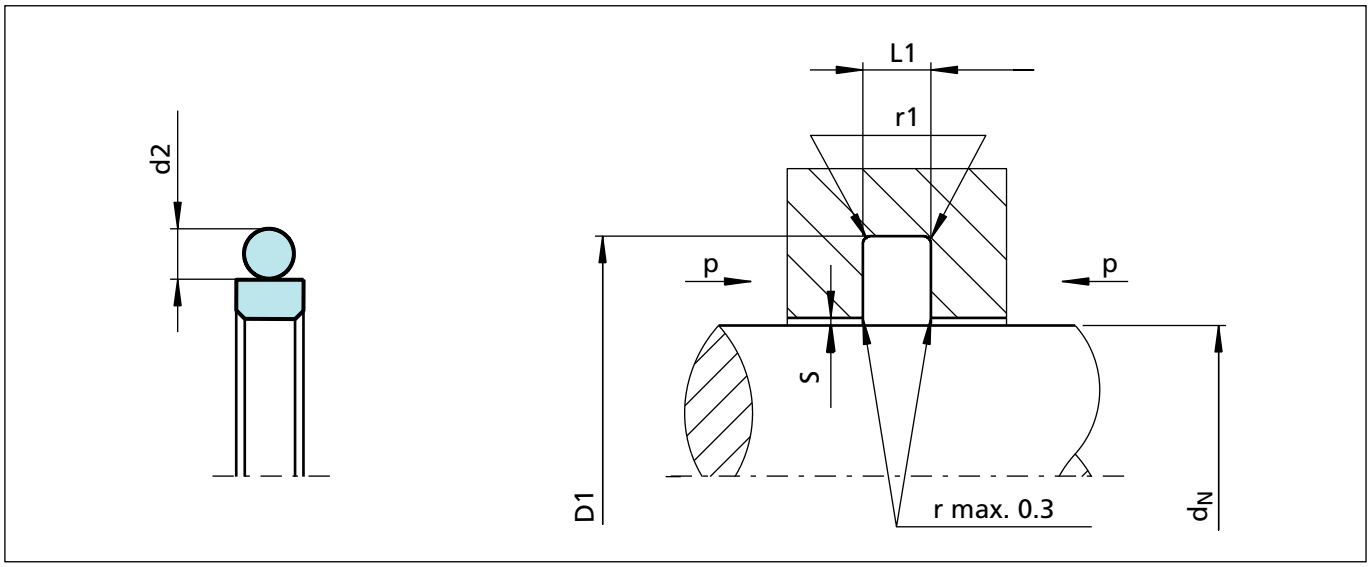

Figure 67 Installation drawing

Table XLIII Installation dimensions – Standard recommendations

Rod Diameter d_N f8/h9			Groove Diameter*	Groove Width	Radius	Radial Clearance S max. **			O-Ring Cross-Section
Series No. RG 43	**Series No. RG 45**	**Series No. RG 41**							
Standard Application	**Light Application**	**Heavy Duty Application**	**D1** H9	**L1** +0.2	**r1**	**10 MPa**	**20 MPa**	**40 MPa**	**d_2**
3 - 7.9	8 - 18.9	-	d_N + 4.9	2.2	0.4	0.30	0.20	0.15	1.78
8 - 18.9	19 - 37.9	-	d_N + 7.3	3.2	0.6	0.40	0.25	0.15	2.62
19 - 37.9	38 - 199.9	8 - 18.9	d_N + 10.7	4.2	1.0	0.40	0.25	0.20	3.53
38 - 199.9	200 - 255.9	19 - 37.9	d_N + 15.1	6.3	1.3	0.50	0.30	0.20	5.33
200 - 255.9	256 - 649.9	38 - 199.9	d_N + 20.5	8.1	1.8	0.60	0.35	0.25	7.00
256 - 649.9	650 - 999.9	200 - 255.9	d_N + 24.0	8.1	1.8	0.60	0.35	0.25	7.00
650 - 999.9	≥ 1000	256 - 649.9	d_N + 27.3	9.5	2.5	0.70	0.50	0.30	8.40
≥ 1000***	-	650 - 999.9	d_N + 38.0	13.8	3.0	1.00	0.70	0.60	12.00

* Installation with groove dimensions to ISO 7425/2 is also recommendable.
** At pressures > **40 MPa** use diameter tolerance H8/f8 (bore/rod) in area of the seal or consult TSS for alternative material or profiles TSS Slydring®/Wear Rings are not applicable at very small radial clearance; consult the Slydring® catalog.
*** O-Rings with 12 mm cross section are delivered as special profilring.

Ordering example

Turcon® Glyd Ring®, complete with O-Ring, standard application, Series RG43 (from Table XLIII).

Rod diameter: d_N = 80.0 mm
TSS Part No.: RG4300800 (from Table XLIV)

Select the material from Table XLII. The corresponding code numbers are appended to the TSS Part No. (from Table XLIV).
Together these form the TSS Article Number. The TSS Article Number for all intermediate sizes not shown in Table XLIV can be determined following the example below.

**** For diameters $d_N \geq$ 1000.0 mm multiply only by factor 1.
Example: RG43 for diamater d_N 1200.0 mm.
TSS Article No.: RG43**X1200** - M12N

TSS Article No. RG43 0 0800 - M12 N

- TSS Series No. (RG43)
- Type (Standard)***** (0)
- Rod diameter x 10**** (0800)
- Quality Index (Standard) (-)
- Material code (Seal ring) (M12)
- Material code (O-Ring) (N)

***** Ordering Glyd Ring® with radial notches, please use suffix "N" in the fifth character, for diameter d_N <1000 mm.

Table XLIV Installation dimensions / TSS Part No.

Rod Diameter	Groove Diameter	Groove Width	TSS Part No.	O-Ring Size
d_N f8/h9	D_1 H9	L_1 +0.2		
3.0	7.9	2.2	RG4300030	4.47 x 1.78
4.0	**8.9**	**2.2**	**RG4300040**	**5.6 x 1.8**
5.0	**9.9**	**2.2**	**RG4300050**	**6.7 x 1.8**
6.0	**10.9**	**2.2**	**RG4300060**	**7.65 x 1.78**
7.0	11.9	2.2	RG4300070	8.75 x 1.8
8.0	**12.9**	**2.2**	**RG4500080**	**9.5 x 1.8**
8.0	**15.3**	**3.2**	**RG4300080**	**10.77 x 2.62**
10.0	**14.9**	**2.2**	**RG4500100**	**11.8 x 1.8**
10.0	**17.3**	**3.2**	**RG4300100**	**12.37 x 2.62**
12.0	**16.9**	**2.2**	**RG4500120**	**14.0 x 1.78**
12.0	**19.3**	**3.2**	**RG4300120**	**13.94 x 2.62**
14.0	**18.9**	**2.2**	**RG4500140**	**15.6 x 1.78**
14.0	**21.3**	**3.2**	**RG4300140**	**17.12 x 2.62**
15.0	19.9	2.2	RG4500150	17.17 x 1.78
15.0	22.3	3.2	RG4300150	17.12 x 2.62
16.0	20.9	2.2	RG4500160	17.17 x 1.78
16.0	**23.3**	**3.2**	**RG4300160**	**18.72 x 2.62**
18.0	22.9	2.2	RG4500180	20.35 x 1.78

The rod diameters in **bold** type are in accordance with the recommendations of ISO 3320.
Other dimensions and all intermediate sizes up to 2.600 mm diameter including imperial (inch) sizes can be supplied.
All O-Rings with 12 mm cross section are delivered as special profilring.

Rod Diameter	Groove Diameter	Groove Width	TSS Part No.	O-Ring Size
d_N f8/h9	D_1 H9	L_1 +0.2		
18.0	**25.3**	**3.2**	**RG4300180**	**20.29 x 2.62**
19.0	29.7	4.2	RG4300190	23.39 x 3.53
20.0	**27.3**	**3.2**	**RG4500200**	**21.89 x 2.62**
20.0	**30.7**	**4.2**	**RG4300200**	**23.39 x 3.53**
22.0	**29.3**	**3.2**	**RG4500220**	**25.07 x 2.62**
22.0	**32.7**	**4.2**	**RG4300220**	**26.57 x 3.53**
24.0	31.3	3.2	RG4500240	26.64 x 2.62
25.0	**32.3**	**3.2**	**RG4500250**	**28.24 x 2.62**
25.0	**35.7**	**4.2**	**RG4300250**	**29.74 x 3.53**
25.4	32.7	3.2	RG4500254	28.24 x 2.62
25.4	36.1	4.2	RG4300254	29.74 x 3.53
26.0	33.3	3.2	RG4500260	28.24 x 2.62
26.0	36.7	4.2	RG4300260	29.74 x 3.53
27.0	34.3	3.2	RG4500270	29.82 x 2.62
28.0	35.3	3.2	RG4500280	29.82 x 2.62
28.0	**38.7**	**4.2**	**RG4300280**	**32.92 x 3.53**
28.575	35.875	3.2	RG4500286	31.42 x 2.62
29.0	36.3	3.2	RG4500290	31.42 x 2.62
30.0	37.3	3.2	RG4500300	32.99 x 2.62
30.0	40.7	4.2	RG4300300	34.52 x 3.53
32.0	39.3	3.2	RG4500320	34.59 x 2.62
32.0	**42.7**	**4.2**	**RG4300320**	**36.09 x 3.53**
35.0	42.3	3.2	RG4500350	37.77 x 2.62
35.0	45.7	4.2	RG4300350	37.69 x 3.53
36.0	43.3	3.2	RG4500360	39.34 x 2.62
36.0	**46.7**	**4.2**	**RG4300360**	**40.87 x 3.53**
38.0	48.7	4.2	RG4500380	40.87 x 3.53
38.0	53.1	6.3	RG4300380	43.82 x 5.33
39.0	49.7	4.2	RG4500390	44.04 x 3.53
40.0	**50.7**	**4.2**	**RG4500400**	**44.04 x 3.53**
40.0	**55.1**	**6.3**	**RG4300400**	**43.82 x 5.33**
42.0	52.7	4.2	RG4500420	47.22 x 3.53
42.0	57.1	6.3	RG4300420	46.99 x 5.33
44.0	54.7	4.2	RG4500440	47.22 x 3.53
44.45	59.55	6.3	RG4300444	50.17 x 5.33
45.0	**55.7**	**4.2**	**RG4500450**	**50.39 x 3.53**

The rod diameters in **bold** type are in accordance with the recommendations of ISO 3320.
Other dimensions and all intermediate sizes up to 2.600 mm diameter including imperial (inch) sizes can be supplied.
All O-Rings with 12 mm cross section are delivered as special profilring.

Rod Diameter	Groove Diameter	Groove Width	TSS Part No.	O-Ring Size
d_N f8/h9	D_1 H9	L_1 +0.2		
45.0	**60.1**	**6.3**	**RG4300450**	**50.17 x 5.33**
48.0	58.7	4.2	RG4500480	51.5 x 3.55
48.0	63.1	6.3	RG4300480	53.34 x 5.33
50.0	**60.7**	**4.2**	**RG4500500**	**53.57 x 3.53**
50.0	**65.1**	**6.3**	**RG4300500**	**56.52 x 5.33**
50.8	61.5	4.2	RG4500508	53.57 x 3.53
50.8	65.9	6.3	RG4300508	56.52 x 5.33
52.0	62.7	4.2	RG4500520	56.74 x 3.53
52.0	67.1	6.3	RG4300520	56.52 x 5.33
54.0	69.1	6.3	RG4300540	59.69 x 5.33
55.0	65.7	4.2	RG4500550	59.92 x 3.53
55.0	70.1	6.3	RG4300550	59.69 x 5.33
56.0	**66.7**	**4.2**	**RG4500560**	**59.92 x 3.53**
56.0	**71.1**	**6.3**	**RG4300560**	**62.87 x 5.33**
58.0	73.1	6.3	RG4300580	62.87 x 5.33
60.0	70.7	4.2	RG4500600	63.09 x 3.53
60.0	75.1	6.3	RG4300600	66.04 x 5.33
63.0	73.7	4.2	RG4500630	66.27 x 3.53
63.0	**78.1**	**6.3**	**RG4300630**	**69.22 x 5.33**
65.0	80.1	6.3	RG4300650	69.22 x 5.33
67.0	77.7	4.2	RG4500670	72.62 x 3.53
70.0	80.7	4.2	RG4500700	75.79 x 3.53
70.0	**85.1**	**6.3**	**RG4300700**	**75.57 x 5.33**
72.0	82.7	4.2	RG4500720	75.79 x 3.53
75.0	85.7	4.2	RG4500750	78.97 x 3.53
75.0	90.1	6.3	RG4300750	81.92 x 5.33
80.0	90.7	4.2	RG4500800	85.32 x 3.53
80.0	**95.1**	**6.3**	**RG4300800**	**85.09 x 5.33**
83.0	93.7	4.2	RG4500830	88.49 x 3.53
85.0	100.1	6.3	RG4300850	91.44 x 5.33
86.0	96.7	4.2	RG4500860	91.67 x 3.53
90.0	100.7	4.2	RG4500900	94.84 x 3.53
90.0	**105.1**	**6.3**	**RG4300900**	**94.62 x 5.33**
92.0	102.7	4.2	RG4500920	98.02 x 3.53
95.0	105.7	4.2	RG4500950	101.19 x 3.53
95.0	110.1	6.3	RG4300950	100.97 x 5.33

The rod diameters in **bold** type are in accordance with the recommendations of ISO 3320.
Other dimensions and all intermediate sizes up to 2.600 mm diameter including imperial (inch) sizes can be supplied.
All O-Rings with 12 mm cross section are delivered as special profilring.

Rod Diameter	Groove Diameter	Groove Width	TSS Part No.	O-Ring Size
d_N f8/h9	D_1 H9	L_1 +0.2		
100.0	110.7	4.2	RG4501000	104.37 x 3.53
100.0	**115.1**	**6.3**	**RG4301000**	**107.32 x 5.33**
101.6	112.3	4.2	RG4501016	107.54 x 3.53
101.6	116.7	6.3	RG4301016	107.32 x 5.33
104.7	119.8	6.3	RG4301047	110.49 x 5.33
105.0	115.7	4.2	RG4501050	110.72 x 3.53
105.0	120.1	6.3	RG4301050	110.49 x 5.33
110.0	120.7	4.2	RG4501100	113.89 x 3.53
110.0	**125.1**	**6.3**	**RG4301100**	**116.84 x 5.33**
110.0	130.5	8.1	RG4101100	120.02 x 7.00
112.0	127.1	6.3	RG4301120	116.84 x 5.33
115.0	125.7	4.2	RG4501150	120.24 x 3.53
115.0	130.1	6.3	RG4301150	120.02 x 5.33
118.0	133.1	6.3	RG4301180	123.19 x 5.33
120.0	130.7	4.2	RG4501200	123.42 x 3.53
120.0	135.1	6.3	RG4301200	126.37 x 5.33
125.0	135.7	4.2	RG4501250	129.77 x 3.53
125.0	**140.1**	**6.3**	**RG4301250**	129.**54** x 5.33
129.0	139.7	4.2	RG4501290	132.94 x 3.53
130.0	140.7	4.2	RG4501300	136.12 x 3.53
130.0	145.1	6.3	RG4301300	135.89 x 5.33
135.0	145.7	4.2	RG4501350	139.29 x 3.53
135.0	150.1	6.3	RG4301350	142.24 x 5.33
140.0	150.7	4.2	RG4501400	145.64 x 3.53
140.0	**155.1**	**6.3**	**RG4301400**	**145.42 x 5.33**
145.0	155.7	4.2	RG4501450	148.82 x 3.53
145.0	160.1	6.3	RG4301450	151.77 x 5.33
150.0	165.1	6.3	RG4301500	158.12 x 5.33
160.0	**175.1**	**6.3**	**RG4301600**	**164.47 x 5.33**
160.0	**180.5**	**8.1**	**RG4101600**	**170.82 x 7.00**
165.0	180.1	6.3	RG4301650	170.82 x 5.33
170.0	180.7	4.2	RG4501700	177.39 x 3.53
170.0	185.1	6.3	RG4301700	177.17 x 5.33
175.0	190.1	6.3	RG4301750	183.52 x 5.33
180.0	190.7	4.2	RG4501800	183.74 x 3.53
180.0	**195.1**	**6.3**	**RG4301800**	**183.52 x 5.33**

The rod diameters in **bold** type are in accordance with the recommendations of ISO 3320.
Other dimensions and all intermediate sizes up to 2.600 mm diameter including imperial (inch) sizes can be supplied.
All O-Rings with 12 mm cross section are delivered as special profilring.

Rod Diameter	Groove Diameter	Groove Width	TSS Part No.	O-Ring Size
d_N f8/h9	D_1 H9	L_1 +0.2		
180.0	**200.5**	**8.1**	**RG4101800**	**189.87 x 7.00**
190.0	200.7	4.2	RG4501900	196.44 x 3.53
190.0	205.1	6.3	RG4301900	196.22 x 5.33
200.0	215.1	6.3	RG4502000	208.92 x 5.33
200.0	**220.5**	**8.1**	**RG4302000**	**208.92 x 7.00**
205.0	220.1	6.3	RG4502050	208.92 x 5.33
210.0	225.1	6.3	RG4502100	215.27 x 5.33
220.0	235.1	6.3	RG4502200	227.97 x 5.33
220.0	**240.5**	**8.1**	**RG4302200**	**227.97 x 7.00**
230.0	245.1	6.3	RG4502300	234.32 x 5.33
230.0	250.5	8.1	RG4302300	240.67 x 7.00
240.0	255.1	6.3	RG4502400	247.02 x 5.33
240.0	260.5	8.1	RG4302400	253.37 x 7.00
250.0	**270.5**	**8.1**	**RG4302500**	**266.07 x 7.00**
260.0	284.0	8.1	RG4302600	266.07 x 7.00
270.0	290.5	8.1	RG4502700	278.77 x 7.00
270.0	294.0	8.1	RG4302700	278.77 x 7.00
275.0	299.0	8.1	RG4302750	291.47 x 7.00
280.0	300.5	8.1	RG4502800	291.47 x 7.00
280.0	**304.0**	**8.1**	**RG4302800**	**291.47 x 7.00**
290.0	310.5	8.1	RG4502900	304.17 x 7.00
290.0	314.0	8.1	RG4302900	304.17 x 7.00
300.0	324.0	8.1	RG4303000	316.87 x 7.00
310.0	330.5	8.1	RG4503100	316.87 x 7.00
310.0	334.0	8.1	RG4303100	316.87 x 7.00
320.0	**344.0**	**8.1**	**RG4303200**	**329.57 x 7.00**
330.0	354.0	8.1	RG4303300	342.27 x 7.00
340.0	364.0	8.1	RG4303400	354.97 x 7.00
350.0	370.5	8.1	RG4503500	354.97 x 7.00
350.0	374.0	8.1	RG4303500	367.67 x 7.00
360.0	**384.0**	**8.1**	**RG4303600**	**367.67 x 7.00**
370.0	390.5	8.1	RG4503700	380.37 x 7.00
370.0	394.0	8.1	RG4303700	380.37 x 7.00
380.0	404.0	8.1	RG4303800	393.07 x 7.00
390.0	414.0	8.1	RG4303900	405.26 x 7.00
400.0	420.5	8.1	RG4504000	417.96 x 7.00

The rod diameters in **bold** type are in accordance with the recommendations of ISO 3320.
Other dimensions and all intermediate sizes up to 2.600 mm diameter including imperial (inch) sizes can be supplied.
All O-Rings with 12 mm cross section are delivered as special profilring.

Rod Diameter	Groove Diameter	Groove Width	TSS Part No.	O-Ring Size
d_N f8/h9	D_1 H9	L_1 +0.2		
400.0	424.0	8.1	RG4304000	417.96 x 7.00
410.0	434.0	8.1	RG4304100	417.96 x 7.00
420.0	444.0	8.1	RG4304200	430.66 x 7.00
430.0	454.0	8.1	RG4304300	443.36 x 7.00
440.0	464.0	8.1	RG4304400	456.06 x 7.00
450.0	474.0	8.1	RG4304500	468.76 x 7.00
460.0	484.0	8.1	RG4304600	468.76 x 7.00
470.0	494.0	8.1	RG4304700	481.46 x 7.00
480.0	504.0	8.1	RG4304800	494.16 x 7.00
490.0	514.0	8.1	RG4304900	506.86 x 7.00
500.0	524.0	8.1	RG4305000	506.86 x 7.00
510.0	534.0	8.1	RG4305100	532.26 x 7.00
520.0	544.0	8.1	RG4305200	532.26 x 7.00
530.0	554.0	8.1	RG4305300	557.66 x 7.00
540.0	564.0	8.1	RG4305400	557.66 x 7.00
550.0	574.0	8.1	RG4305500	557.66 x 7.00
560.0	584.0	8.1	RG4305600	582.68 x 7.00
570.0	594.0	8.1	RG4305700	582.68 x 7.00
580.0	604.0	8.1	RG4305800	608.08 x 7.00
590.0	614.0	8.1	RG4305900	608.08 x 7.00
600.0	624.0	8.1	RG4306000	608.08 x 7.00
610.0	634.0	8.1	RG4306100	633.48 x 7.00
620.0	644.0	8.1	RG4306200	633.48 x 7.00
630.0	654.0	8.1	RG4306300	658.88 x 7.00
640.0	664.0	8.1	RG4306400	658.88 x 7.00
650.0	677.3	9.5	RG4306500	663 x 8.4
660.0	687.3	9.5	RG4306600	673 x 8.4
670.0	697.3	9.5	RG4306700	683 x 8.4
680.0	707.3	9.5	RG4306800	693 x 8.4
688.0	715.3	9.5	RG4306880	701 x 8.4
690.0	717.3	9.5	RG4306900	703 x 8.4
700.0	724.0	8.1	RG4507000	712 x 7.0
710.0	737.3	9.5	RG4307100	723 x 8.4
740.0	767.3	9.5	RG4307400	753 x 8.4
760.0	784.0	8.1	RG4507600	772 x 7.00
770.0	797.3	9.5	RG4307700	783 x 8.4

The rod diameters in **bold** type are in accordance with the recommendations of ISO 3320.
Other dimensions and all intermediate sizes up to 2.600 mm diameter including imperial (inch) sizes can be supplied.
All O-Rings with 12 mm cross section are delivered as special profilring.

Rod Diameter	Groove Diameter	Groove Width	TSS Part No.	O-Ring Size
d_N f8/h9	D_1 H9	L_1 +0.2		
800.0	827.3	9.5	RG4308000	813 x 8.4
850.0	877.3	9.5	RG4308500	863 x 8.4
870.0	897.3	9.5	RG4308700	883 x 8.4
900.0	927.3	9.5	RG4309000	913 x 8.4
910.0	937.3	9.5	RG4309100	923 x 8.4
950.0	977.3	9.5	RG4309500	963 x 8.4
960.0	987.3	9.5	RG4309600	973 x 8.4
1000.0	1027.3	9.5	RG45X1000	1013 x 8.4
1000.0	1038.0	13.8	RG43X1000	1016 x 12
1050.0	1077.3	9.5	RG45X1050	1063 x 8.4
1050.0	1088.0	13.8	RG43X1050	1066 x 12
1100.0	1138.0	13.8	RG43X1100	1116 x 12
1160.0	1187.3	9.5	RG45X1160	1173 x 8.4
1200.0	1227.3	9.5	RG45X1200	1213 x 8.4
1200.0	1238.0	13.8	RG43X1200	1216 x 12
1300.0	1327.3	9.5	RG45X1300	1313 x 8.4
1300.0	1338.0	13.8	RG43X1300	1316 x 12
1500.0	1527.3	9.5	RG45X1500	1513 x 8.4
1500.0	1538.0	13.8	RG43X1500	1516 x 12
1600.0	1638.0	13.8	RG43X1600	1616 x 12
2000.0	2038.0	13.8	RG43X2000	2016 x 12
2600.0	2638.0	13.8	RG43X2600	2616 x 12

The rod diameters in **bold** type are in accordance with the recommendations of ISO 3320.
Other dimensions and all intermediate sizes up to 2.600 mm diameter including imperial (inch) sizes can be supplied.
All O-Rings with 12 mm cross section are delivered as special profilring.

Turcon® Glyd Ring T®

Double Acting

Rubber Energized Plastic Faced Seal

Material:
Turcon® and Zurcon®

■ Turcon® Glyd Ring® T

Description

Turcon® Glyd Ring® T is a further technical development of the Turcon® Glyd Ring® seal which has been successfully used for decades. It is fully interchangeable with the earlier Glyd Ring® seals in all new applications. Glyd Ring® T meets all the market demands for a function-specific seal solution, observing economic and ecological aspects.

The benefits of the patented seal concept are provided by the innovative functional principle of the trapezoidal profile cross-section.

* Patent-No.:

DE	41 40833 C3
EP	0 582 593
Japan	2 799 367
USA	5,433,452

Both lateral profile flanks are inclined so that the seal profile tapers towards the seal surface. The profile can thus retain the robust and compact form typical of piston seals without losing any of the flexibility required to achieve a pressure-related maximum compression (Figure 68).

The edge angle created by the special Glyd Ring® T cross-sectional form permits an additional degree of freedom and enables a slight tilting movement of the seal. The maximum compression is thus always shifted towards the area of the seal edge directly exposed to the pressure. On the low-pressure edge of the seal, on the other hand, the Glyd Ring® T exhibits only zones with neutral strains without compressive or shearing loads, thus effectively reducing the danger of gap extrusion. The resulting benefits for the user can be seen in the following list.

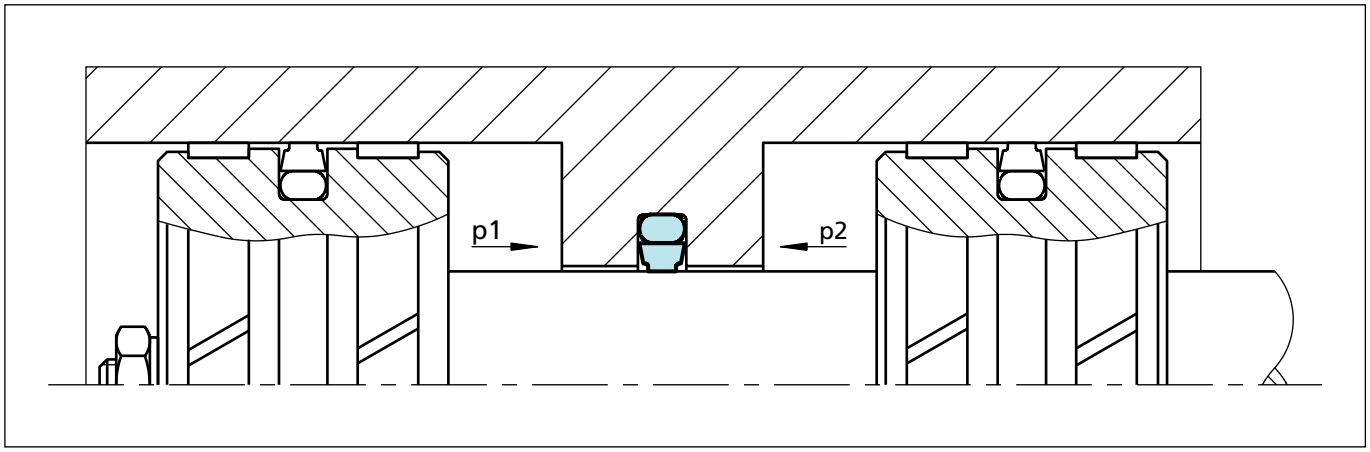

Figure 68 Turcon® Glyd Ring® T

Advantages

The benefits offered to date by Glyd Ring® are still retained in full, and are now complemented by a number of further important advantages:

- Very good static leak-tightness
- Increased clearance possible (approx. +50%), depending on the operating conditions
- Low friction, no stick-slip effect
- Simple groove design
- Installation grooves also to ISO 7425/2
- Available for all rod diameters up to 2,600 mm.

Application Examples

Turcon® Glyd Ring® T is the recommended sealing element for double acting inside sealing seal for hydraulic components such as:

- Injection moulding machines
- Machine tools
- Presses
- Handling machinery
- Servo equipment
- Agriculture
- Valves.

It is particularly recommended for heavy duty and large diameter applications.

Technical Data

Operating pressure:	Up to 60 MPa
Speed:	Up to 15 m/s
Temperature:	-45 °C to +200 °C (depending on O-Ring material)
Media:	Mineral oil-based hydraulic fluids, flame retardant hydraulic fluids, environmentally safe hydraulic fluids (bio-oils), phosphate ester, water, air and others, depending on the O-Ring material compatibility (see Table XLVI)
Clearance:	The maximum permissible radial clearance S_{max} is shown in Table XLVII as a function of the operating pressure and functional diameter.

Important Note:
The above data are maximum values and cannot be used at the same time. e.g. the maximum operating speed depends on material type, pressure, temperature and gap value.
Temperature range also dependent on medium.

Materials

The following material combinations have proven effective for hydraulic applications:

All round material for hydraulic applications with reciprocating, short stroke or helical movements in mineral oils, flame retardant hydraulic fluids HFC, phosphate ester, bio-oils or fluids having less satisfactory lubricating properties:

Turcon® Glyd Ring® T:	Turcon® M12	
O-Ring:	NBR, 70 Shore A	N
	FKM, 70 Shore A	V
Set code:	M12N or M12V	

For medium to heavy applications with reciprocating movements in mineral oils and other media with good lubrication:

Turcon® Glyd Ring® T:	Turcon® T46	
O-Ring:	NBR, 70 Shore A	N
	FKM, 70 Shore A	V
Set code:	T46N or T46V	

For specific applications, other viable material combinations are listed in Table Table XLVI.

Series

Different cross-section sizes are recommended as a function of the seal diameters.

Table Table XLVII, shows the relationship between the series number according to the seal diameter range and the different application class sizes. These application classes are:

Standard application:	General applications in which no exceptional operating conditions exist.
Light application:	Applications with demands for reduced friction or for smaller grooves.
Heavy-duty application:	For exceptional operating loads such as high pressures, pressure peaks, etc.

Table XLV Available range

Series No.	Rod Diameter d_N f8/h9
RT00	2.0 - 130.0
RT01	4.0 - 240.0
RT02	6.0 - 450.0
RT03	12.0 - 650.0
RT04	38.0 - 650.0
RT08	200.0 - 999.9
RT05	256.0 - 999.9
RT05X	1000.0 - 1200.0
RT06	650.0 - 999.9
RT06X	1000.0 - 2600.0

For the recommended range see Table Table XLVII.

Table XLVI Turcon® and Zurcon® Materials for Glyd Ring® T

Material, Applications, Properties	Code	O–Ring Material Shore A	Code	O-Ring Operating Temp.*°C	Mating Surface Material	MPa max. Dyna-mic
Turcon® M12 First material choice for seals in linear motion Overall improved properties For new constructions and updating For all commonly applied hydraulic fluids including fluids with low lubrication performance Lowest friction and best sliding properties Lowest wear on seals Improved absorption of abrasive contaminants No wear or abrasion of counter surface Colour: Dark grey	M12	NBR- 70	N	-30 to +100	Steel Steel hardened Steel chrome plated (rod) Steel plated (rod) Cast iron Stainless steel Titanium	50
		NBR- 70 Low temp.	T	-45 to +80		
		FKM- 70	V	-10 to +200		
Turcon® T40 For lubricating and non-lubricating fluids **Water hydraulics** Surface texture is not suitable for gas sealing Carbon fibre filled Colour: Grey.	T40	NBR- 70	N	-30 to +100	Steel Steel hardened Steel chrome plated (rod) Cast iron Stainless steel Aluminium	25
		NBR- 70 Low temp.	T	-45 to +80		
		FKM- 70	V	-10 to +200		
		EPDM- 70	E**	-45 to +145		
Turcon® T46 For lubricated hydraulics in linear motion High compressive strength High extrusion resistance Very good sliding and wear properties BAM tested Bronze filled Colour: Light to dark brown, which may have variations in shading.	T46	NBR- 70	N	-30 to +100	Steel hardened Steel chrome plated (rod) Cast iron	50
		NBR- 70 Low temp.	T	-45 to +80		
		FKM- 70	V	-10 to +200		
Zurcon® Z51*** For mineral oil based fluids **Very high abrasion and extrusion resistance** For counter surface with rougher surface finish Hard to install Limited chemical resistance Max. working temperature 110 °C Cast polyurethane Colour: Yellow to light-brown.	Z51	NBR- 70	N	-30 to +100	Steel Steel hardened Steel chrome plated (rod) Cast iron Stainless steel Ceramic coating	60
		NBR- 70 Low temp.	T	-45 to +80		
Zurcon® Z80 For lubricating and non-lubricating fluids Water based fluids, air and gases Dry air pneumatics High abrasion and extrusion resistance For service in abrasive conditions and media with particles Good chemical resistance Limited temperature capability (-60 to +80 °C) UHMWPE (Ultra High Molecular Weight Polyethylene) Colour: White to off-white.	Z80	NBR- 70	N	-30 to (+100)	Steel Steel hardened Steel chrome plated (rod) Stainless steel Aluminium Ceramic coating	35
		NBR- 70 Low temp.	T	-45 to +80		
		EPDM- 70	E**	-45 to(+145)		

* The O-Ring Operation Temperature is only valid in mineral hydraulic oil (except EPDM). ** Material not suitable for mineral oils.
*** Max. ø 2200 BAM: Tested by "Bundesanstalt Materialprüfung, Germany". Highlighted materials are standard.

■ Installation Recommendation

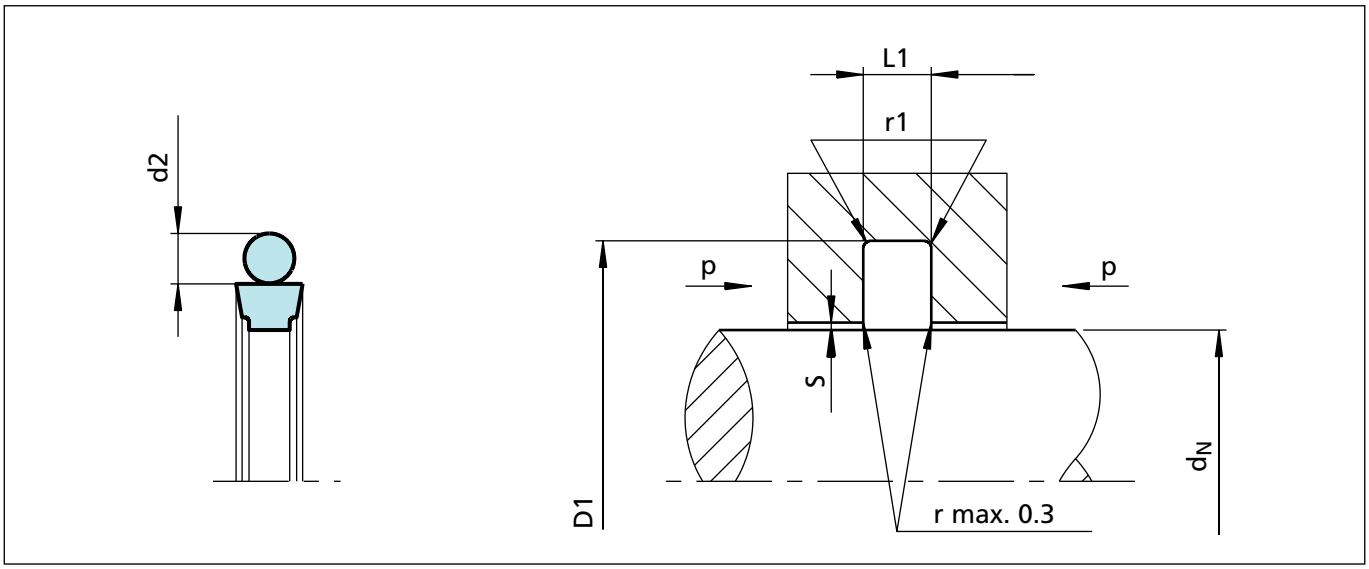

Figure 69 Installation drawing

Table XLVII Installation dimensions – Standard recommendations

Series No.	Rod Diameter d_N f8/h9			Groove Diameter*	Groove Width	Radius	Radial Clearance S max. **			O-Ring Cross-Section
	Standard Application	Light Application	Heavy Duty Application	D_1 H9	L_1 +0.2	r_1	10 MPa	20 MPa	40 MPa	d_2
RT00	3 - 7.9	8 - 18.9	-	d_N + 4.9	2.2	0.4	0.40	0.30	0.20	1.78
RT01	8 - 18.9	19 - 37.9	-	d_N + 7.3	3.2	0.6	0.60	0.50	0.30	2.62
RT02	19 - 37.9	38 - 199.9	8 - 18.9	d_N + 10.7	4.2	1.0	0.70	0.50	0.30	3.53
RT03	38 - 199.9	200 - 255.9	19 - 37.9	d_N + 15.1	6.3	1.3	0.80	0.60	0.40	5.33
RT04	200 - 255.9	256 - 649.9	38 - 199.9	d_N + 20.5	8.1	1.8	0.80	0.60	0.40	7.00
RT08	256 - 649.9	650 - 999.9	200 - 255.9	d_N + 24.0	8.1	1.8	0.90	0.70	0.50	7.00
RT05	650 - 999.9	≥ 1000	256 - 649.9	d_N + 27.3	9.5	2.5	1.00	0.80	0.60	8.40
RT06***	≥ 1000	-	650 - 999.9	d_N + 38.0	13.8	3.0	1.20	0.90	0.70	12.00

* Installation with groove dimensions to ISO 7425/2 is also recommendable.
** At pressures **> 40 MPa** use diameter tolerance H8/f8 (bore/rod) in area of the seal or consult TSS for alternative material or profiles. TSS Slydring®/Wear Rings are not applicable at very small radial clearance; consult the Slydring® catalog.
*** O-Rings with 12 mm cross section are delivered as special profilring.

Ordering Example

Turcon® Glyd Ring® T, complete with O-Ring, standard application, Series RT03 (from Table XLVII).

Rod diameter: d_N = 80.0 mm
TSS Part No.: RT0300800 (from Table XLVIII)

Select the material from Table XLVI. The corresponding code numbers are appended to the TSS Part No. (from Table XLVIII).
Together these form the TSS Article Number. The TSS Article Number for all intermediate sizes not shown in Table XLVIII can be determined following the example below.

**** For diameters ≥ 1000.0 mm multiply only by factor 1.
Example: RT06 for diameter 1200.0 mm.
TSS Article No.: RT06**X1200** - M12N.

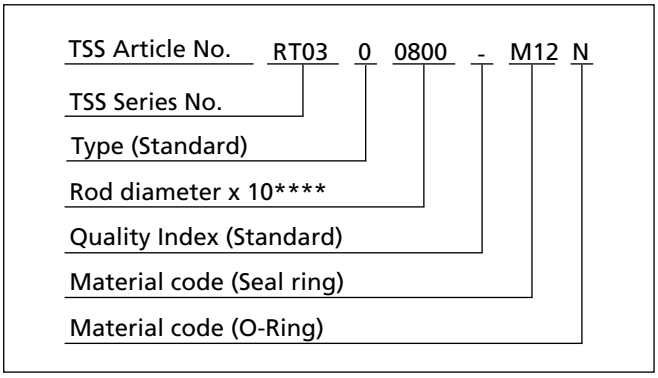

Table XLVIII Installation dimensions / TSS Part No.

Rod Diameter	Groove Diameter	Groove Width	TSS Part No.	O-Ring Size
d_N f8/h9	D_1 H9	L_1 +0.2		
3.0	7.9	2.2	RT0000030	4.47 x 1.78
4.0	**8.9**	**2.2**	**RT0000040**	**5.6 x 1.8**
5.0	**9.9**	**2.2**	**RT0000050**	**6.7 x 1.8**
6.0	**10.9**	**2.2**	**RT0000060**	**7.65 x 1.78**
7.0	11.9	2.2	RT0000070	8.75 x 1.8
8.0	**12.9**	**2.2**	**RT0000080**	**9.5 x 1.8**
8.0	**15.3**	**3.2**	**RT0100080**	**10.77 x 2.62**
10.0	**14.9**	**2.2**	**RT0000100**	**11.8 x 1.8**
10.0	**17.3**	**3.2**	**RT0100100**	**12.37 x 2.62**
12.0	**16.9**	**2.2**	**RT0000120**	**14.0 x 1.78**
12.0	**19.3**	**3.2**	**RT0100120**	**13.94 x 2.62**
14.0	**18.9**	**2.2**	**RT0000140**	**15.6 x 1.78**
14.0	**21.3**	**3.2**	RT0100140	**17.12 x 2.62**
15.0	19.9	2.2	RT0000150	17.17 x 1.78
15.0	22.3	3.2	RT0100150	17.12 x 2.62
16.0	20.9	2.2	RT0000160	17.17 x 1.78
16.0	23.3	3.2	RT0100160	18.72 x 2.62
18.0	22.9	2.2	RT0000180	20.35 x 1.78
18.0	**25.3**	**3.2**	**RT0100180**	**20.29 x 2.62**
19.0	29.7	4.2	RT0200190	23.39 x 3.53
20.0	**27.3**	**3.2**	**RT0100200**	**21.89 x 2.62**

The rod diameters in **bold** type are in accordance with the recommendations of ISO 3320.
Other dimensions and all intermediate sizes up to 2.600 mm diameter including imperial (inch) sizes can be supplied.
All O-Rings with 12 mm cross section are delivered as special profilring.

Rod Diameter	Groove Diameter	Groove Width	TSS Part No.	O-Ring Size
d_N f8/h9	D_1 H9	L_1 +0.2		
20.0	**30.7**	**4.2**	**RT0200200**	**25.0 x 3.53**
22.0	**29.3**	**3.2**	**RT0100220**	**25.07 x 2.62**
22.0	**32.7**	**4.2**	**RT0200220**	**26.57 x 3.53**
24.0	31.3	3.2	RT0100240	26.64 x 2.62
25.0	**32.3**	**3.2**	**RT0100250**	**28.24 x 2.62**
25.0	**35.7**	**4.2**	**RT0200250**	**29.74 x 3.53**
25.4	32.7	3.2	RT0100254	28.24 x 2.62
25.4	36.1	4.2	RT0200254	29.74 x 3.53
26.0	33.3	3.2	RT0100260	28.24 x 2.62
26.0	36.7	4.2	RT0200260	29.74 x 3.53
27.0	34.3	3.2	RT0100270	29.82 x 2.62
28.0	35.3	3.2	RT0100280	29.82 x 2.62
28.0	**38.7**	**4.2**	**RT0200280**	**32.92 x 3.53**
28.575	35.875	3.2	RT0100286	31.42 x 2.62
29.0	36.3	3.2	RT0100290	31.42 x 2.62
30.0	37.3	3.2	RT0100300	32.99 x 2.62
30.0	40.7	4.2	RT0200300	34.52 x 3.53
32.0	39.3	3.2	RT0100320	34.59 x 2.62
32.0	**42.7**	**4.2**	**RT0200320**	**36.09 x 3.53**
35.0	42.3	3.2	RT0100350	37.77 x 2.62
35.0	45.7	4.2	RT0200350	37.69 x 3.53
36.0	43.3	3.2	RT0100360	39.34 x 2.62
36.0	**46.7**	**4.2**	**RT0200360**	**40.87 x 3.53**
38.0	48.7	4.2	RT0200380	40.87 x 3.53
38.0	53.1	6.3	RT0300380	43.82 x 5.33
39.0	49.7	4.2	RT0200390	44.04 x 3.53
40.0	**50.7**	**4.2**	**RT0200400**	**44.04 x 3.53**
40.0	**55.1**	**6.3**	**RT0300400**	**43.82 x 5.33**
42.0	52.7	4.2	RT0200420	47.22 x 3.53
42.0	57.1	6.3	RT0300420	46.99 x 5.33
44.0	54.7	4.2	RT0200440	47.22 x 3.53
44.45	59.55	6.3	RT0300444	50.17 x 5.33
45.0	**55.7**	**4.2**	**RT0200450**	**50.39 x 3.53**
45.0	**60.1**	**6.3**	**RT0300450**	**50.17 x 5.33**
48.0	58.7	4.2	RT0200480	53.57 x 3.53
48.0	63.1	6.3	RT0300480	53.34 x 5.33

The rod diameters in **bold** type are in accordance with the recommendations of ISO 3320.
Other dimensions and all intermediate sizes up to 2.600 mm diameter including imperial (inch) sizes can be supplied.
All O-Rings with 12 mm cross section are delivered as special profilring.

Rod Diameter	Groove Diameter	Groove Width	TSS Part No.	O-Ring Size
d_N f8/h9	D_1 H9	L_1 +0.2		
50.0	**60.7**	**4.2**	**RT0200500**	**53.57 x 3.53**
50.0	**65.1**	**6.3**	**RT0300500**	**56.52 x 5.33**
50.8	61.5	4.2	RT0200508	53.57 x 3.53
50.8	65.9	6.3	RT0300508	56.52 x 5.33
52.0	62.7	4.2	RT0200520	56.74 x 3.53
52.0	67.1	6.3	RT0300520	56.52 x 5.33
54.0	69.1	6.3	RT0300540	59.69 x 5.33
55.0	65.7	4.2	RT0200550	59.92 x 3.53
55.0	70.1	6.3	RT0300550	59.69 x 5.33
56.0	**66.7**	**4.2**	**RT0200560**	**59.92 x 3.53**
56.0	**71.1**	**6.3**	**RT0300560**	**62.87 x 5.33**
58.0	73.1	6.3	RT0300580	62.87 x 5.33
60.0	70.7	4.2	RT0200600	63.09 x 3.53
60.0	75.1	6.3	RT0300600	66.04 x 5.33
63.0	**73.7**	**4.2**	**RT0200630**	**66.27 x 3.53**
63.0	**78.1**	**6.3**	**RT0300630**	**69.22 x 5.33**
65.0	80.1	6.3	RT0300650	69.22 x 5.33
67.0	77.7	4.2	RT0200670	72.62 x 3.53
70.0	80.7	4.2	RT0200700	75.79 x 3.53
70.0	**85.1**	**6.3**	**RT0300700**	**75.57 x 5.33**
72.0	82.7	4.2	RT0200720	75.79 x 3.53
75.0	85.7	4.2	RT0200750	78.97 x 3.53
75.0	90.1	6.3	RT0300750	81.92 x 5.33
80.0	90.7	4.2	RT0200800	85.32 x 3.53
80.0	**95.1**	**6.3**	**RT0300800**	**85.09 x 5.33**
83.0	93.7	4.2	RT0200830	88.49 x 3.53
85.0	100.1	6.3	RT0300850	91.44 x 5.33
86.0	96.7	4.2	RT0200860	91.67 x 3.53
90.0	100.7	4.2	RT0200900	94.84 x 3.53
90.0	**105.1**	**6.3**	**RT0300900**	**94.62 x 5.33**
92.0	102.7	4.2	RT0200920	98.02 x 3.53
95.0	105.7	4.2	RT0200950	101.19 x 3.53
95.0	110.1	6.3	RT0300950	100.97 x 5.33
100.0	110.7	4.2	RT0201000	104.37 x 3.53
100.0	**115.1**	**6.3**	**RT0301000**	**107.32 x 5.33**
101.6	112.3	4.2	RT0201016	107.54 x 3.53

The rod diameters in **bold** type are in accordance with the recommendations of ISO 3320.
Other dimensions and all intermediate sizes up to 2.600 mm diameter including imperial (inch) sizes can be supplied.
All O-Rings with 12 mm cross section are delivered as special profilring.

Rod Diameter	Groove Diameter	Groove Width	TSS Part No.	O-Ring Size
d_N f8/h9	D_1 H9	L_1 +0.2		
101.6	116.7	6.3	RT0301016	107.32 x 5.33
104.7	119.8	6.3	RT0301047	110.49 x 5.33
105.0	115.7	4.2	RT0201050	110.72 x 3.53
105.0	120.1	6.3	RT0301050	110.49 x 5.33
110.0	120.7	4.2	RT0201100	113.89 x 3.53
110.0	**125.1**	**6.3**	**RT0301100**	**116.84 x 5.33**
110.0	130.5	8.1	RT0401100	120.02 x 7.00
112.0	127.1	6.3	RT0301120	116.84 x 5.33
115.0	125.7	4.2	RT0201150	120.24 x 3.53
115.0	130.1	6.3	RT0301150	120.02 x 5.33
118.0	133.1	6.3	RT0301180	123.19 x 5.33
120.0	130.7	4.2	RT0201200	123.42 x 3.53
120.0	135.1	6.3	RT0301200	126.37 x 5.33
125.0	135.7	4.2	RT0201250	129.77 x 3.53
125.0	**140.1**	**6.3**	**RT0301250**	**129.54 x 5.33**
129.0	139.7	4.2	RT0201290	132.94 x 3.53
130.0	140.7	4.2	RT0201300	136.12 x 3.53
130.0	145.1	6.3	RT0301300	135.89 x 5.33
135.0	145.7	4.2	RT0201350	139.29 x 3.53
135.0	150.1	6.3	RT0301350	142.24 x 5.33
140.0	150.7	4.2	RT0201400	145.64 x 3.53
140.0	**155.1**	**6.3**	**RT0301400**	**145.42 x 5.33**
145.0	155.7	4.2	RT0201450	148.82 x 3.53
145.0	160.1	6.3	RT0301450	151.77 x 5.33
150.0	165.1	6.3	RT0301500	158.12 x 5.33
160.0	**175.1**	**6.3**	**RT0301600**	**164.47 x 5.33**
160.0	**180.5**	**8.1**	**RT0401600**	**170.82 x 7.00**
165.0	180.1	6.3	RT0301650	170.82 x 5.33
170.0	180.7	4.2	RT0201700	177.39 x 3.53
170.0	185.1	6.3	RT0301700	177.17 x 5.33
175.0	190.1	6.3	RT0301750	183.52 x 5.33
180.0	190.7	4.2	RT0201800	183.74 x 3.53
180.0	**195.1**	**6.3**	**RT0301800**	**183.52 x 5.33**
180.0	**200.5**	**8.1**	**RT0401800**	**189.87 x 7.00**
190.0	200.7	4.2	RT0201900	196.44 x 3.53
190.0	205.1	6.3	RT0301900	196.22 x 5.33

The rod diameters in **bold** type are in accordance with the recommendations of ISO 3320.
Other dimensions and all intermediate sizes up to 2.600 mm diameter including imperial (inch) sizes can be supplied.
All O-Rings with 12 mm cross section are delivered as special profilring.

Rod Diameter	Groove Diameter	Groove Width	TSS Part No.	O-Ring Size
d_N f8/h9	D_1 H9	L_1 +0.2		
200.0	215.1	6.3	RT0302000	208.92 x 5.33
200.0	**220.5**	**8.1**	**RT0402000**	**208.90 x 7.00**
205.0	220.1	6.3	RT0302050	208.92 x 5.33
210.0	225.1	6.3	RT0302100	215.27 x 5.33
220.0	235.1	6.3	RT0302200	227.97 x 5.33
220.0	**240.5**	**8.1**	**RT0402200**	**227.97 x 7.00**
230.0	245.1	6.3	RT0302300	234.32 x 5.33
230.0	250.5	8.1	RT0402300	240.67 x 7.00
240.0	255.1	6.3	RT0302400	247.02 x 5.33
240.0	260.5	8.1	RT0402400	253.37 x 7.00
250.0	**270.5**	**8.1**	**RT0402500**	**266.07 x 7.00**
260.0	284.0	8.1	RT0802600	266.07 x 7.00
270.0	290.5	8.1	RT0402700	278.77 x 7.00
270.0	294.0	8.1	RT0802700	278.77 x 7.00
275.0	299.0	8.1	RT0802750	291.47 x 7.00
280.0	300.5	8.1	RT0402800	291.47 x 7.00
280.0	**304.0**	**8.1**	**RT0802800**	**291.47 x 7.00**
290.0	310.5	8.1	RT0402900	304.17 x 7.00
290.0	314.0	8.1	RT0802900	304.17 x 7.00
300.0	324.0	8.1	RT0803000	316.87 x 7.00
310.0	330.5	8.1	RT0403100	316.87 x 7.00
310.0	334.0	8.1	RT0803100	316.87 x 7.00
320.0	**344.0**	**8.1**	**RT0803200**	**329.57 x 7.00**
330.0	354.0	8.1	RT0803300	342.27 x 7.00
340.0	364.0	8.1	RT0803400	354.97 x 7.00
350.0	370.5	8.1	RT0403500	354.97 x 7.00
350.0	374.0	8.1	RT0803500	367.67 x 7.00
360.0	**384.0**	**8.1**	**RT0803600**	**367.67 x 7.00**
370.0	390.5	8.1	RT0403700	380.37 x 7.00
370.0	394.0	8.1	RT0803700	380.37 x 7.00
380.0	404.0	8.1	RT0803800	393.07 x 7.00
390.0	414.0	8.1	RT0803900	405.26 x 7.00
400.0	420.5	8.1	RT0404000	417.96 x 7.00
400.0	424.0	8.1	RT0804000	417.96 x 7.00
410.0	434.0	8.1	RT0804100	417.96 x 7.00
420.0	444.0	8.1	RT0804200	430.66 x 7.00

The rod diameters in **bold** type are in accordance with the recommendations of ISO 3320.
Other dimensions and all intermediate sizes up to 2.600 mm diameter including imperial (inch) sizes can be supplied.
All O-Rings with 12 mm cross section are delivered as special profilring.

Rod Diameter	Groove Diameter	Groove Width	TSS Part No.	O-Ring Size
d_N f8/h9	D_1 H9	L_1 +0.2		
430.0	454.0	8.1	RT0804300	443.36 x 7.00
440.0	464.0	8.1	RT0804400	456.06 x 7.00
450.0	474.0	8.1	RT0804500	468.76 x 7.00
460.0	484.0	8.1	RT0804600	468.76 x 7.00
470.0	494.0	8.1	RT0804700	481.46 x 7.00
480.0	504.0	8.1	RT0804800	494.16 x 7.00
490.0	514.0	8.1	RT0804900	506.86 x 7.00
500.0	524.0	8.1	RT0805000	506.86 x 7.00
510.0	534.0	8.1	RT0805100	532.26 x 7.00
520.0	544.0	8.1	RT0805200	532.26 x 7.00
530.0	554.0	8.1	RT0805300	557.66 x 7.00
540.0	564.0	8.1	RT0805400	557.66 x 7.00
550.0	574.0	8.1	RT0805500	557.66 x 7.00
560.0	584.0	8.1	RT0805600	582.68 x 7.00
570.0	594.0	8.1	RT0805700	582.68 x 7.00
580.0	604.0	8.1	RT0805800	608.08 x 7.00
590.0	614.0	8.1	RT0805900	608.08 x 7.00
600.0	624.0	8.1	RT0806000	608.08 x 7.00
610.0	634.0	8.1	RT0806100	633.48 x 7.00
620.0	644.0	8.1	RT0806200	633.48 x 7.00
630.0	654.0	8.1	RT0806300	658.88 x 7.00
640.0	664.0	8.1	RT0806400	658.88 x 7.00
650.0	677.3	9.5	RT0506500	663 x 8.4
660.0	687.3	9.5	RT0506600	673 x 8.4
670.0	697.3	9.5	RT0506700	683 x 8.4
680.0	707.3	9.5	RT0506800	693 x 8.4
688.0	715.3	9.5	RT0506880	701 x 8.4
690.0	717.3	9.5	RT0506900	703 x 8.4
700.0	724.0	8.1	RT0807000	712 x 7.0
710.0	737.3	9.5	RT0507100	723 x 8.4
740.0	767.3	9.5	RT0507400	753 x 8.4
760.0	784.0	8.1	RT0807600	772 x 7.00
770.0	797.3	9.5	RT0507700	783 x 8.4
800.0	827.3	9.5	RT0508000	813 x 8.4
850.0	877.3	9.5	RT0508500	863 x 8.4
870.0	897.3	9.5	RT0508700	883 x 8.4

The rod diameters in **bold** type are in accordance with the recommendations of ISO 3320.
Other dimensions and all intermediate sizes up to 2.600 mm diameter including imperial (inch) sizes can be supplied.
All O-Rings with 12 mm cross section are delivered as special profilring.

Rod Diameter	Groove Diameter	Groove Width	TSS Part No.	O-Ring Size
d_N f8/h9	D_1 H9	L_1 +0.2		
900.0	927.3	9.5	RT0509000	913 x 8.4
910.0	937.3	9.5	RT0509100	923 x 8.4
950.0	977.3	9.5	RT0509500	963 x 8.4
960.0	987.3	9.5	RT0509600	973 x 8.4
1000.0	1027.3	9.5	RT05X1000	1013 x 8.4
1000.0	1038.0	13.8	RT06X1000	1016 x 12
1050.0	1077.3	9.5	RT05X1050	1063 x 8.4
1050.0	1088.0	13.8	RT06X1050	1066 x 12
1100.0	1138.0	13.8	RT06X1100	1116 x 12
1160.0	1187.3	9.5	RT05X1160	1173 x 8.4
1200.0	1227.3	9.5	RT05X1200	1213 x 8.4
1200.0	1238.0	13.8	RT06X1200	1216 x 12
1300.0	1338.0	13.8	RT06X1300	1316 x 12
1500.0	1538.0	13.8	RT06X1500	1516 x 12
1600.0	1638.0	13.8	RT06X1600	1616 x 12
2000.0	2038.0	13.8	RT06X2000	2016 x 12
2600.0	2638.0	13.8	RT06X2600	2616 x 12

The rod diameters in **bold** type are in accordance with the recommendations of ISO 3320.
Other dimensions and all intermediate sizes up to 2.600 mm diameter including imperial (inch) sizes can be supplied.
All O-Rings with 12 mm cross section are delivered as special profilring.

Turcon® AQ-Seal® with Bean Seal

Double Acting

Rubber Energized Plastic Faced Seal

Material:
Turcon® and Zurcon®

■ Turcon® AQ-Seal® with Bean Seal

Description

The Turcon® AQ-Seal® with Bean Seal is a double-acting seal consisting of a seal ring of high-grade modified Turcon® material, a Bean Seal in Zurcon® Z52 and an O-Ring as energizing element.

The Turcon® seal ring and the Bean Seal together assume the dynamic sealing function whilst the O-Ring performs the static sealing function.

The AQ-Seal® with Bean Seal is supplied as standard with radial notches on both sides. These ensure direct pressurizing of the seal under all operating conditions.

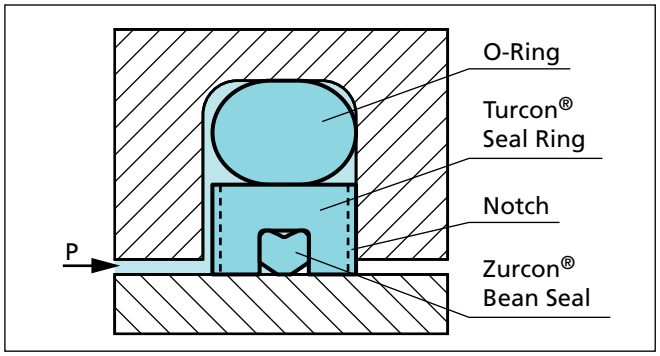

Figure 70 Turcon® AQ-Seal® with Bean Seal

The AQ-Seal® with Bean Seal combines the benefits of a low-friction Turcon® slipper seal with the high sealing characteristics of an elastomeric seal by incorporating a limited foot print Bean Seal in the dynamic sealing face. This optimizes leakage control while minimizing friction.

* Patent-No. EP 0 424 372

Advantages

- High sealing effect in applications requiring media separation, e.g. fluid/fluid or fluid/gas
- Double security through the combination of low friction special materials with elastomer seals
- Higher pressure application, higher sliding speed compared to the AQ-Seal®
- Outstanding sliding properties, no stick-slip effect.
- Simple groove design, small installation space according to ISO 7425/2. Interchangeable with Turcon® Glyd Ring®, Turcon® Glyd Ring® T and Turcon® Stepseal® 2K groove possible
- Available for any rod diameters from 19 and up to 2200 mm.

Application Examples

The Turcon® AQ-Seal® with Bean Seal is the recommended sealing element for double acting positioning and holding cylinders for:

- Mobil hydraulic
- Machine tools
- Presses
- Stabilizers
- Heavy duty suspension cylinders
- Medium separation of fluid /fluid or fluid/gas; please note that one of the media must be lubricating
- Hydro-pneumatic suspensions for heavy vehicles
- Cylinders with retaining function over longer periods such as jacks and support cylinders.

Technical Data

Operating conditions:

Pressure:	Up to 50 MPa with mineral oil Up to 30 MPa for media with reduced lubricating properties
Speed:	Up to 2 m/s with reciprocating movements
Temperature:	-45 °C to +110 °C depending on seal and O-Ring material)
Media:	Mineral oil-based hydraulic fluids, HEES, HETG and flame retardant hydraulic fluids HFA, HFC up to +60 °C, phosphate ester and others, depending on temperature, O-Ring and Bean Seal material compatibility (see Table XLIX)
Clearance:	The maximum permissible radial clearance S_{max} is shown in Table L as a function of the operating pressure and functional diameter.

Important Note:
The above data are maximum values and cannot be used at the same time. e.g. the maximum operating speed depends on material type, pressure, temperature and gap value.
Temperature range also dependent on medium.

Materials

The following material combinations have proven effective for hydraulic applications:

All round material for hydraulic applications with reciprocating, short stroke or helical movements in mineral oils, flame retardant hydraulic fluids HFC, phosphate ester, bio-oils or fluids having less satisfactory lubricating properties:

Turcon® AQ-Seal®:	Turcon® M12	
Bean Seal:	Zurcon® Z52	
O-Ring:	NBR, 70 Shore A	N
	FKM, 70 Shore A	V
Set code:	M12N or M12V	

For medium to heavy applications with reciprocating movements in mineral oils and other media with good lubrication:

Turcon® AQ-Seal®:	Turcon® T46	
Bean Seal:	Zurcon® Z52	
O-Ring:	NBR, 70 Shore A	N
	FKM, 70 Shore A	V
Set code:	T46N or T46V	

For specific applications, all Turcon® materials are available.Other viable material combinations are listed in Table XLIX.

Table XLIX Recommended Turcon® Materials for Turcon® AQ-Seal® Bean Seal

Material, Applications, Properties	Code	O–Ring Material Shore A	Code	O-Ring Operating Temp.* °C	Mating Surface Material	MPa max. Dyna-mic
Turcon® M12 First material choice for seals in linear motion Overall improved properties For new constructions and updating For all commonly applied hydraulic fluids including fluids with low lubrication performance Lowest friction and best sliding properties Lowest wear on selas Improved absorption of abrasion of counter surfcace Mineal fibre and Additives filled Colour: Dark grey	M12	NBR- 70	N	-30 to +100	Steel Steel hardened Steel chrome plated (rod) Steel plated (rod) Cast iron Stainless steel Titanium	40
		NBR- 70 Low temp.	T	-45 to +80		
		FKM- 70	V	-10 to (+200)		
Turcon® T08 For lubricating fluids and linear motion Very high compressive strength and extrusion resistance Hard counter surfaces is recommended Bronze filled Colour: Light to dark brown, which may have variations in shading	T08	NBR- 70	N	-30 to +100	Steel hardened Steel chrome plated (rod) Cast iron	50
		NBR- 70 Low temp.	T	-45 to +80		
		FMK- 70	V	-10 to (+200)		
Turcon® T10 For hydraulic and pneumatic For linear motion in lubricating and non-lubricating fluids High extrusion resistance Good chemical resistance Not for electrically conducting fluids Carbon, graphite filled Colour: Black	T10	NBR- 70	N	-30 to +100	Steel Steel chrome plated (rod) Stainless steel	30
		NBR- 70 Low temp.	T	-45 to +80		
		FKM- 70	V	-10 to (+200)		
Turcon® T29 For lubricating and non-lubricating fluids Good extrusion resistance Surface texture is not suitable for gas sealin Not for electrically conducting fluids Carbon fibre filled Colour: Grey	T29	NBR- 70	N	-30 to +100	Steel Steel chrome plated (rod) Cast iron Stainless steel	30
		NBR- 70 Low temp.	T	-45 to +80		
		FKM- 70	V	-10 to (+200)		
Turcon® T40 For lubricating and non-lubricating fluids High frequency and short strokes Water hydraulics Surface texture is not suitable for gas sealing Carbon fibre filled Colour: Grey.	T40	NBR- 70	N	-30 to +100	Steel chrome plated (rod) Cast iron Stainless steel Aluminium	25
		NBR- 70 Low temp.	T	-45 to +80		
		FKM- 70	V	-10 to (+200)		
Turcon® T46 For lubricated hydraulics in linear motion High compressive strength High extrusion resistance Very good sliding and wear properties Bronze filled Colour: Light to dark brown, which may have variations in shading	T46	NBR- 70	N	-30 to +100	Steel hardened Steel chrome plated (rod) Cast iron	40
		NBR- 70 Low temp.	T	-45 to +80		
		FKM- 70	V	-10 to (+200)		

Turcon® AQ-Seal® Bean Seal

Material, Applications, Properties	Code	O–Ring Material Shore A	Code	O-Ring Operating Temp.* °C	Mating Surface Material	MPa max. Dyna-mic
Zurcon® Z80 For lubricating and non-lubricating fluids Water based fluids, air and gases Dry air pneumatics High abrasion and extrusion resistance For service in abrasive conditions and media with particles Good chemical resistance Limited temperature capability (-60 to +80 °C) UHMWPE (Ultra High Molecular Weight Polyethylene) Colour: White to off-white	Z80	NBR- 70	N	-30 to (+100)	Steel Steel hardened Steel chrome plated (rod) Stainless steel Aluminium Ceramic coating	30
		NBR- 70 Low temp.	T	-45 to +80		

* The O-Ring Operation Temperature is only valid in mineral hydraulic oil (except EPDM). ** Material not suitable for mineral oils.
BAM: Tested by "Bundesanstalt Materialprüfung, Germany". Highlighted materials are standard.

■ Installation Recommendation

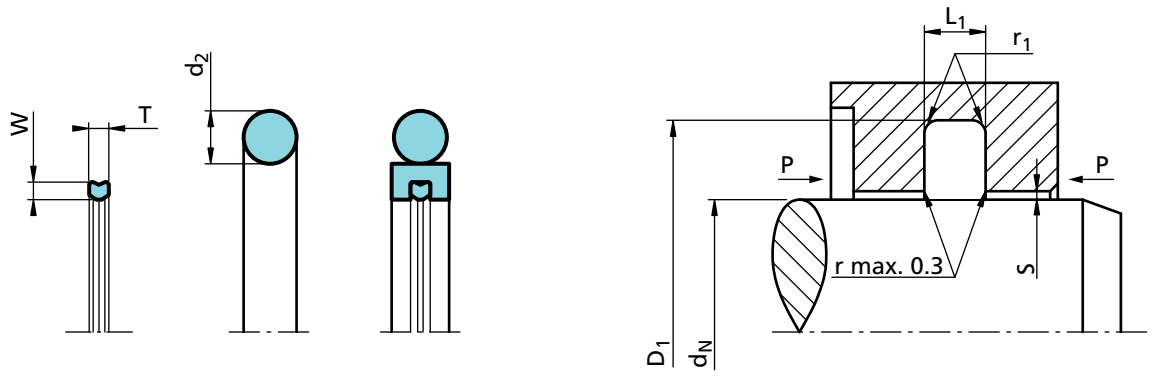

Figure 71 Installation drawing

Table L Installation dimensions – Standard installation

Series No.	Rod Diameter d_N f8/h9		Groove Diameter	Groove Width	Radius	Radial Clearance S max*			O-Ring Cross Sec.	Bean Seal Cross Sec.	
	Standard Application	Available Range	D_1 H9	L_1 +0.2	r_1	10 MPa	20 MPA	40 MPa	d_2	W	T
RQB20	19 - 37.9	18 - 450.0	d_N + 11.0	4.2	1.0	0.25	0.15	0.10	3.35	1.70	1.70
RQB30	38 - 199.9	30 - 650.0	d_N + 15.5	6.3	1.3	0.30	0.20	0.15	5.33	1.70	1.70
RQB40	200 - 255.9	105 - 999.9	d_N + 21.0	8.1	1.8	0.30	0.20	0.15	7.00	2.45	2.45
RQB80	256 - 649.9	120 - 999.9	d_N + 24.5	8.1	1.8	0.30	0.20	0.15	7.00	2.45	2.45
RQB50	650 - 999.9	285 - 999.9	d_N + 28.0	9.5	2.5	0.45	0.30	0.25	8.40	3.50	3.65
RQB5X	-	1000 - 1200.0	d_N + 28.0	9.5	2.5	0.45	0.40	0.35	8.40	3.50	3.65
RQB60	-	650 - 999.9	d_N + 38.0	13.8	3.0	0.70	0.60	0.45	12.00	5.20	5.05
RQB6X	1000 - 2200	-	d_N + 38.0	13.8	3.0	0.70	0.60	0.45	12.00	5.20	5.05

*At pressures > 40 MPa use diameter tolerance H8/f8 (bore/rod) in area of the seal or use Turcon® AQ-Seal® 5 CR.
TSS Slydring®/Wear Rings are not applicable at very small radial clearance; consult the Slydring® catalog.
All AQ-Seal® supplied without Bean Seals must have "W" in the 5th character of the TSS Article Number.

Ordering example

Turcon® AQ-Seal® complete with Bean Seal and O-Rings, standard application:

Series: RQB30 (from Table L)
Rod diameter: d_N = 80.0 mm
TSS Part No.: RQB300800 (from Table LI)
Select the material from Table XLIX. The corresponding code numbers are appended to the TSS Part No. Together these form the TSS Article Number.

The TSS Article Number for all intermediate sizes not shown in Table LI can be determined following the example below.

TSS Article No. RQB3 0 0800 - M12 N

- Series No. — RQB3
- Type (Standard) — 0
- Rod diameter x 10* — 0800
- Quality Index (Standard) — -
- Material Code (Seal Ring) — M12
- Material Code (O-Ring) — N

* For diameters ≥ 1000.0 mm multiply only by factor 1.
Example: RQB5X for diameter 1200.0 mm.
TSS Article No.: RQB5X1200-M12N.

Table LI Installation dimensions / TSS Part No

Rod Dia. d_N h9	Groove Dia. D_1 H9	Groove Width L_1 +0.2	TSS Part No.	O-Ring Sizes
18.0	**29.0**	**4.2**	**RQB200180**	**21.82 x 3.53**
20.0	**30.7**	**4.2**	**RQB200200**	**23.39 x 3.53**
22.0	**32.7**	**4.2**	**RQB200220**	**26.57 x 3.53**
25.0	**35.7**	**4.2**	**RQB200250**	**29.74 x 3.53**
28.0	**38.7**	**4.2**	**RQB200280**	**32.92 x 3.53**
30.0	40.7	4.2	RQB200300	34.52 x 3.53
32.0	**42.7**	**4.2**	**RQB200320**	**36.09 x 3.53**
35.0	45.7	4.2	RQB200350	37.69 x 3.53
36.0	**46.7**	**4.2**	**RQB200360**	**40.87 x 3.53**
40.0	**50.7**	**4.2**	**RQB200400**	**44.04 x 3.53**
40.0	**55.1**	**6.3**	**RQB300400**	**43.82 x 5.33**
42.0	52.7	4.2	RQB200420	47.22 x 3.53
42.0	57.1	6.3	RQB300420	46.99 x 5.33
45.0	**55.7**	**4.2**	**RQB200450**	**50.39 x 3.53**
45.0	**60.1**	**6.3**	**RQB300450**	**50.17 x 5.33**
48.0	58.7	4.2	RQB200480	51.50 x 3.55
48.0	63.1	6.3	RQB300480	53.34 x 5.33
50.0	**60.7**	**4.2**	**RQB200500**	**53.57 x 3.53**
50.0	**65.1**	**6.3**	**RQB300500**	**56.52 x 5.33**
52.0	62.7	4.2	RQB200520	56.74 x 3.53
52.0	67.1	6.3	RQB300520	56.52 x 5.33
55.0	65.7	4.2	RQB200550	59.92 x 3.53
55.0	70.1	6.3	RQB300550	59.69 x 5.33
56.0	**66.7**	**4.2**	**RQB200560**	**59.92 x 3.53**
56.0	**71.1**	**6.3**	**RQB300560**	**62.87 x 5.33**
60.0	70.7	4.2	RQB200600	63.09 x 3.53
60.0	75.1	6.3	RQB300600	66.04 x 5.33
63.0	**73.7**	**4.2**	**RQB200630**	**66.27 x 3.53**
63.0	**78.1**	**6.3**	**RQB300630**	**69.22 x 5.33**
65.0	80.1	6.3	RQB300650	69.22 x 5.33
70.0	80.7	4.2	RQB200700	75.79 x 3.53
70.0	**85.1**	**6.3**	**RQB300700**	**75.57 x 5.33**
75.0	85.7	4.2	RQB200750	78.97 x 3.53
75.0	90.1	6.3	RQB300750	81.92 x 5.33
80.0	90.7	4.2	RQB200800	85.32 x 3.53
80.0	**95.1**	**6.3**	**RQB300800**	**85.09 x 5.33**

Rod Dia. d_N h9	Groove Dia. D_1 H9	Groove Width L_1 +0.2	TSS Part No.	O-Ring Sizes
85.0	100.1	6.3	RQB300850	91.44 x 5.33
90.0	100.7	4.2	RQB200900	94.84 x 3.53
90.0	**105.1**	**6.3**	**RQB300900**	**94.62 x 5.33**
95.0	105.7	4.2	RQB200950	101.19 x 3.53
95.0	110.1	6.3	RQB300950	100.97 x 5.33
100.0	110.7	4.2	RQB201000	104.37 x 3.53
100.0	**115.1**	**6.3**	**RQB301000**	**107.32 x 5.33**
105.0	115.7	4.2	RQB201050	110.72 x 3.53
105.0	120.1	6.3	RQB301050	110.49 x 5.33
110.0	120.7	4.2	RQB201100	113.89 x 3.53
110.0	**125.1**	**6.3**	**RQB301100**	**116.84 x 5.33**
110.0	130.5	8.1	RQB401100	120.02 x 7.00
115.0	125.7	4.2	RQB201150	120.24 x 3.53
115.0	130.1	6.3	RQB301150	120.02 x 5.33
120.0	130.7	4.2	RQB201200	123.42 x 3.53
120.0	135.1	6.3	RQB301200	126.37 x 5.33
125.0	135.7	4.2	RQB201250	129.77 x 3.53
125.0	**140.1**	**6.3**	**RQB301250**	**129.54 x 5.33**
130.0	140.7	4.2	RQB201300	136.12 x 3.53
130.0	145.1	6.3	RQB301300	135.89 x 5.33
135.0	145.7	4.2	RQB201350	139.29 x 3.53
135.0	150.1	6.3	RQB301350	142.24 x 5.33
140.0	150.7	4.2	RQB201400	145.64 x 3.53
140.0	**155.1**	**6.3**	**RQB301400**	**145.42 x 5.33**
145.0	155.7	4.2	RQB201450	148.82 x 3.53
145.0	160.1	6.3	RQB301450	151.77 x 5.33
150.0	165.1	6.3	RQB301500	158.12 x 5.33
160.0	**175.1**	**6.3**	**RQB301600**	**164.47 x 5.33**
160.0	**180.5**	**8.1**	**RQB401600**	**170.82 x 7.00**
165.0	180.1	6.3	RQB301650	170.82 x 5.33
170.0	180.7	4.2	RQB201700	177.39 x 3.53
170.0	185.1	6.3	RQB301700	177.17 x 5.33
175.0	190.1	6.3	RQB301750	183.52 x 5.33
180.0	190.7	4.2	RQB201800	183.74 x 3.53
180.0	**195.1**	**6.3**	**RQB301800**	**183.52 x 5.33**
180.0	**200.5**	**8.1**	**RQB401800**	**189.87 x 7.00**

Rod Dia.	Groove Dia.	Groove Width	TSS Part No.	O-Ring Sizes
d_N h9	D_1 H9	L_1 +0.2		
190.0	200.7	4.2	RQB201900	196.44 x 3.53
190.0	205.1	6.3	RQB301900	196.22 x 5.33
200.0	215.1	6.3	RQB302000	208.92 x 5.33
200.0	**220.5**	**8.1**	**RQB402000**	**208.92 x 7.00**
210.0	225.1	6.3	RQB302100	215.27 x 5.33
220.0	235.1	6.3	RQB302200	227.97 x 5.33
220.0	**240.5**	**8.1**	**RQB402200**	**227.97 x 7.00**
230.0	245.1	6.3	RQB302300	234.32 x 5.33
230.0	250.5	8.1	RQB402300	240.67 x 7.00
240.0	255.1	6.3	RQB302400	247.02 x 5.33
240.0	260.5	8.1	RQB402400	253.37 x 7.00
250.0	**270.5**	**8.1**	**RQB402500**	**266.07 x 7.00**
260.0	284.0	8.1	RQB802600	266.07 x 7.00
270.0	290.5	8.1	RQB402700	278.77 x 7.00
270.0	294.0	8.1	RQB802700	278.77 x 7.00
280.0	300.5	8.1	RQB402800	291.47 x 7.00
280.0	**304.0**	**8.1**	**RQB802800**	**291.47 x 7.00**
300.0	324.0	8.1	RQB803000	316.87 x 7.00
320.0	**344.0**	**8.1**	**RQB803200**	**329.57 x 7.00**
350.0	370.5	8.1	RQB403500	354.97 x 7.00
350.0	374.0	8.1	RQB803500	367.67 x 7.00
360.0	**384.0**	**8.1**	**RQB803600**	**367.67 x 7.00**
400.0	420.5	8.1	RQB404000	417.96 x 7.00
400.0	424.0	8.1	RQB804000	417.96 x 7.00

Rod Dia.	Groove Dia.	Groove Width	TSS Part No.	O-Ring Sizes
d_N h9	D_1 H9	L_1 +0.2		
450.0	474.0	8.1	RQB804500	468.76 x 7.00
500.0	524.0	8.1	RQB805000	506.86 x 7.00
550.0	574.0	8.1	RQB805500	557.66 x 7.00
600.0	624.0	8.1	RQB806000	608.08 x 7.00
650.0	677.3	9.5	RQB506500	663 x 8.40
700.0	724.0	8.1	RQB807000	712 x 7.00
800.0	827.3	9.5	RQB508000	813 x 8.40
900.0	927.3	9.5	RQB509000	913 x 8.40
1000.0	1027.3	9.5	RQB5X1000	1013 x 8.40
1000.0	1038.0	13.8	RQB6X1000	1016 x 12.00
1100.0	1138.0	13.8	RQB6X1100	1116 x 12.00
1200.0	1227.3	9.5	RQB5X1200	1213 x 8.40
1200.0	1238.0	13.8	RQB6X1200	1216 x 12.00
1300.0	1338.0	13.8	RQB6X1300	1316 x 12.00
1500.0	1538.0	13.8	RQB6X1500	1516 x 12.00
2000.0	2038.0	13.8	RQB6X2000	2016 x 12.00
2200.0	2238.0	13.8	RQB6X2200	2216 x 12.00

The rod diameters in **bold** type are in accordance with the recommendations of ISO 3320.
Other dimensions and all intermediate sizes up to 2200 mm diameter, including imperial (inch) sizes converted to mm, can be supplied.
All O-Rings with 12 mm cross section are delivered as special profilring.

Turcon® AQ-Seal® 5 with Bean Seal

Double Acting

Rubber Energized Plastic Faced Seal

Material:
Turcon® and Zurcon®

■ Turcon® AQ-Seal® 5 with Bean Seal

Description

The Turcon® AQ-Seal® 5 with Bean Seal is a patented development of the proven standard Turcon® AQ-Seal®.

The seal profile of the Turcon® ring has been redesigned on both the dynamic and static sealing surface. Two O-Rings are used to energize the seal instead of one.

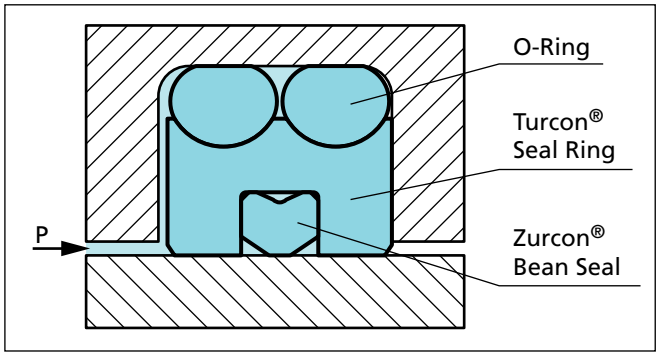

Figure 72 Turcon® AQ-Seal® 5 with Bean Seal

The AQ-Seal® 5 with Bean Seal combines the benefits of a low-friction Turcon® slipper seal with the high sealing characteristics of an elastomeric seal by incorporating a limited foot print Bean Seal in the dynamic sealing face.

This optimizes leakage control while minimizing friction. The particular characteristics of the AQ-Seal® 5 with Bean Seal are the special seal profile with a defined seal edge and the use of two O-Rings as energizing elements to optimize the pressure profile and to reduce the force of attack at gas permeability.

* Patent-No. EP 0 424 372

Advantages

- High sealing effect in applications requiring media separation, e.g. fluid/fluid or fluid/gas
- Double security through the combination of low-friction special materials with elastomer seals
- Higher pressure application, higher sliding speed compared to the AQ-Seal®
- Outstanding sliding properties, no stick-slip effect.
- Available for any rod diameters from 32 and up to 2200 mm

Application Examples

- Mobil hydraulic
- Presses
- Stabilizers
- Heavy duty suspension cylinders
- Medium separation of fluid /fluid or fluid/gas; please note that one of the media must be lubricating
- Hydro-pneumatic suspensions for heavy vehicles
- Cylinders with retaining function over longer periods such as jacks and support cylinders.

Technical Data

Operating conditions:

Pressure:	Up to 60 MPa with mineral oil Up to 40 MPa for media with reduced lubricating properties
Speed:	Up to 3 m/s with reciprocating movements
Temperature:	-45 °C to +110 °C (depending on seal and O-Ring material)
Media:	Mineral oil-based hydraulic fluids, HEES, HETG and flame retardant hydraulic fluids HFA, HFC up to +60 °C, phosphate ester and others, depending on temperature, O-Ring and Bean Seal material compatibility (see Table LII).
Clearance:	The maximum permissible radial clearance S_{max} is shown in Table LIII as a function of the operating pressure and functional diameter.

Important Note:
The above data are maximum values and cannot be used at the same time. e.g. the maximum operating speed depends on material type, pressure, temperature and gap value.
Temperature range also dependent on medium.

Materials

The following material combinations have proven effective for hydraulic applications:

All round material for hydraulic applications with reciprocating, short stroke or helical movements in mineral oils, flame retardant hydraulic fluids HFC, phosphate ester, bio-oils or fluids having less satisfactory lubricating properties:

Turcon® AQ-Seal® 5:	Turcon® M12	
Bean Seal:	Zurcon® Z52	
O-Ring:	NBR, 70 Shore A	N
	FKM, 70 Shore A	V
Set code:	M12N or M12V	

For medium to heavy applications with reciprocating movements in mineral oils and other media with good lubrication:

Turcon® AQ-Seal® 5:	Turcon® T46	
Bean Seal:	Zurcon® Z52	
O-Ring:	NBR, 70 Shore A	N
	FKM, 70 Shore A	V
Set code:	T46N or T46V	

For specific applications, all Turcon® materials are available.
Other viable material combinations are listed in Table LII.

Table LII Recommended Turcon® Materials for Turcon® AQ-Seal® 5 Bean Seal

Material, Applications, Properties	Code	O–Ring Material Shore A	Code	O-Ring Operating Temp.* °C	Mating Surface Material	MPa max. Dyna-mic
Turcon® M12 First material choice for seals in linear motion Overall improved properties For new constructions and updating For all commonly applied hydraulic fluids including fluds with low lubrication performance Lowest friction and best sliding properties Loweset wear on seals Improved absorption of abrasive cintainments No wear or abrasion of counter surfcae Mineal fibre and Additives filled Colour: Dark grey	M12	NBR- 70	N	-30 to +100	Steel Steel hardened Steel chrome plated (rod) Steel plated (rod) Cast iron Stainless steel Titanium	50
		NBR- 70 Low temp.	T	-45 to +80		
		FKM- 70	V	-10 to (+200)		
Turcon® T08 For lubricating fluids and linear motion Very high compressive strength and extrusion resistance Hard counter surfaces is recommended Bronze filled Colour: Light to dark brown, which may have variations in shading	T08	NBR- 70	N	-30 to +100	Steel hardened Steel chrome plated (rod) Cast iron	60
		NBR- 70 Low temp.	T	-45 to +80		
		FKM- 70	V	-10 to (+200)		
Turcon® T10 For hydraulic and pneumatic For linear motion in lubricating and non-lubricating fluids High extrusion resistance Good chemical resistance Not for electrically conducting fluids Carbon, graphite filled Colour: Black	T10	NBR- 70	N	-30 to +100	Steel Steel chrome plated (rod) Stainless steel	40
		NBR- 70 Low temp.	T	-45 to +80		
		FKM- 70	V	-10 to (+200)		
Turcon® T29 For lubricating and non-lubricating fluids Good extrusion resistance Surface texture is not suitable for gas sealing Not for electrically conducting fluids Carbon fibre filled Colour: Grey	T29	NBR- 70	N	-30 to +100	Steel Steel chrome plated (rod) Cast iron Stainless steel	30
		NBR- 70 Low temp.	T	-45 to +80		
		FKM- 70	V	-10 to (+200)		
Turcon® T40 For lubricating and non-lubricating fluids High frequency and short strokes Water hydraulics Surface texture is not suitable for gas sealing Carbon fibre filled Colour: Grey.	T40	NBR- 70	N	-30 to +100	Steel Steel chrome plated (rod) Cast iron Stainless steel Aluminium	25
		NBR- 70 Low temp.	T	-45 to +80		
		FKM- 70	V	-10 to (+200)		
Turcon® T46 For lubricated hydraulics in linear motion High compressive strength High extrusion resistance Very good sliding and wear properties Bronze filled Colour: Light to dark brown, which may have variations in shading.	T46	NBR- 70	N	-30 to +100	Steel hardened Steel chrome plated (rod) Cast iron	50
		NBR- 70 Low temp.	T	-45 to +80		
		FKM- 70	V	-10 to (+200)		

Turcon® AQ-Seal® 5 Bean Seal

Material, Applications, Properties	Code	O–Ring Material Shore A	Code	O-Ring Operating Temp.* °C	Mating Surface Material	MPa max. Dyna-mic
Zurcon® Z80 For lubrication and non-lubrication fluids Water based fluids, air and gases Dry air pneumatics High abrasion and extrusion resistance For service in abrasive conditions and media with particles Good chemical resistance Limited temperature capability (-60 to +80 °C) UHMWPE (Ultra High Molecular Weight Polyethylene) Colour: White to off-white	Z80	NBR- 70	N	-30 to (+100)	Steel Steel hardened Steel chrome plated (rod) Stainless steel Aluminium Ceramic coating	35
		NBR- 70 Low temp.	T	-45 to +80		

* The O-Ring Operation Temperature is only valid in mineral hydraulic oil (except EPDM). ** Material not suitable for mineral oils.
BAM: Tested by "Bundesanstalt Materialprüfung, Germany". Highlighted materials are standard.

■ Installation Recommendation

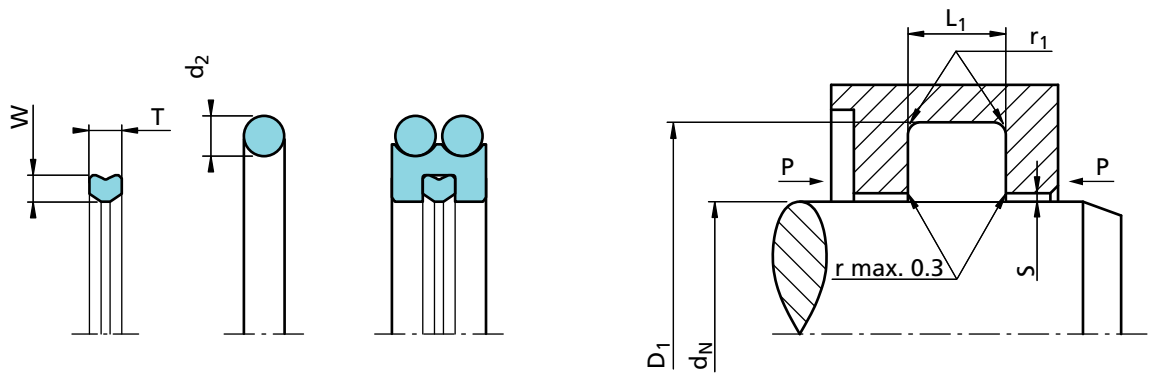

Figure 73 Installation drawing

Table LIII Installation dimensions – Standard installation

Series No.	Rod Diameter d_N f8/h9		Groove Diameter	Groove Width	Radius	Radial Clearance S max*			O-Ring Cross Sec.	Bean Seal Cross Sec.	
	Standard Application	Available Range	D_1 H9	L_1 +0.2	r_1	10 MPa	20 MPA	40 MPa	d_2	W	T
RQC10	40 - 79.9	32 - 250.0	d_N + 10.0	6.3	0.6	0.30	0.20	0.15	2.62	1.70	1.70
RQC20	80 - 132.9	50 - 450.0	d_N + 13.0	8.3	1.0	0.40	0.30	0.15	3.53	2.45	2.45
RQC30	133 - 462.9	80 - 650.0	d_N + 18.0	12.3	1.3	0.40	0.30	0.20	5.33	3.50	3.65
RQC40	190 - 999.9	180 - 199.9	d_N + 31.0	16.3	1.8	0.50	0.40	0.30	7.00	5.20	5.05
RQC4X	1000 - 2200.0	-	d_N + 31.0	16.3	1.8	0.50	0.40	0.30	7.00	5.20	5.05

*At pressures > 40 MPa use diameter tolerance H8/f8 (bore/rod) in area of the seal or use Turcon® AQ-Seal® 5 CR.
TSS Slydring®/Wear Rings are not applicable at very small radial clearance; consult the Slydring® catalog.
All AQ-Seal® 5 supplied without Bean Seals must have "W" in the 5th character.

Ordering example

Turcon® AQ-Seal® 5 complete with Bean Seal and O-Rings, standard application:

Series: RQC20 (from Table LIII)
Rod diameter: d_N = 80.0 mm
TSS Part No.: RQC200800 (from Table LIV)

Select the material from Table LII. The corresponding code numbers are appended to the TSS Part No. Together these form the TSS Article Number.

The TSS Article Number for all intermediate sizes not shown in Table LIV can be determined following the example below.

TSS Article No. RQC2 0 0800 - M12 N

- Series No. — RQC2
- Type (Standard) — 0
- Rod diameter x 10* — 0800
- Quality Index (Standard) — -
- Material Code (Seal Ring) — M12
- Material Code (O-Ring) — N

* For diameters ≥ 1000.0 mm multiply only by factor 1.
Example: RQC4X for diameter 1200.0 mm.
TSS Article No.: RQC4X1200-M12N.

Table LIV Installation dimensions / TSS Part No

Bore Dia. d_N f8/h9	Groove Dia. D_1 H9	Groove Width L_1 +0.2	TSS Part No.	O-Ring Dimensions 2 of
40.0	**50.0**	**6.3**	**RQC100400**	**44.12 x 2.62**
42.0	52.0	6.3	RQC100420	47.29 x 2,62
45.0	55.0	6.3	RQC100450	50.47 x 2.62
48.0	58.0	6.3	RQC100480	52.07 x 2.62
50.0	**60.0**	**6.3**	**RQC100500**	**55.25 x 2.62**
50.0	**63.0**	**8.3**	**RQC200500**	**56.74 x 3.53**
52.0	62.0	6.3	RQC100520	56.82 x 2.62
55.0	65.0	6.3	RQC100550	59.99 x 2.62
56.0	**66.0**	**6.3**	**RQC100560**	**61.60 x 2.62**
56.0	**69.0**	**8.3**	**RGC200560**	**63.09 x 3.53**
60.0	70.0	6.3	RQC100600	64.77 x 2.62
60.0	73.0	8.3	RQC200600	66.27 x 3.53
63.0	**73.0**	**6.3**	**RQC100630**	**67.95 x 2.62**
63.0	**76.0**	**8.3**	**RQC200630**	**69.44 x 3.53**
65.0	75.0	6.3	RQC100650	69.52 X 2.62
70.0	80.0	6.3	RQC100700	75.87 X 2.62
70.0	83.0	8.3	RQC200700	75.79 X 3.53
75.0	85.0	6.3	RQC100750	82.22 X 2.62
75.0	88.0	8.3	RQC200750	82.14 X 3.53
80.0	**90.0**	**6.3**	**RQC100800**	**82.22 x 2.62**
80.0	**93.0**	**8.3**	**RQC200800**	**85.32 x 3.53**
85.0	98.0	8.3	RQC200850	91.67 x 3,53
90.0	100.0	6.3	RQC100900	94.92 x 2.62
90.0	103.0	8.3	RQC200900	94.84 x 3.53
95.0	108.0	8.3	RQC200950	101.19 x 3.53
100.0	**110.0**	**6.3**	**RQC101000**	**101.27 x 2.62**
100.0	**113.0**	**8.3**	**RQC201000**	**104.37 x 3.53**
105.0	118.0	8.3	RQC201050	110.72 x 3.53
110.0	120.0	6.3	RQC101100	113.97 x 2.62
110.0	123.0	8.3	RQC201100	117.07 x 3.53
115.0	128.0	8.3	RQC201150	120,24 x 3,53
120.0	133.0	8.3	RQC201200	126.59 x 3.53
120.0	138.0	12.3	RQC301200	126.37 x 5.33
125.0	**138.0**	**8.3**	**RQC201250**	**129.77 x 3.53**
125.0	**143.0**	**12.3**	**RQC301250**	**132.72 x 5.33**
130.0	143.0	8.3	RQC201300	136.12 x 3.53

Bore Dia. d_N f8/h9	Groove Dia. D_1 H9	Groove Width L_1 +0.2	TSS Part No.	O-Ring Dimensions 2 of
130.0	148.0	12.3	RQC301300	135.89 x 5.33
135.0	148.0	8.3	RQC201350	139.29 x 3.53
135.0	153.0	12.3	RQC301350	142.24 x 5.33
140.0	158.0	12.3	RQC301400	145.42 x 5.33
150.0	168.0	12.3	RQC301500	158.12 x 5.33
160.0	**173.0**	**8.3**	**RQC201600**	**164.69 x 3.53**
160.0	**178.0**	**12.3**	**RQC301600**	**164.47 x 5.33**
170.0	188.0	12.3	RQC301700	177.17 x 5.33
180.0	198.0	12.3	RQC301800	183.52 x 5.33
190.0	208.0	12.3	RQC301900	196.22 x 5.33
200.0	**218.0**	**12.3**	**RQC302000**	**208.92 x 5.33**
220.0	238.0	12.3	RQC302200	227.97 x 5.33
230.0	248.0	12.3	RQC302300	234.32 x 5.33
240.0	258.0	12.3	RQC302400	247.02 x 5.33
250.0	**258.0**	**12.3**	**RQC302500**	**253.37 x 5.33**
280.0	298.0	12.3	RQC302800	291.47 x 5.33
300.0	318.0	12.3	RQC303000	304.17 x 5.33
320.0	**338.0**	**12.3**	**RQC303200**	**329.57 x 5.33**
350.0	368.0	12.3	RQC303500	354.97 x 5.33
400.0	**418.0**	**12.3**	**RQC304000**	**405.26 x 5.33**
420.0	438.0	12.3	RQC304200	430.66 x 5.33
450.0	468.0	12.3	RQC304500	456.06 x 5.33
465.0	496.0	16.3	RQC404650	481.38 x 7.00
480.0	511.0	16.3	RQC404800	494.16 x 7.00
500.0	**531.0**	**16.3**	**RQC405000**	**506.86 x 7.00**
550.0	581.0	16.3	RQC405500	557.66 x 7.00
600.0	631.0	16.3	RQC406000	608.08 x 7.00
650.0	681.0	16.3	RQC406500	668 x 7.00
700.0	731.0	16.3	RQC407000	718 x 7.00
750.0	781.0	16.3	RQC407500	768 x 7.00
800.0	831.0	16.3	RQC408000	818 x 7.00
850.0	881.0	16.3	RQC408500	868 x 7.00
900.0	931.0	16.3	RQC409000	918 x 7.00
950.0	981.0	16.3	RQC409500	968 x 7.00
1000.0	1031.0	16.3	RQC4X1000	1018 x 7.00
1050.0	1081.0	16.3	RQC4X1050	1068 x 7.00

Bore Dia.	Groove Dia.	Groove Width	TSS Part No.	O-Ring Dimensions 2 of
d_N f8/h9	D_1 H9	L_1 +0.2		
1200.0	1231.0	16.3	RQC4X1200	1218 x 7.00
1300.0	1331.0	16.3	RQC4X1300	1318 x 7.00
1400.0	1431.0	16.3	RQC4X1400	1418 x 7.00
1500.0	1531.0	16.3	RQC4X1500	1518 x 7.00
2000.0	2031.0	16.3	RQC4X2000	2018 x 7.00
2200.0	2231.0	16.3	RQC4X2200	2218 x 7.00

The rod diameters in **bold** type are in accordance with the recommendations of ISO 3320.
Other dimensions and all intermediate sizes up to 2200 mm diameter, including imperial (inch) sizes converted to mm, can be supplied.

Zurcon® Wynseal M

Double Acting

Rubber Energized Plastic Faced Seal

Material:
Turcon® and Zurcon®

■ Zurcon® Wynseal M

Description

The Zurcon® Wynseal M for rod sealing is a machined Wynseal version in Zurcon® or Turcon® materials.

The Zurcon® Wynseal M is a double-acting seal consisting of a Zurcon® or Turcon® seal ring and an O-Ring as energizing element - see Figure 74.

The seal is designed with a seal edge profile. Two external seal edges act as primary seal for pressures from both sides and prevent any build-up of hydrodynamic pressure over the seal profile and the risk of the blow-by effect. The central sealing and supporting bulge increases the sealing effect *. Notches are provided on both sides on the plane surfaces to provide activation of the energizing O-Ring. These ensure direct pressure loading of the seal under all operating conditions.

Installation groove is identical to that for the Turcon® Glyd Ring®.

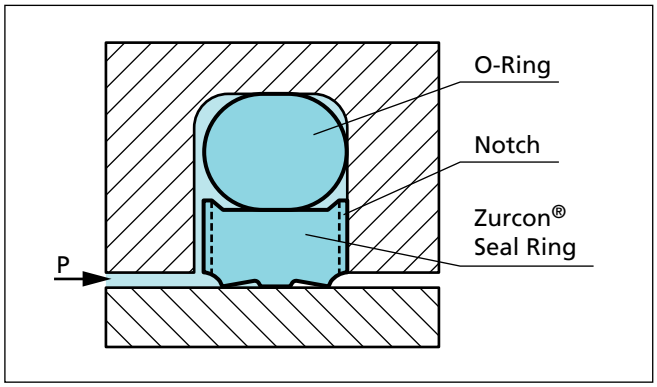

Figure 74 Zurcon® Wynseal M

* Only from RW52 and the following Series No.; PW50 is without seal edge profile and PW51 is without supporting bulge.

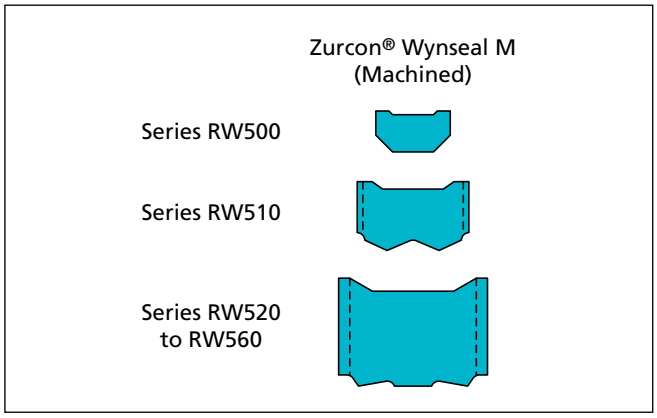

Figure 75 Zurcon® Wynseal M series profile

Advantages

- High static and dynamic sealing effect
- High abrasion resistance (Zurcon® materials)
- Simple groove design, one-piece piston possible
- Diameter range - from 3 to 2600 mm
- Suitable for grooves to ISO 7425/2
- For lower friction
- Higher temperature
- Higher pressure
- Better chemical resistance

Application Examples

The Zurcon® Wynseal M recommended for double acting rod seal for hydraulic components in various sectors such as:

- Machine tools
- Forklifts & handling machinery
- Agriculture
- Industrial hydraulic light to medium duty

Technical Data

Operating conditions:

Pressure:	Up to 50 MPa
Speed:	Up to 10 m/s
Temperature:	-45 °C to +200 °C (depending on seal and O-Ring material)
Media:	Mineral oil-based hydraulic fluids, flame retardant hydraulic fluids, environmentally safe hydraulic fluids (bio-oils), phosphate ester, water and others, depending on the O-Ring material compatibility - see Table LV.
Clearance:	The maximum permissible radial clearance S_{max} is shown in Table LVI, as a function of the operating pressure and functional diameter.

Important Note:
The above data are maximum values and cannot be used at the same time. e.g. the maximum operating speed depends on material type, pressure, temperature and gap value.
Temperature range also dependent on medium.

Installation

Zurcon® Wynseal® is installed according to information at page 11 to 12.

Closed groove installation applies same dimensions as for Turcon® Stepseal® 2K at Table IV page 12.

Materials

The following material combinations have proven effective for hydraulic applications:

For light to medium applications with reciprocating movements in mineral oils and other media with good lubrication:

Turcon® Wynseal M:	Zurcon® Z52
O-Ring:	NBR, 70 Shore A N
Set code:	Z52N

All round material for hydraulic applications with reciprocating, short stroke or helical movements in mineral oils, flame retardant hydraulic fluids HFC, phosphate ester, bio-oils or fluids having less satisfactory lubricating properties:

Turcon® Wynseal M:	Turcon® M12
O-Ring:	NBR, 70 Shore A N FKM, 70 Shore A V
Set code:	M12N or M12V

For specific applications, all Turcon® materials are available.

Other viable material combinations are listed in Table LV.

Table LV Turcon® and Zurcon® Materials for Zurcon® Wynseal M

Material, Applications, Properties	Code	O-Ring Material Shore A	Code	O-Ring Operating Temp.*°C	Mating Surface Material	MPa max. Dyna-mic
Turcon® M12 First material choice for seals in linear motion Overall improved properties For new constructions and updating For all commonly applied hydraulic fluids including fluids with low lubrication performance Lowest friction and best sliding properties Lowest wear on seals Improved absorption of abrasive contaminants No wear or abrasion of counter surface Mineral fibre and Additives filled Colour: Dark grey	M12	NBR- 70	N	-30 to +100	Steel Steel hardened Steel chrome plated (rod) Steel plated (rod) Cast iron Stainless steel Titanium	35
		NBR- 70 Low temp.	T	-45 to +80		
		FKM- 70	V	-10 to +200		
Turcon® T08 For lubricating fluids and linear motion Very high compressive strength and extrusion resistance Hard counter surfaces is recommended Bronze filled Colour: Light to dark brown, which may have variations in shading	T08	NBR- 70	N	-30 to +100	Steel hardened Steel chrome plated (rod) Cast iron	50
		NBR- 70 Low temp.	T	-45 to +80		
		FKM- 70	V	-10 to +200		
Turcon® T40 For lubricating and non-lubricating fluids High frequency and short strokes **Water hydraulics** Surface texture is not suitable for gas sealing Carbon fibre filled Colour: Grey	T40	NBR- 70	N	-30 to +100	Steel Steel hardened Steel chrome plated (rod) Cast iron Stainless steel Aluminium	25
		NBR- 70 Low temp.	T	-45 to +80		
		FKM- 70	V	-10 to +200		
		EPDM- 70	E**	-45 to +145		
Turcon® T46 For lubricated hydraulics in linear motion High compressive strength High extrusion resistance Very good sliding and wear properties BAM tested Bronze filled Colour: Light to dark brown, which may have variations in shading..	T46	NBR- 70	N	-30 to +100	Steel hardened Steel chrome plated (rod) Cast iron	35
		NBR- 70 Low temp.	T	-45 to +80		
		FKM- 70	V	-10 to +200		
Zurcon® Z51*** For mineral oil based fluids **Very high abrasion and extrusion resistance** For counter surface with rougher surface finish Limited chemical resistance Max. working temperature 110 °C Cast polyurethane Colour: Yellow to light-brown	Z51	NBR- 70	N	-30 to +100	Steel Steel hardened Steel chrome plated (rod) Cast iron Stainless steel Ceramic coating	45
		NBR- 70 Low temp.	T	-45 to +80		

* The O-Ring Operation Temperature is only valid in mineral hydraulic oil - except EPDM. ** Material not suitable for mineral oils.
*** Max. ø 2200 mm BAM Tested by "Bundesanstalt Materialprüfung, Germany". Highlighted materials are standard.

Zurcon® Wynseal M

Material, Applications, Properties	Code	O-Ring Material Shore A	Code	O-Ring Operating Temp.*°C	Mating Surface Material	MPa max. Dyna-mic
Zurcon® Z52* **** For mineral oil based fluids High abrasion resistance For counter surface with rougher surface finish Good extrusion resistance Limited chemical resistance Max. working temperature 110 °C Cast polyurethane Colour: Turquoise	Z52	NBR- 70	N	-30 to +100	Steel Steel hardened Steel chrome plated (rod) Cast iron Stainless steel Ceramic coating	25
		NBR- 70 Low temp.	T	-45 to +80		
Zurcon® Z80 For lubricating and non-lubricating fluids Water based fluids, air and gases Dry air pneumatics High abrasion and extrusion resistance For service in abrasive conditions and media with particles Good chemical resistance Limited temperature capability (-60 to +80 °C) UHMWPE (Ultra High Molecular Weight Polyethylene) Colour: White to off-white	Z80	NBR- 70	N	-30 to (+100)	Steel Steel hardened Steel chrome plated (rod) Stainless steel Aluminium Bronze Ceramic coating	30
		NBR- 70 Low temp.	T	-45 to +80		
		EPDM- 70	E**	-45 to(+145)		

* The O-Ring Operation Temperature is only valid in mineral hydraulic oil - except EPDM. ** Material not suitable for mineral oils.
*** Max. ø 2200 mm BAM Tested by "Bundesanstalt Materialprüfung, Germany". Highlighted materials are standard.

■ Installation Recommendation

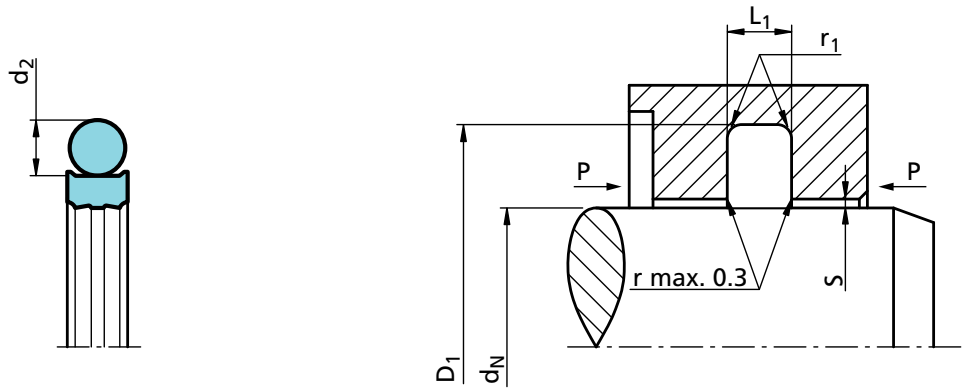

Figure 76 Installation drawing

Table LVI Installation dimensions - Standard recommendations

Series No.	Recommended diameter range	Available range	Groove Diameter*	Groove width	Radius	Radial Clearance S max.**			O-Ring Cross-Section
	d_N f8/h9	d_N f8/h9	D_1 H9	L_1 +0.2/-0	r_1	10 MPa	20 MPa	40 MPa	d_2
RW500	3 - 7.9	3 - 130.0	D_1 + 4.9	2.20	0.4	0.40	0.30	0.20	1.78
RW510	8 - 18.9	8 - 250.0	D_1 + 7.3	3.20	0.6	0.60	0.50	0.30	2.65
RW520	19 - 37.9	8 - 450.0	D_1 + 10.7	4.20	1.0	0.70	0.50	0.30	3.53
RW530	38 - 199.9	19 - 650.0	D_1 + 15.1	6,30	1.3	0.80	0.60	0.40	5.33
RW540	200 - 255.9	38 - 650.0	D_1 + 20.5	8,10	1.8	0.80	0.60	0.40	7.00
RW580	256 - 649.9	200 - 999.9	D_1 + 24.0	8,10	1.8	0.90	0.35	0.50	7.00
RW550	650 - 999.9	256 - 999.9	D_1 + 27.3	9,50	2.5	1.00	0.80	0.60	8.40
RW55X	1000 - 1200	-	D_1 + 27.3	9,50	2.5	1.00	0.80	0.60	8.40
RW560**	-	650 - 999.9	D_1 + 38.0	13.80	3.0	1.20	0.90	0.70	12.00
RW56X**	1000 - 2600***	-	D_1 + 38.0	13.80	3.0	1.20	0.90	0.70	12.00

* Installation with groove dimensions to ISO 7425/2 is also recommendable.
** At pressure > 40 MPa use diameter tolerance h8/F8 (rod/bore) in area of the seal or consult TSS for alternative material or profiles. TSS Slydring®/Wear Rings are not applicable at very small radial clearance; consult the Slydring® catalog.
** O-Rings with 12 mm cross section are delivered as special profilring. *** Z51 and Z52 max ø 2200 mm.

Ordering example

Zurcon® Wynseal M complete with O-Ring, standard application;

Series: RW540 (from Table LVI).
Rod diameter: d_N = 250.0 mm.
TSS Part No.: RW5402500 (from Table LVII).

Select the material from Table LV.
The corresponding code numbers are appended to the TSS Part No. Together these form the TSS Article Number.

The TSS Article Number for all intermediate sizes not shown in Table LVII can be determined following the example.

TSS Article No. RW54 0 2500 - M12 N

- Series No. — RW54
- Type (Standard) — 0
- Rod diameter x 10* — 2500
- Quality Index (Standard) — -
- Material Code (Seal Ring) — M12
- Material Code (O-Ring) — N

* For diameters ≥ 1000.0 mm multiply only by factor 1.
Example: RW56X for diameter 1200.0 mm.
TSS Article No.: RW56X1200 - M12N.

Table LVII Installation dimensions / TSS Part No.

Rod	Groove Dia.	Groove Width	TSS Part No.	O-ring Sizes
d_N f8/h9	D_1 H9	L_1 +0.2		
3.0	7.9	2.2	RW5000030	4.47 x 1.78
4.0	**8.9**	**2.2**	**RW5000040**	**5.6 x 1.80**
5.0	**9.9**	**2.2**	**RW5000050**	**6.70 x 1.80**
6.0	**10.9**	**2.2**	**RW5000060**	**7.65 x 1.78**
8.0	**12.9**	**2.2**	**RW5000080**	**9.50 x 1.80**
8.0	**15.3**	**3.2**	**RW5100080**	**10.77 x 2.62**
10.0	**14.9**	**2.2**	**RW5000100**	**11.80 x 1.80**
10.0	**17.3**	**3.2**	**RW5100100**	**12.37 x 2.62**
12.0	**16.9**	**2.2**	**RW5000120**	**14.00 x 1.78**
12.0	**19.3**	**3.2**	**RW5100120**	**13.94 x 2.62**
14.0	**18.9**	**2.2**	**RW5000140**	**15.60 x 1.78**
14.0	**21.3**	**3.2**	**RW5100140**	**17.12 x 2.62**
15.0	19.9	2.2	RW5000150	17.17 x 1.78
15.0	22.3	3.2	RW5100150	17.12 x 2.62
16.0	20.9	2.2	RW5000160	17.17 x 1.78
16.0	**23.3**	**3.2**	**RW5100160**	**18.72 x 2.62**
18.0	22.9	2.2	RW5000180	20.35 x 1.78
18.0	**25.3**	3.2	**RW5100180**	**20.29 x 2.62**
20.0	**27.3**	**3.2**	**RW5100200**	**21.89 x 2.62**
20.0	**30.7**	**4.2**	**RW5200200**	**23.39 x 3.53**
22.0	**29.3**	**3.2**	**RW5100220**	**25.07 x 2.62**
22.0	**32.7**	**4.2**	**RW5200220**	**26.57 x 3.53**
25.0	**32.3**	**3.2**	**RW5100250**	**28.24 x 2.62**
25.0	**35.7**	**4.2**	**RW5200250**	**29.74 x 3.53**
28.0	35.3	3.2	RW5100280	29.82 x 2.62
28.0	**38.7**	**4.2**	**RW5200280**	**32.92 x 3.53**
30.0	37.3	3.2	RW5100300	32.99 x 2.62
30.0	40.7	4.2	RW5200300	34.52 x 3.53
32.0	39.3	3.2	RW5100320	34.59 x 2.62
32.0	**42.7**	**4.2**	**RW5200320**	**36.09 x 3.53**
35.0	42.3	3.2	RW5100350	37.77 x 2.62
35.0	45.7	4.2	RW5200350	37.69 x 3.53
36.0	43.3	3.2	RW5100360	39.34 x 2.62
36.0	**46.7**	**4.2**	**RW5200360**	**40.87 x 3.53**
40.0	**50.7**	**4.2**	**RW5200400**	**44.04 x 3.53**
40.0	**55.1**	**6.3**	**RW5300400**	**43.82 x 5.33**

Rod	Groove Dia.	Groove Width	TSS Part No.	O-ring Sizes
d_N f8/h9	D_1 H9	L_1 +0.2		
42.0	52.7	4.2	RW5200420	47.22 x 3.53
42.0	57.1	6.3	RW5300420	46.99 x 5.33
45.0	**55.7**	**4.2**	**RW5200450**	**50.39 x 3.53**
45.0	**60.1**	**6.3**	**RW5300450**	**50.17 x 5.33**
48.0	58.7	4.2	RW5200480	51.50 x 3.55
48.0	63.1	6.3	RW5300480	53.34 x 5.33
50.0	**60.7**	**4.2**	**RW5200500**	**53.57 x 3.53**
50.0	**65.1**	**6.3**	**RW5300500**	**56.52 x 5.33**
52.0	62.7	4.2	RW5200520	56.74 x 3.53
52.0	67.1	6.3	RW5300520	56.52 x 5.33
55.0	65.7	4.2	RW5200550	59.92 x 3.53
55.0	70.1	6.3	RW5300550	59.69 x 5.33
56.0	**66.7**	**4.2**	**RW5200560**	**59.92 x 3.53**
56.0	**71.1**	**6.3**	**RW5300560**	**62.87 x 5.33**
60.0	70.7	4.2	RW5200600	63.09 x 3.53
60.0	75.1	6.3	RW5300600	66.04 x 5.33
63.0	**73.7**	**4.2**	**RW5200630**	**66.27 x 3.53**
63.0	**78.1**	**6.3**	**RW5300630**	**69.22 x 5.33**
65.0	80.1	6.3	RW5300650	69.22 x 5.33
70.0	80.7	4.2	RW5200700	75.79 x 3.53
70.0	**85.1**	**6.3**	**RW5300700**	**75.57 x 5.33**
75.0	85.7	4.2	RW5200750	78.97 x 3.53
75.0	90.1	6.3	RW5300750	81.92 x 5.33
80.0	90.7	4.2	RW5200800	85.32 x 3.53
80.0	**95.1**	**6.3**	**RW5300800**	**85.09 x 5.33**
85.0	100.1	6.3	RW5300850	91.44 x 5.33
90.0	100.7	4.2	RW5200900	94.84 x 3.53
90.0	**105.1**	**6.3**	**RW5300900**	**94.62 x 5.33**
95.0	105.7	4.2	RW5200950	101.19 x 3.53
95.0	110.1	6.3	RW5300950	100.97 x 5.33
100.0	110.7	4.2	RW5201000	104.37 x 3.53
100.0	**115.1**	**6.3**	**RW5301000**	**107.32 x 5.33**
105.0	115.7	4.2	RW5201050	110.72 x 3.53
105.0	120.1	6.3	RW5301050	110.49 x 5.33
110.0	120.7	4.2	RW5201100	113.89 x 3.53
110.0	**125.1**	**6.3**	**RW5301100**	**116.84 x 5.33**

Rod	Groove Dia.	Groove Width	TSS Part No.	O-ring Sizes
d_N f8/h9	D_1 H9	L_1 +0.2		
110.0	130.5	8.1	RW5401100	120.02 x 7.00
115.0	125.7	4.2	RW5201150	120.24 x 3.53
115.0	130.1	6.3	RW5301150	120.02 x 5.33
120.0	130.7	4.2	RW5201200	123.42 x 3.53
120.0	135.1	6.3	RW5301200	126.37 x 5.33
125.0	135.7	4.2	RW5201250	129.77 x 3.53
125.0	**140.1**	**6.3**	**RW5301250**	**129.54 x 5.33**
130.0	140.7	4.2	RW5201300	136.12 x 3.53
130.0	145.1	6.3	RW5301300	135.89 x 5.33
135.0	145.7	4.2	RW5201350	139.29 x 3.53
135.0	150.1	6.3	RW5301350	142.24 x 5.33
140.0	150.7	4.2	RW5201400	145.64 x 3.53
140.0	**155.1**	**6.3**	**RW5301400**	**145.42 x 5.33**
145.0	155.7	4.2	RW5201450	148.82 x 3.53
145.0	160.1	6.3	RW5301450	151.77 x 5.33
150.0	165.1	6.3	RW5301500	158.12 x 5.33
160.0	**175.1**	**6.3**	**RW5301600**	**164.47 x 5.33**
160.0	**180.5**	**8.1**	**RW5401600**	**170.82 x 7.00**
165.0	180.1	6.3	RW5301650	170.82 x 5.33
170.0	180.7	4.2	RW5201700	177.39 x 3.53
170.0	185.1	6.3	RW5301700	177.17 x 5.33
175.0	190.1	6.3	RW5301750	183.52 x 5.33
180.0	190.7	4.2	RW5201800	183.74 x 3.53
180.0	**195.1**	**6.3**	**RW5301800**	**183.52 x 5.33**
180.0	**200.5**	**8.1**	**RW5401800**	**189.87 x 7.00**
190.0	200.7	4.2	RW5201900	196.44 x 3.53
190.0	205.1	6.3	RW5301900	196.22 x 5.33
200.0	215.1	6.3	RW5302000	208.92 x 5.33
200.0	**220.5**	**8.1**	**RW5402000**	**208.92 x 7.00**
210.0	225.1	6.3	RW5302100	215.27 x 5.33
220.0	235.1	6.3	RW5302200	227.97 x 5.33
220.0	**240.5**	**8.1**	**RW5402200**	**227.97 x 7.00**
230.0	245.1	6.3	RW5302300	234.32 x 5.33
230.0	250.5	8.1	RW5402300	240.67 x 7.00
240.0	255.1	6.3	RW5302400	247.02 x 5.33
240.0	260.5	8.1	RW5402400	253.37 x 7.00

Rod	Groove Dia.	Groove Width	TSS Part No.	O-ring Sizes
d_N f8/h9	D_1 H9	L_1 +0.2		
250.0	**270.5**	**8.1**	**RW5402500**	**266.07 x 7.00**
260.0	284.0	8.1	RW5802600	266.07 x 7.00
270.0	290.5	8.1	RW5402700	278.77 x 7.00
270.0	294.0	8.1	RW5802700	278.77 x 7.00
280.0	300.5	8.1	RW5402800	291.47 x 7.00
280.0	**304.0**	**8.1**	**RW5802800**	**291.47 x 7.00**
300.0	324.0	8.1	RW5803000	316.87 x 7.00
320.0	**344.0**	**8.1**	**RW5803200**	**329.57 x 7.00**
350.0	370.5	8.1	RW5403500	354.97 x 7.00
350.0	374.0	8.1	RW5803500	367.67 x 7.00
360.0	**384.0**	**8.1**	**RW5803600**	**367.67 x 7.00**
400.0	420.5	8.1	RW5404000	417.96 x 7.00
400.0	424.0	8.1	RW5804000	417.96 x 7.00
450.0	474.0	8.1	RW5804500	468.76 x 7.00
500.0	524.0	8.1	RW5805000	506.86 x 7.00
550.0	574.0	8.1	RW5805500	557.66 x 7.00
600.0	624.0	8.1	RW5806000	608.08 x 7.00
650.0	677.3	9.5	RW5506500	663 x 8.40
700.0	724.0	8.1	RW5807000	712 x 7.00
800.0	827.3	9.5	RW5508000	813 x 8.40
900.0	927.3	9.5	RW5509000	913 x 8.40
1000.0	1027.3	9.5	RW55X1000	1013 x 8.40
1000.0	1038.0	13.8	RW56X1000	1016 x 12.00
1100.0	1138.0	13.8	RW56X1100	1116 x 12.00
1200.0	1227.3	9.5	RW55X1200	1213 x 8.40
1200.0	1238.0	13.8	RW56X1200	1216 x 12.00
1300.0	1338.0	13.8	RW56X1300	1316 x 12.00
1500.0	1538.0	13.8	RW56X1500	1516 x 12.00
2000.0	2038.0	13.8	RW56X2000	2016 x 12.00
2600.0	2638.0	13.8	RW56X2600	2616 x 12.00

The rod diameters in bold type are in accordance with the recommendations of ISO 3320.

Other dimensions and all intermediate sizes up to 2600 mm diameter including imperial (inch) sizes can be supplied.

All O-Rings with 12 mm cross section are delivered as special profilring.

Turcon® Double Delta®

Double Acting

Rubber Energized Plastic Faced Seal

For O-Ring Grooves

Material:
Turcon® and Elastomer

Turcon® Double Delta®

Description

Turcon® Double Delta® is an rubber energised plastic faced seal. The seal is designed to expand and improve the service parameters of O-Rings and is installed in existing O-Ring grooves.

Double Delta® combines the flexibility and response of O-Rings with the wear and friction characteristics of the Turcon® materials in dynamic applications.

The figures below shows the cross section of the Double Delta®.

The double acting performance of the seal follows from the symmetrical cross section which allow the seal to respond to pressure in both directions.

Initial contact pressure is provided by radial compression of the O-Ring. When the system pressure is increased the O-Ring transforms this into additional contact pressure, the contact pressure of the seal is thereby automatically adjusted so sealing is ensured under all service conditions.

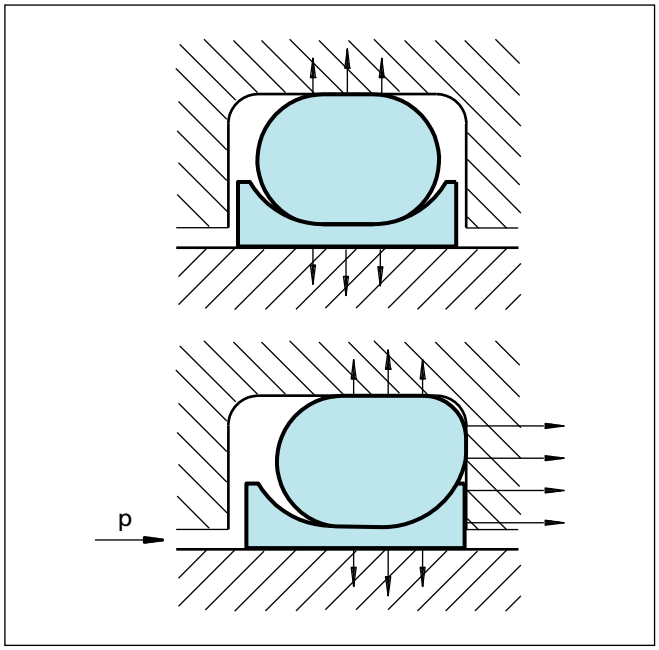

Figure 77 Turcon® Double Delta® without and with pressure

Notches

Turcon® Double Delta® is as standard supplied without radial notches, as the thin radial section of the seal gives good response to pressure variations.

For diameters from 2 mm notches on both sides are optional. These ensure direct pressurizing of the seal under all operating conditions.

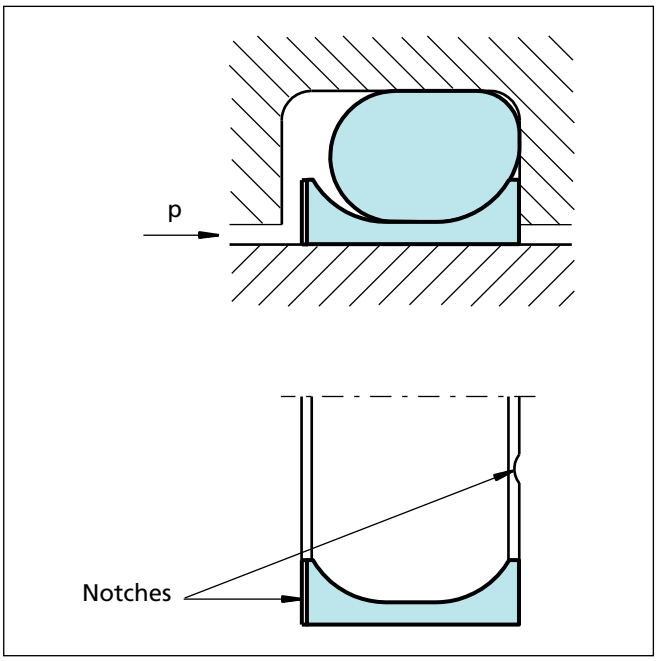

Figure 78 Turcon® Double Delta® with notches

Advantages

- Compact groove dimensions and simple installation
- Low friction without stick-slip
- Resistance against wear and extrusion
- Rod seals available for all diameters from 2 to 999.9 mm
- Standard cross sections cover AS 568A and important metric O-Rings, other cross sections available on request.
- Fits also groove dimensions per MIL-G-5514F

Application Examples

The Turcon® Double Delta® is preferably used as a double acting seal for hydraulic and pneumatic equipment in sectors such as:

- Machine tools
- Handling devices
- Manipulators
- Valves
- Chemical process equipments

It is particular recommended for light duty and small diameter applications.

Technical Data

Operating conditions

Pressure:	Up to 35 MPa
Velocity:	Up to 15 m/s
Temperature:	-45 °C to +200 °C (according to O-Ring material)
Media:	Mineral oil-based hydraulic fluids, flame retardant hydraulic fluids, environmentally safe hydraulic fluids (bio-oils), phosphate ester, water and others, depending on the O-Ring material compatibility (see Table LVIII)
Clearance:	The maximum permissible radial clearance Smax is shown in Table LIX, as a function of the operating pressure and functional diameter.

Important Note:
The above data are maximum values and cannot be used at the same time. e.g. the maximum operating speed depends on material type, pressure, temperature and gap value.
Temperature range also dependent on medium.

Materials

The following material combinations have proven effective for hydraulic applications:

All round material for hydraulic applications with reciprocating, short stroke or helical movements in mineral oils, flame retardant hydraulic fluids HFC, phosphate ester, bio-oils or fluids having less satisfactory lubricating properties:

Turcon® Double Delta ®:	Turcon® M12	
O-Ring:	NBR, 70 Shore A	N
	FKM, 70 Shore A	V
	EPDM, 70 Shore A	E
Set code:	M12N, M12V or M12E	

For medium to heavy applications with reciprocating movements in mineral oils and other media with good lubrication:

Turcon® Double Delta®:	Turcon® T46	
O-Ring:	NBR, 70 Shore A	N
	FKM, 70 Shore A	V
Set code:	T46N or T46V	

For specific applications, all Turcon® materials are available. Other viable material combinations are listed in Table LVIII.

Table LVIII Turcon® and Zurcon® Materials for Turcon® Double Delta®

Material, Applications, Properties	Code	O–Ring Material Shore A	Code	O-Ring Operating Temp.*°C	Mating Surface Material	MPa max. Dyna-mic
Turcon® M12 First material choice for seals in linear motion Overall improved properties For new constructions and updating For all commonly applpied hydraulic fluids including fluids with low lubrication performance Lowest friction and best sliding properties Lowest wear on seals Improved absorption of abrasive contaminants No wear or abrasion of counter surface Mineral fibre and Additives filled Colour: Dark grey	M12	NBR- 70	N	-30 to +100	Steel Steel hardened Steel chrome plated (rod Steel plated (rod) Cast iron Stainless Steel Titanium	35
		NBR- 70 Low temp.	T	-45 to +80		
		FKM- 70	V	-10 to +200		
Turcon® T05 For lubricating fluids Also for gas service Very low friction Very good sliding and sealing properties Colour: Turquoise	T05	NBR- 70	N	-30 to +100	Steel Steel hardened Steel chrome plated (rod)	20
		NBR- 70 Low temp.	T	-45 to +80		
		FKM- 70	V	-10 to +200		
Turcon® T24 For lubricating and non-lubricating hydraulic fluids Good sealing function Moderate extrusion resistance Carbon filled Colour: Black	T24	NBR- 70	N	-30 to +100	Steel Steel hardened Steel chrome plated (rod) Cast iron Stainless steel Aluminium	25
		NBR- 70 Low temp.	T	-45 to +80		
		FKM- 70	V	-10 to +200		
		EPDM- 70	E**	-45 to+145		
Turcon® T46 For lubricated hydraulics in linear motion High compressive strength High extrusion resistance Very good sliding and wear properties BAM tested Bronze filled Colour: Light to dark brown, which may have variations in shading	T46	NBR- 70	N	-30 to +100	Steel hardened Steel chrome plated (rod) Cast iron	35
		NBR-70 Low temp.	T	-45 to +80		
		FKM- 70	V	-10 to +200		
Zurcon® Z80 For lubricating and non-lubricating fluids Water based fluids, air and gases Dry air pneumatics High abrasion and extrusion resistance For service in abrasive conditions and media with particles Good chemical resistance Limited temperature capability (-60 to +80 °C) UHMWPE (Ultra High Molecular Weight PE) Colour: White to off-white	Z80	NBR- 70	N	-30 to (+100)	Steel Steel hardened Steel chrome plated (rod) Stainless steel Aluminium Ceramic coating	30
		NBR- 70 Low temp.	T	-45 to +80		
		EPDM- 70	E**	-45 to(+145)		

* The O-Ring Operation Temperature is only valid in mineral hydraulic oil (except EPDM). ** Material not suitable for mineral oils.
BAM: Tested by "Bundesanstalt Materialprüfung, Germany". Highlighted materials are standard.

■ Installation Recommendation

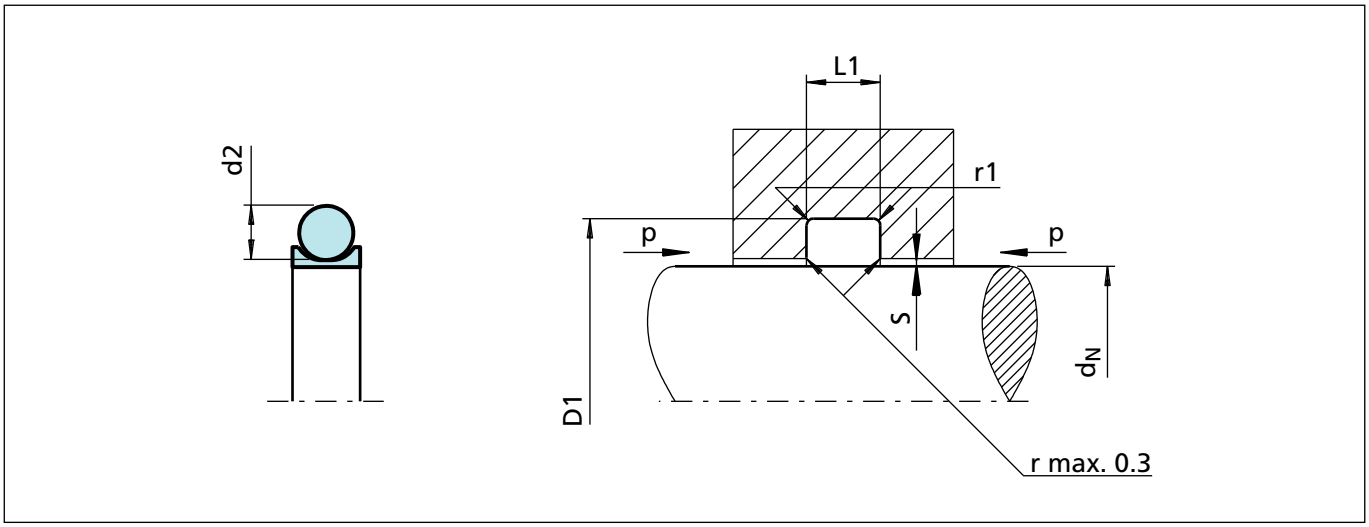

Figure 79 Installation drawing

Table LIX Installation dimensions

Series No.	Rod Diameter d_N f8/h9		Groove Diameter	Groove Width	Radius	Radial Clearance S max.				O-Ring Cross-Section
	Standard Range	Extended Range	D_1 H9	L_1 +0.2	r_1	2 MPa	10 MPa	20 MPa	35 MPa	d_2
RDD0	4 - 9.9	2 - 129.9	d_N+2.9	2.4	0.4	0.10	0.10	0.08	0.05	1.78
RDD1	10 - 19.9	5 - 249.9	d_N+4.5	3.6	0.4	0.15	0.15	0.10	0.07	2.62
RDD2	20 - 39.9	5 - 449.9	d_N+6.2	4.8	0.6	0.25	0.20	0.15	0.08	3.53
RDD3	40 - 119.9	12 - 649.9	d_N+9.4	7.1	0.8	0.35	0.25	0.20	0.10	5.33
RDD4	120 - 649.9	60 - 999.9	d_N+12.2	9.5	0.8	0.50	0.30	0.25	0.15	7.00
RDD5	650 - 999.9	110 - 999.9	d_N+15.0	10.0	1.0	0.60	0.40	0.30	0.20	8.40

TSS Slydring®/Wear Rings are not applicable at very small radial clearance; consult the Slydring® catalog.

Ordering example

Turcon® Double Delta®, complete with O-Ring, standard range, series RDD3 (from Table LIX),
Rod diameter: d_N = 80.0 mm
TSS Part No.: RDD300800 (from Table LX)

Select the material from Table LVIII. The corresponding code numbers are appended to the TSS Part No. (from Table LX). Together they form the TSS Article No. For all intermediate sizes not shown in Table LX, the TSS Article No. can be determined from the example opposite.

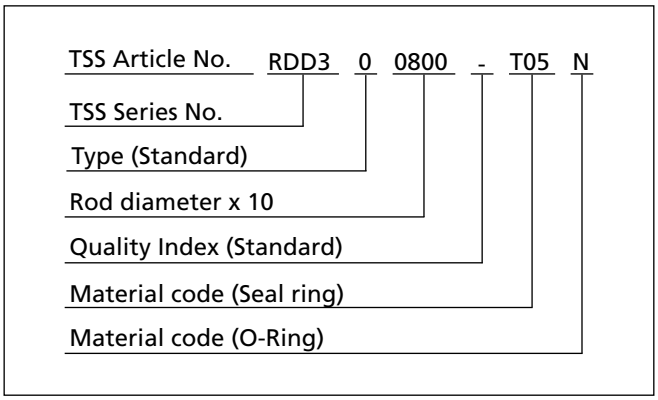

* Ordering Double Delta® with radial notches, replace "0" in the fifth character with "N".

Table LX Installation dimensions/TSS Part No.

Rod Diameter d_N h9	Groove Diameter D_1 H9	Groove Width L_1 +0.2	TSS Part No.	O-Ring Size
3.0	5.9	2.4	RDD000030	2.90 x 1.78
4.0	**6.9**	**2.4**	**RDD000040**	**3.68 x 1.78**
5.0	**7.9**	**2.4**	**RDD000050**	**4.87 x 1.80**
6.0	**8.9**	**2.4**	**RDD000060**	**6.07 x 1.78**
8.0	**10.9**	**2.4**	**RDD000080**	**7.65 x 1.78**
10.0	**14.5**	**3.6**	**RDD100100**	**10.77 x 2.62**
12.0	**16.5**	**3.6**	**RDD100120**	**12.37 x 2.62**
14.0	**18.5**	**3.6**	**RDD100140**	**13.94 x 2.62**
15.0	19.5	3.6	RDD100150	15.0 x 2.65
16.0	**20.5**	**3.6**	**RDD100160**	**17.12 x 2.62**
18.0	**22.5**	**3.6**	**RDD100180**	**18.72 x 2.62**
20.0	**26.2**	**4.8**	**RDD200200**	**20.22 x 3.53**
22.0	**28.2**	**4.8**	**RDD200220**	**21.82 x 3.53**
25.0	**31.2**	**4.8**	**RDD200250**	**25.00 x 3.53**
28.0	**34.2**	**4.8**	**RDD200280**	**28.17 x 3.53**
30.0	36.2	4.8	RDD200300	31.35 x 3.53
32.0	**38.2**	**4.8**	**RDD200320**	**32.92 x 3.53**
35.0	41.2	4.8	RDD200350	36.09 x 3.53
36.0	**42.2**	**4.8**	**RDD200360**	**36.09 x 3.53**
40.0	**49.4**	**7.1**	**RDD300400**	**40.64 x 5.33**
42.0	51.4	7.1	RDD300420	43.82 x 5.33
45.0	**54.4**	**7.1**	**RDD300450**	**46.99 x 5.33**
48.0	57.4	7.1	RDD300480	46.99 x 5.33
50.0	**59.4**	**7.1**	**RDD300500**	**50.17 x 5.33**
52.0	61.4	7.1	RDD300520	53.34 x 5.33
55.0	64.4	7.1	RDD300550	56.52 x 5.33
56.0	**65.4**	**7.1**	**RDD300560**	**56.52 x 5.33**
60.0	69.4	7.1	RDD300600	59.69 x 5.33
63.0	**72.4**	**7.1**	**RDD300630**	**62.87 x 5.33**
65.0	74.4	7.1	RDD300650	66.04 x 5.33
70.0	**79.4**	**7.1**	**RDD300700**	**72.39 x 5.33**
80.0	**89.4**	**7.1**	**RDD300800**	**81.92 x 5.33**
85.0	94.4	7.1	RDD300850	85.09 x 5.33
90.0	**99.4**	**7.1**	**RDD300900**	**91.44 x 5.33**
95.0	104.4	7.1	RDD300950	97.79 x 5.33
100.0	**109.4**	**7.1**	**RDD301000**	**100.97 x 5.33**

Rod Diameter d_N h9	Groove Diameter D_1 H9	Groove Width L_1 +0.2	TSS Part No.	O-Ring Size
105.0	114.4	7.1	RDD301050	107.32 x 5.33
110.0	**119.4**	**7.1**	**RDD301100**	**110.49 x 5.33**
115.0	124.4	7.1	RDD301150	116.84 x 5.33
120.0	132.2	9.5	RDD401200	120.02 x 7.0
125.0	**137.2**	**9.5**	**RDD401250**	**126.37 x 7.0**
130.0	142.2	9.5	RDD401300	132.72 x 7.0
135.0	147.2	9.5	RDD401350	135.89 x 7.0
140.0	**152.2**	**9.5**	**RDD401400**	**142.24 x 7.0**
150.0	162.2	9.5	RDD401500	151.77 x 7.0
160.0	**172.2**	**9.5**	**RDD401600**	**164.47 x 7.0**
170.0	182.2	9.5	RDD401700	170.82 x 7.0
180.0	**192.2**	9.5	**RDD401800**	**183.52 x 7.0**
190.0	202.2	9.5	RDD401900	189.87 x 7.0
200.0	**212.2**	**9.5**	**RDD402000**	**202.57 x 7.0**
210.0	222.2	9.5	RDD402100	215.27 x 7.0
220.0	**232.2**	**9.5**	**RDD402200**	**227.97 x 7.0**
230.0	242.2	9.5	RDD402300	227.97 x 7.0
240.0	252.2	9.5	RDD402400	240.67 x 7.0
250.0	**262.2**	**9.5**	**RDD402500**	**253.37 x 7.0**
280.0	**292.2**	**9.5**	**RDD402800**	**291.47 x 7.0**
300.0	312.2	9.5	**RDD403000**	304.17 x 7.0
320.0	**332.2**	**9.5**	**RDD403200**	**329.57 x 7.0**
350.0	362.2	9.5	RDD403500	354.97 x 7.0
360.0	**372.2**	**9.5**	**RDD403600**	**367.67 x 7.0**
400.0	412.2	9.5	RDD404000	405.26 x 7.0
500.0	521.2	9.5	RDD405000	506.86 x 7.0
600.0	621.2	9.5	RDD406000	608.08 x 7.0
650.0	665.0	10.0	RDD506500	650.0 x 8.4
700.0	815.0	10.0	RDD507000	700.0 x 8.4
800.0	815.0	10.0	RDD508000	800.0 x 8.4
900.0	915.0	10.0	RDD509000	900.0 x 8.4
950.0	965.0	10.0	RDD509500	950.0 x 9.4

The rod diameters in **bold** type correspond to the recommendations of ISO 3320.
TSS Part No. for other dimensions and **all** intermediate sizes up to 999.9 mm diameter including imperial (inch) sizes can be supplied. Larger sizes up to 2600 mm available upon request.

■ Special Turcon® Double Delta®

Turcon® Double Delta® for one Back-up Ring grooves

Double Delta® is available for designs where grooves for O-Ring with one Back-up Ring are used according to Table LXI.

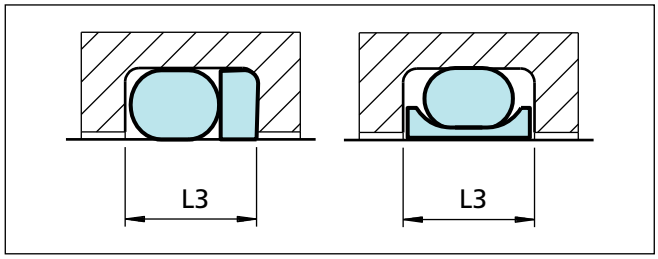

Figure 80 Groove width

Ordering Example

Double Delta® complete with NBR O-Ring
Rod diameter: d_N = 80.0 mm
Groove diameter: 89.4 mm
Groove width: 8.5 mm.
TSS Article No.:. RDA300800-M12N

* From Table LXI or Table LXII
** FromTable LVIII
*** From Table LVIII
[1] N for seals with notches, available from dia. 8 mm

Table LXI Seals for one Back-up Ring groove

Series No.	Groove Width	Execution Mark 5th digit		O-Ring Cross Section
	L_3	Without Notch	With Notch*	d_2
RDA0	3.80	0	N	1.78
RDA1	4.65	0	N	2.62
RDA2	5.70	0	N	3.53
RDA3	8.50	0	N	5.33
RDA4	11.20	0	N	7.00
RDA5	12.50	0	N	8.40

* Available for diameters from 8 mm

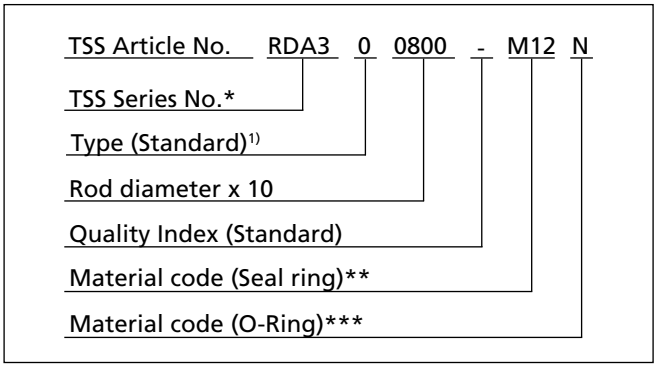

Turcon® Double Delta® for Metric O-Rings

Double Delta® is available for installation in grooves for metric O-Rings as listed in Table LXII.

Table LXII Rod Seals for Metric O-Ring Grooves

O-Ring Cross-Section	Groove Diameter	Groove Width	Series No.	Execution Mark 5th digit		Available Range
d_2	D_1 H9	L_1 +0.2		Standard	Notch*	
2.0	d_N + 3.3	2.7	RD2A	0	N	3 -100.0
2.4	d_N + 4.1	3.2	RD2E	0	N	5 -160.0
2.5	d_N + 4.3	3.3	RD2F	0	N	5 -160.0
3.0	d_N + 5.2	4.0	RD3A	0	N	6 -200.0
4.0	d_N + 7.0	5.2	RD4A	0	N	8 -300.0
5.0	d_N + 8.8	6.6	RD5A	0	N	12 -400.0
5.7	d_N + 10.0	7.2	RD5H	0	N	12 -649.9

* Available for diameters from 8 mm

Non Standard Seals

Available upon Request

Old Series

Special Series

Polypac® VA

Seal for high pressure volumetric water pump. It's made with a special grade NBR+FABRIC. High sealing efficiency and wear resistance.

Diameter Range mm	Pressure Range MPa	Temperature Range °C	Velocity m/s
15 - 70	Up to 40	Up to +80	Up to 2

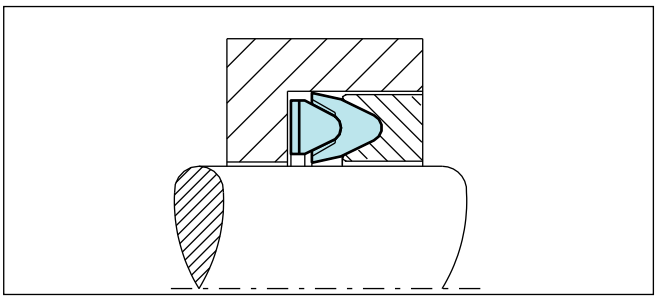

Polypac® VB

Seal for low pressure volumetric water pump. It's made with a NBR rubber gasket clamped on a softer NBR+FABRIC V-ring shape. These seals in combination with VA seals for high pressure improve the performance of the sealing system in high pressure water pump.

Diameter Range mm	Pressure Range MPa	Temperature Range °C	Velocity m/s
13 - 60	-	Up to +80	Up to 2

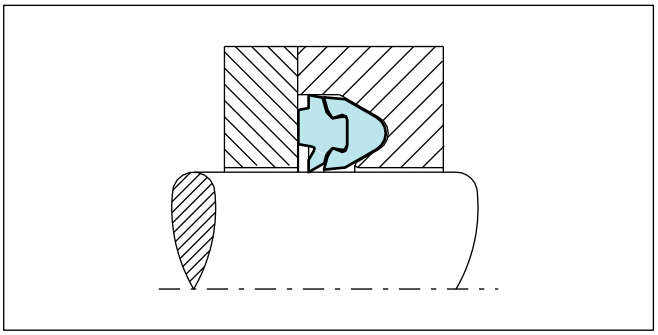

Polypac® DS - CX95 and DS/TE - CX95

The seals DS and DS/TE are designed to improve the water cleaning equipment's performance.

The special profile can withstand the frequent pressure variations, high temperatures and critical lubrication. The U shaped sealing element is made out of cotton fabric reinforced NBR and provide with a NBR energiser ring a good sealing performance at high as low pressure working condition. The version DS/TE with bronze filled PTFE back up ring permit to work at high pressure.

Diameter Range mm	Pressure Range MPa	Temperature Range °C	Velocity m/s
15 - 40	Up to 40 for DS/TE Up to 10 for DS	Up to +80	Up to 2

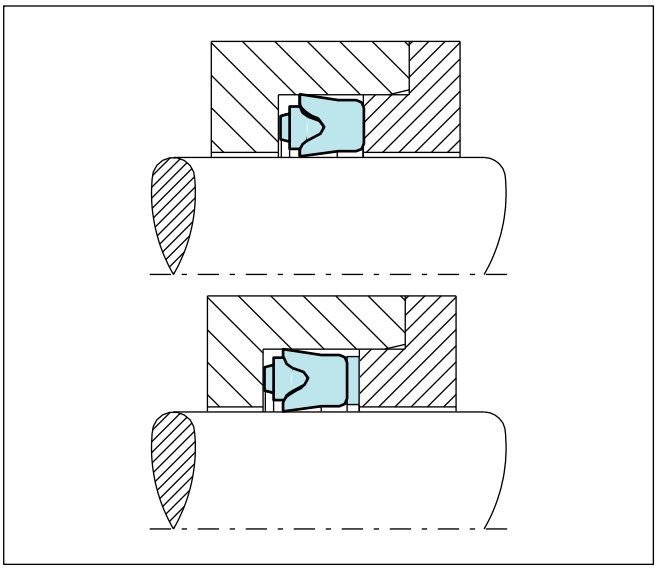

U-Cup RU0

Single lip U-Cup used as primarily seals for piston rods in hydraulic cylinders. U-Cups in polyurethane are proven elements, due to their good mechanical properties, for standard cylinder construction, particularly for mobile hydraulics under rough operating conditions.

Diameter Range mm	Pressure Range MPa	Temperature Range (Z20) °C	Velocity m/s
6 -280	Up to 40	-35 to +110	Up to 0.5

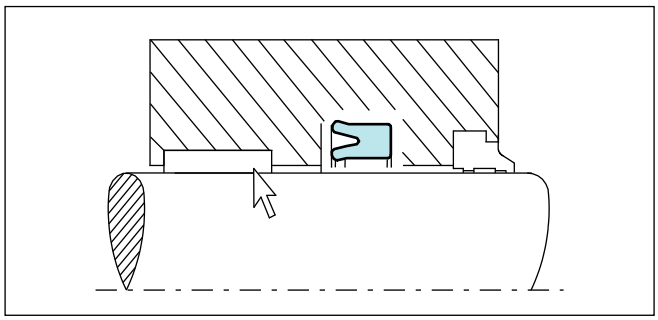

U-Cup RU3

Double lip U-Cup used as primarily seals for piston rods in hydraulic cylinders. U-Cups in polyurethane are proven elements, due to their good mechnical properties, for standard cylinder construction, particularily for mobile hydraulics under rough operating conditions.

Diameter Range mm	Pressure Range MPa	Temperature Range (Z20) °C	Velocity m/s
12 - 200	Up to 40	-35 to +110	Up to 0.5

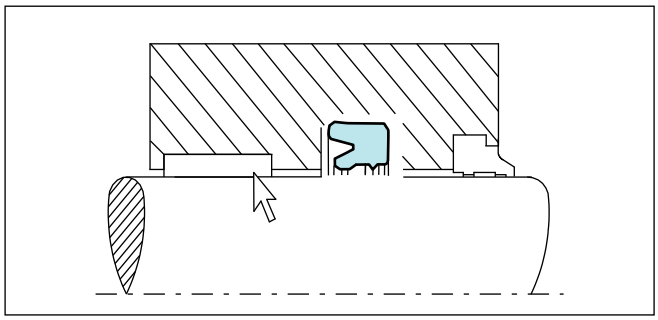

U-Cup RUB

These seals have a symmetrical configuration of the sealing lips and are mainly used in single acting or double acting standard hydraulic cylinders, particularily for mobile hydraulics under rough operating conditions.

Diameter Range mm	Pressure Range MPa	Temperature Range (Z20) °C	Velocity m/s
5 - 290	Up to 40	-35 to +110	Up to 0.5

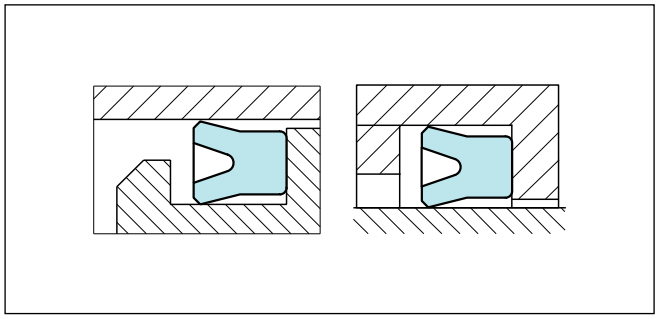

U-Cup RU1

Compact U-Cup of Zurcon® Polyurethane with only a dynamic sealing lip for small installation dimensions.

Diameter Range mm	Pressure Range MPa	Temperature Range (Z20) °C	Velocity m/s
10 - 170	Up to 40	-35 to +110	Up to 0.5

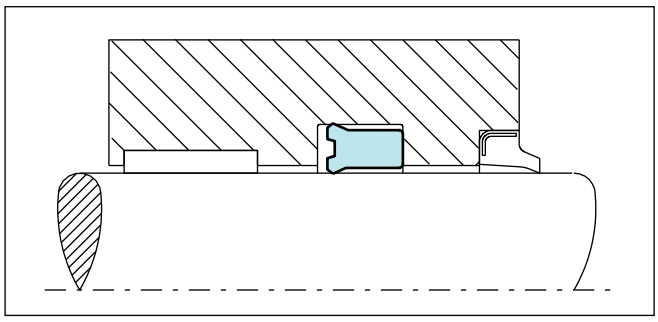

U-Cup RU2B

The compact U-Cup type RU2B is designed for small grooves. It is thus particularly suitable for use in space-saving designs. The compact form provides a high sealing effect even with low system pressures.

For larger gaps and high pressure peaks, the U-Cup RU2B has an integrated Back-up Ring.

Diameter Range mm	Pressure Range MPa	Temperature Range (Z20) °C	Velocity m/s
32 - 160	Up to 50	-35 to +110	Up to 0.5

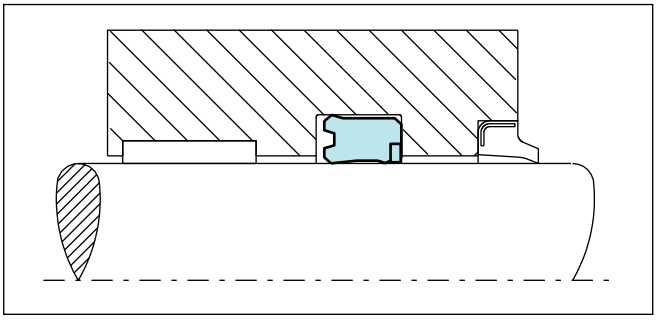

U-Cup RU3B

The U-Cup type RU3B is used as a rod seal for heavy-duty conditions in mobile and industrial hydraulics.

U-Cup RU3B has integrated Back-up Ring to prevent the seal material from extrusion at high temperatures and high peak pressures.

Diameter Range mm	Pressure Range MPa	Temperature Range (Z20) °C	Velocity m/s
40 - 171	Up to 50	-35 to +110	Up to 0.5

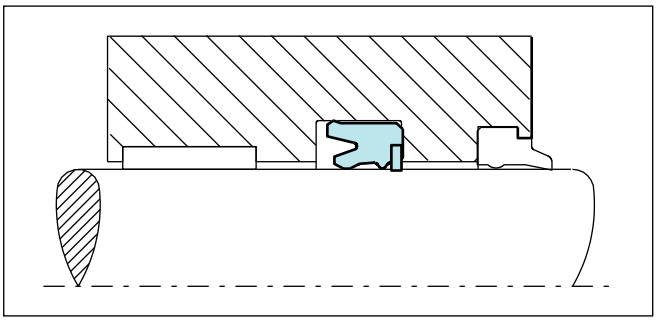

Turcon® Stepseal® 2A

Single acting primary seal for applications requiring stabilized seal position in the groove. A further development of Turcon® Stepseal® 2K by adding a stabilising edge, which prevents the seal from "tilting", cursed by seal-system pressure build-up between seals, in tandem configuration. It also increases assembly robustness through protection of the seal face during insertion of the rod.

Same high sealing properties as Stepseal® 2K.

Stepseal® 2A is used as primary seal in rod sealing systems preferably together with a secondary seal from the range of Turcon® and Zurcon® seals, a double acting Excluder® or Scraper.

Installation in the same grooves as Turcon® Stepseal® 2K and grooves according to ISO 7425/2.

Standard TSS Part Number is available

Diameter Range mm	Pressure Range MPa	Temperature Range °C	Velocity m/s
20 - 2600	60	-45 to +200	Up to15

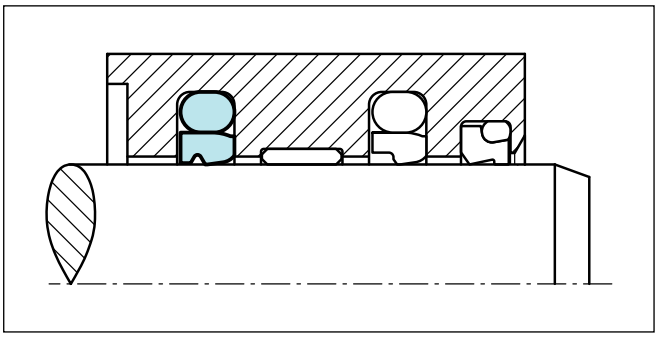

Turcon® Stepseal® 2A CR

Single acting rubber energized rod seal for dynamic applications. High sealing efficiency, low friction with no Stick-slip, minimal break out force and high wear resistance with integrated back up ring for higher pressures or bigger gaps.

Installation in the same grooves as Turcon® Stepseal® 2K and grooves according to ISO 7425/2.

Standard TSS Part Number is available

Diameter Range mm	Pressure Range MPa	Temperature Range °C	Velocity m/s
30 - 2600	100	-45 to +200	Up to 5

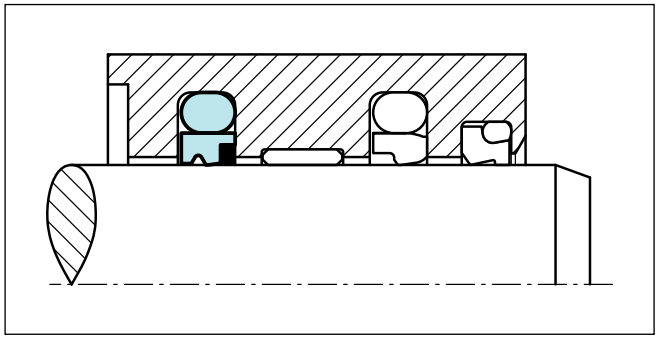

Turcon® Glyd Ring® CR

Double acting rubber energised rod seal for dynamic applications. Low friction with no Stick-slip, minimal break out force and high wear resistance with integrated Back-up Rings for higher pressures or larger gaps. Installation in grooves with dimensions according to ISO 7425 (the same as for Turcon® Glyd Ring® for piston).

Diameter Range mm	Pressure Range MPa	Temperature Range °C	Velocity m/s
30 - 2600	100	-45 to +200	5

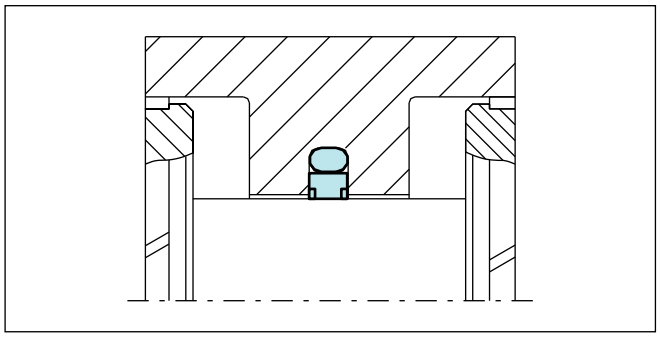

Turcon® AQ-Seal® 5

A further development of the standard Turcon® AQ-Seal® double acting seal for sealing between two media, e.g. fluid/gas separation by incorporating a limited footprint X-Ring® Seal elastomer in the dynamic sealing face. Energised by two O-rings to improve sealing behaviour. Same groove dimensions as Turcon® AQ-Seal® 5 for piston.

Diameter Range mm	Pressure Range MPa	Temperature Range °C	Velocity m/s
40 - 700	60	-45 to +200	3

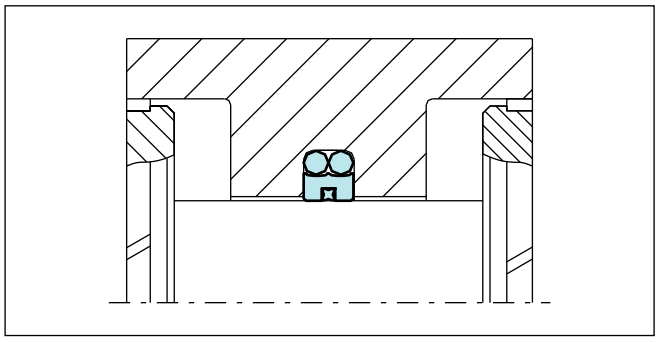

Turcon® AQ-Seal®

A double acting rubber energised seal development for sealing between two media, e.g. fluid/gas seperation by incorporating a limited footprint X-Ring® Seal inset into the dynamic sealing face. Installation in grooves according to ISO 7425 (the same as for Turcon® AQ-Seal® for piston).

Diameter Range mm	Pressure Range MPa	Temperature Range °C	Velocity m/s
16 - 2600	50	-45 to +200	2

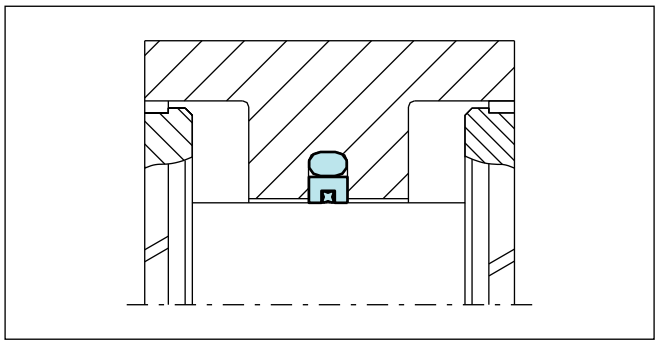

Turcon® Variseal® W

The Turcon® Variseal® W is a single acting rod seal energized by a special helical spring. The advantage of the Turcon®Variseal® W lies in its low friction and constant preloading force over a relatively large deformation range. The Turcon® Variseal® W is used wherever friction has to be kept within a narrow tolerance zone.

Diameter Range mm	Pressure Range MPa	Temperature Range °C	Velocity m/s
6 - 2600	45	-70 to +200	15

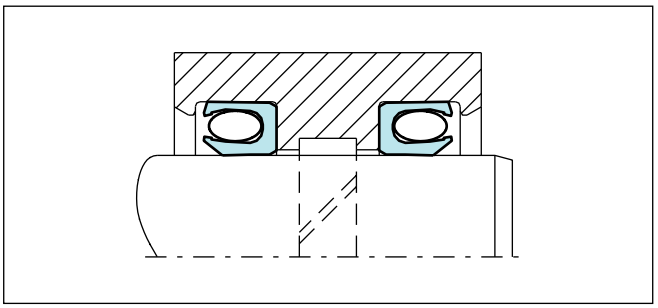

Turcon® Glyd Ring® Hz

Glyd Ring® Hz is a symmetric double-acting seal with a special design on the sealing area. In principle there are two Stepseals® face to face. The seal width is close to the groove to reduce axial movements. The Glyd Ring® Hz is for applications with short and high frequencies. Installation in grooves with dimensions according to ISO 7425 (the same as for Turcon® Glyd Ring® for piston).

Diameter Range mm	Pressure Range MPa	Temperature Range °C	Velocity m/s
8 - 2600	40	-45 to +200	15

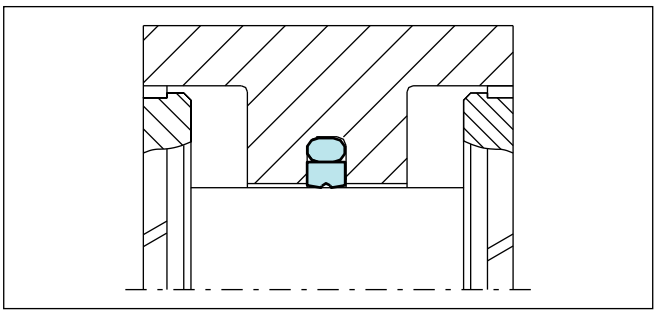

Turcon® Variseal® M2 CR

Single acting sealing element comprising a U-shaped Turcon® ring and stainless energising finger spring. Low friction with no Stick-slip, minimal break out force and high wear resistance. Resistant to most liquids and chemical. Unlimited shelf life. For higher pressure applications or Larger extrusion gaps the Variseal® M2 CR has an integrated Back-up Ring in material Zurcon® Z43.

Diameter Range mm	Pressure Range MPa	Temperature Range °C	Velocity m/s
8 - 300	100	-30 to +260	15

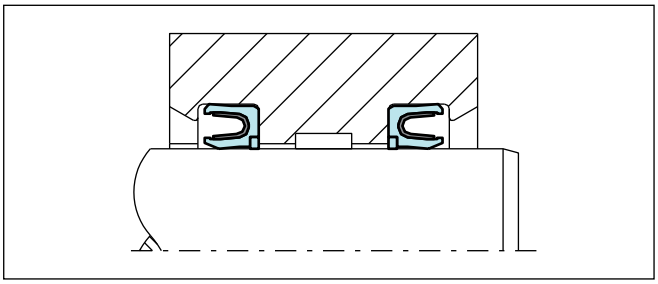

Captive Turcon® Glyd Ring®

A seal for special applications where the Glyd Ring® has to slide across dimensional changes (e.g. from a small diameter with sealing efficiency over the seal to a large diameter with no sealing efficiency or vice virsa).

Standard TSS Part Number is available

Diameter Range mm	Pressure Range MPa	Temperature Range °C	Velocity m/s
6 - 2600	60	-45 to +200	Up to 15

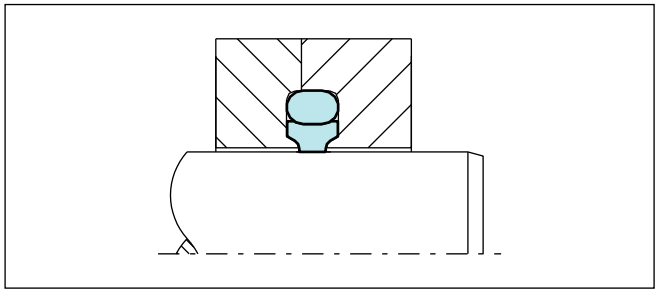

Turcon® Buffer Ring

Turcon® Buffer Ring is an uncut "Piston Ring". With notches on one side the Ring is a single acting seal often used as protector of a common rod sealing system against peak pressures where the notch prevents risk of pressure trap.

If a double acting sealing effect is required it is necessary to install two Buffer Rings, back to back, to take the pressure from both sides.

For linear, helical and rotary movements.

Standard TSS Part Number is available

Diameter Range mm	Pressure Range MPa	Temperature Range °C	Velocity m/s
4 - 2500	60	+30 to +160	Up to 15 (10 rotary)

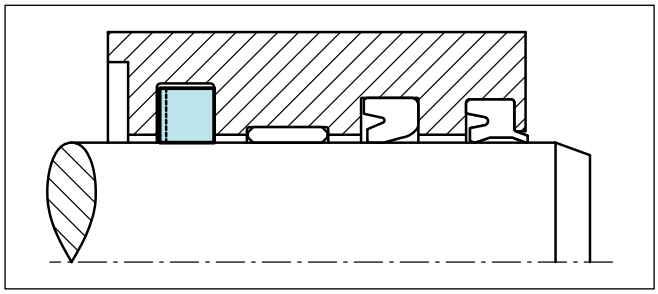

LOCAL CONTACTS

EUROPE

Austria – Vienna (Slovenia)
+43 (0) 1 406 47 33
Belgium - Dion-Valmont (Luxembourg)
+32 (0) 10 22 57 50
Bulgaria – Sofia
(Azerbaijan, Belarus, Greece, Romania, Ukraine)
+359 (0) 2 969 95 99
Croatia – Zagreb (Albania, Bosnia and Herzegovina, Macedonia, Serbia, Montenegro)
+385 (0) 1 24 56 387
Czech Republic - Rakovnik (Slovakia)
+420 313 529 111
Denmark – Copenhagen
+45 48 22 80 80
Finland – Vantaa (Estonia, Latvia)
+358 (0) 207 12 13 50
France - Maisons-Laffitte
+33 (0) 1 30 86 56 00

Germany - Stuttgart
+49 (0) 711 7864 0
Hungary – Budaörs
+36 (06) 23 50 21 21
Italy – Livorno
+39 0586 22 6111
The Netherlands - Rotterdam
+31 (0) 10 29 22 111
Norway – Oslo
+47 22 64 60 80
Poland – Warsaw (Lithuania)
+48 (0) 22 863 30 11
Russia – Moscow
+7 495 627 57 22
Spain – Madrid (Portugal)
+34 (0) 91 71057 30
Sweden – Jönköping
+46 (0) 36 34 15 00

Switzerland – Crissier
+41 (0) 21 631 41 11
Turkey – Istanbul
+90 216 569 73 00
United Kingdom - Solihull (Eire, South Africa)
+44 (0) 121 744 1221

Aerospace Hub Europe, North
(UK and Nordic Countries)
+44 (0) 121 744 1221
Aerospace Hub Europe, South & West
(Continental Europe and Middle East)
+33 (0) 1 30 86 56 00
Automotive Hub Europe
+49 (0) 711 7864 0

AMERICAS

Americas Regional
+1 260 749 9631
Brazil – São José dos Campos
+55 12 3932 7600
Canada Central – Etobicoke, ON
+1 416 213 9444
Canada East – Montreal, QC
+1 514 284 1114
Canada West – Langley, BC
+1 604 539 0098
Mexico - Mexico City
+52 55 57 19 50 05

USA, Great Lakes - Fort Wayne, IN
+1 260 482 4050
USA, East - Mt. Juliet, TN
+1 615 800 8340
USA, Midwest - Schaumburg, IL
+1 630 539 5500
USA, Northern California - Fresno, CA
+1 559 449 6070
USA, Northwest - Portland, OR
+1 503 595 6565
USA, Southwest - Houston, TX
+1 713 461 3495

Aerospace Hub Airframe
+1 303 469 1357
Aerospace Hub Distribution & Engineering
+1 260 749 9631
Aerospace Hub East
+1 610 828 3209
Aerospace Hub West
+1 310 371 1025
Automotive Hub North America
+1 734 354 1250
Automotive Hub South America
+55 12 3932 7600

ASIA PACIFIC

Asia Pacific Regional
+65 6 577 1778
China – Hong Kong
+852 2366 9165
China – Shanghai
+86 (0) 21 6145 1830
India – Bangalore
+91 (0) 80 3372 9000
Japan – Tokyo
+81 (0) 3 5633 8008
Korea – Seoul
+82 (0) 2 761 3471

Malaysia - Kuala Lumpur
+60 (0) 3 90549266
Taiwan – Taichung
+886 4 2382 8886
Vietnam – Ho Chi Minh City
+84 8 6288 6407
Singapore and all other countries in South and East Asia, Australasia
+65 6 577 1778

Aerospace Hub China
+86 (0) 21 6145 1830
Aerospace Hub Singapore
+65 6 577 1778
Automotive Hub China
+86 (0) 21 6145 1830
Automotive Hub India
+91 (0) 80 3372 9200

AFRICA, CENTRAL ASIA AND MIDDLE EAST

Africa & Iran (excluding South Africa (see UK))
+41 (0) 21 631 41 11

Central Asia (Armenia, Georgia, Kazakhstan, Kyrgyzstan, Tajikistan, Uzbekistan)
+7 495 627 57 22

Middle East and Gulf Region
+359 (0) 2 969 95 99

TRELLEBORG

Trelleborg is a world leader in engineered polymer solutions that seal, damp and protect critical applications in demanding environments. Its innovative engineered solutions accelerate performance for customers in a sustainable way. The Trelleborg Group has local presence in over 40 countries around the world.

facebook.com/TrelleborgSealingSolutions
twitter.com/TrelleborgSeals
youtube.com/TrelleborgSeals
flickr.com/TrelleborgSealingSolutions

WWW.TSS.TRELLEBORG.COM

99GBGOCATAE0111