Hydraulic seals – linear

PISTON SEALS

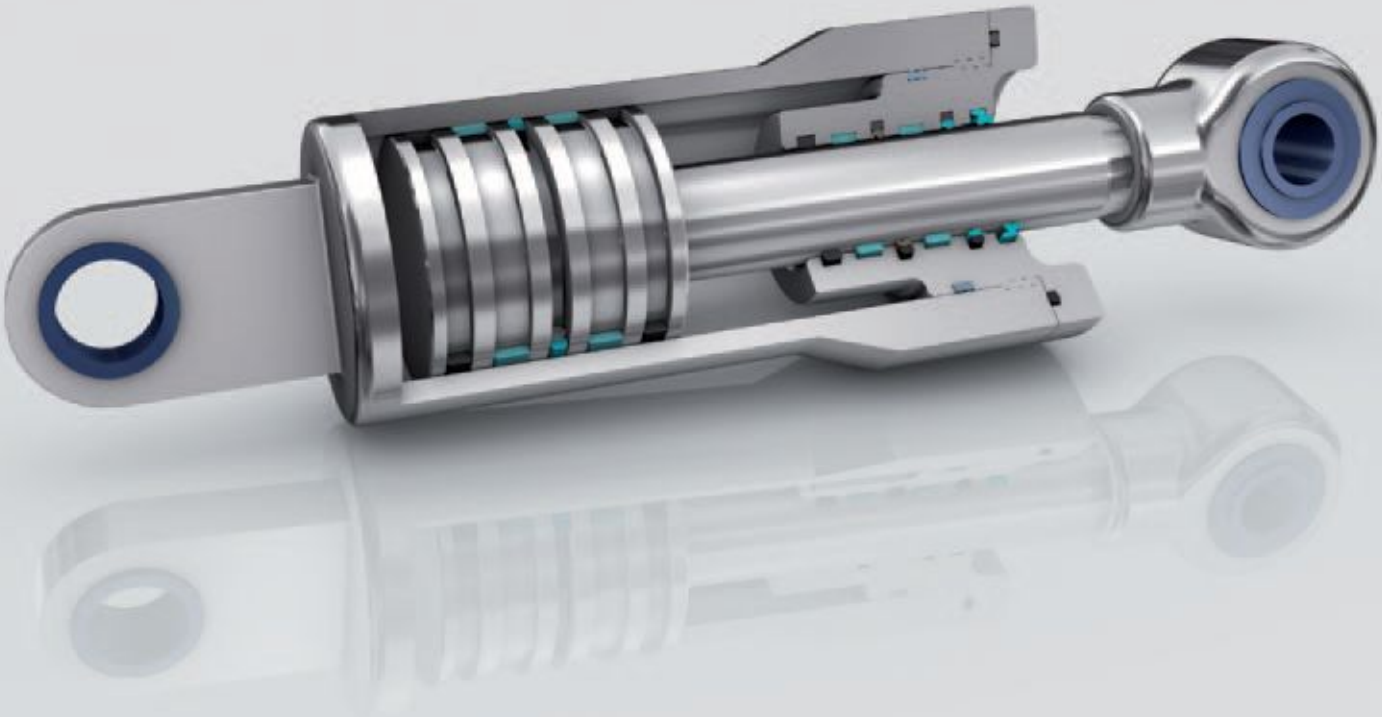

Your Partner for Sealing Technology

Trelleborg Sealing Solutions is a major international sealing force, uniquely placed to offer dedicated design and development from our market-leading product and material portfolio: a one-stop-shop providing the best in elastomer, thermoplastic, PTFE and composite technologies for applications in aerospace, industrial and automotive industries.

With 50 years of experience, Trelleborg Sealing Solutions engineers support customers with design, prototyping, production, test and installation using state-of-the-art design tools. An international network of over 70 facilities worldwide includes over 25 manufacturing sites, strategically-positioned research and development centers, including materials and development laboratories and locations specializing in design and applications.

Developing and formulating materials in-house, we utilize the resource of our material database, including over 2,000 proprietary compounds and a range of unique products.

Trelleborg Sealing Solutions fulfills challenging service requirements, supplying standard parts in volume or a single custom-manufactured component, through our integrated logistical support, which effectively delivers over 40,000 sealing products to customers worldwide.

Facilities are certified to ISO 9001:2008 and ISO/TS 16949:2009. Trelleborg Sealing Solutions is backed by the experiences and resources of one of the world's foremost experts in polymer technology: the Trelleborg Group.

ISO 9001:2008

ISO/TS 16949:2009

To obtain the best recommendation for a specific application, please contact your local Trelleborg Sealing Solutions marketing company.

This edition supersedes all previous brochures.

TRELLEBORG
SEALING SOLUTIONS

Introduction

The Trelleborg Group

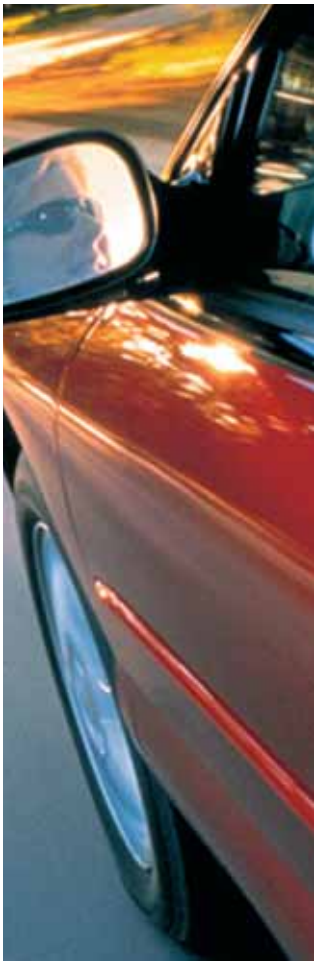

Automotive

- Antivibration Systems
- Noise and Vibration Dampening
- Fluid Systems

Wheel Systems

- Agricultural and Forestry Tires
- Industrial Tires

Engineered Systems

- Engineering Solutions
- Marine Fenders
- Industrial Fluid Control
- Sealing Profiles for Buildings
- Water Proofing
- Offshore

Sealing Solutions

- Precision seals for the Industrial, Automotive and Aerospace markets

Trelleborg Sealing Solutions

Food, Pharmaceutical and Chemical Processing

Machine Tools

Oil and Gas

Semiconductor

Automotive

Aerospace

Fluid power

Life Sciences

Off-Highway

We build long term partnerships with customers and suppliers by providing leading technology and excellent service

Renewable Energy

TRELLEBORG
SEALING SOLUTIONS

Global Resources

Americas

- 1 Research & Development Centers
- 13 Marketing Companies
- 1 Logistics Centers SCM
- 8 Manufacturing Sites

Worldwide

- 7 Research & Development Centers
- 43 Marketing Companies
- 4 Logistics Centers SCM
- 23 Manufacturing Sites

TRELLEBORG
SEALING SOLUTIONS

Global Resources

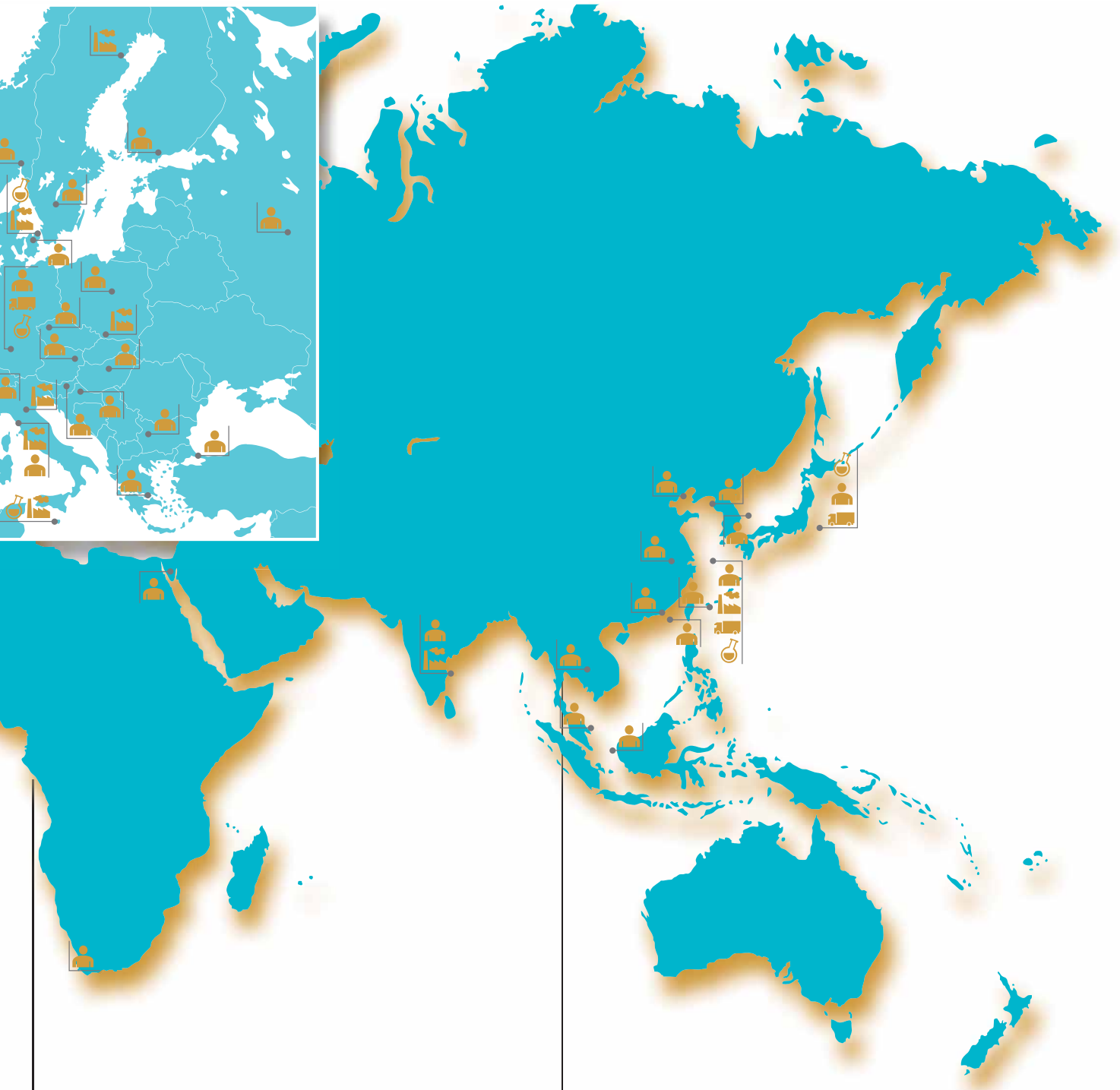

Europe

- 4 Research & Development Centers
- 19 Marketing Companies
- 1 Logistics Centers SCM
- 13 Manufacturing Sites

Asia

- 2 Research & Development Centers
- 11 Marketing Companies
- 2 Logistics Centers SCM
- 2 Manufacturing Sites

TRELLEBORG
SEALING SOLUTIONS

Mission Statement

Our Mission

We will be the supply partner of first choice within our chosen markets, working globally through our local teams. We will build long-term partnerships with customers and suppliers by providing leading technology and excellent service. We are determined to be different.

Sealing technology

Trelleborg Sealing Solutions offers an outstandingly comprehensive sealing portfolio – a one-stop shop providing the best in elastomer, thermoplastic, PTFE and composite technologies; our solutions are featured in virtually every application conceivable within the aerospace, automotive and industrial industries.

A worldwide presence

We are uniquely placed to offer a dedicated design and development service for sealing solutions, globally servicing, supporting and supplying our customers through an unrivalled international network.

- Over 70 facilities worldwide
- More than 20 manufacturing sites
- 7 strategically positioned materials and development laboratories
- Internationally linked design and application centers

Commitment - To customers' needs long-term

The aim of Trelleborg Sealing Solutions is to facilitate customers in the achievement of cost effective, durable solutions that match their specific business requirements and needs. We are one of the world's foremost experts in polymer sealing technology. We develop and manufacture market safety-critical polymer-based precision seals and associated systems.

TRELLEBORG
SEALING SOLUTIONS

Mission Statement

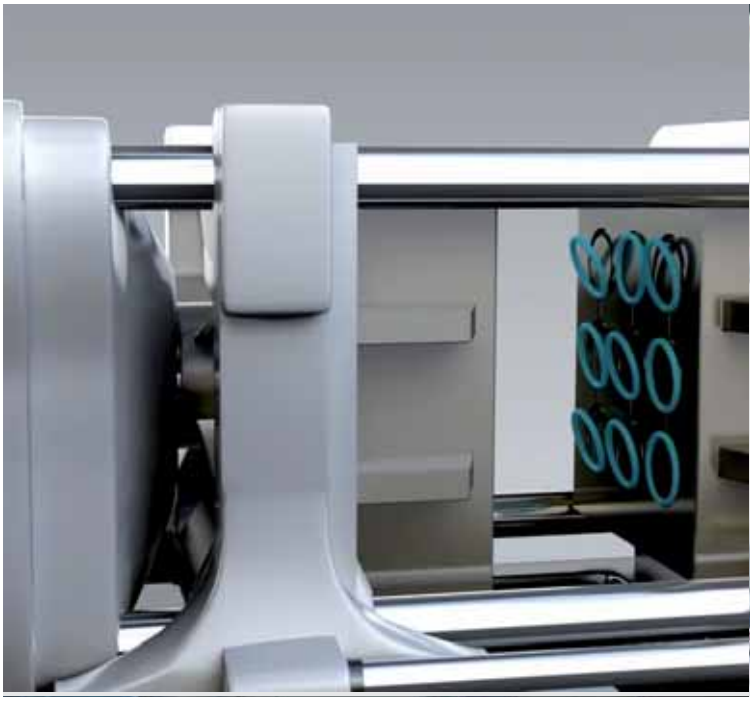

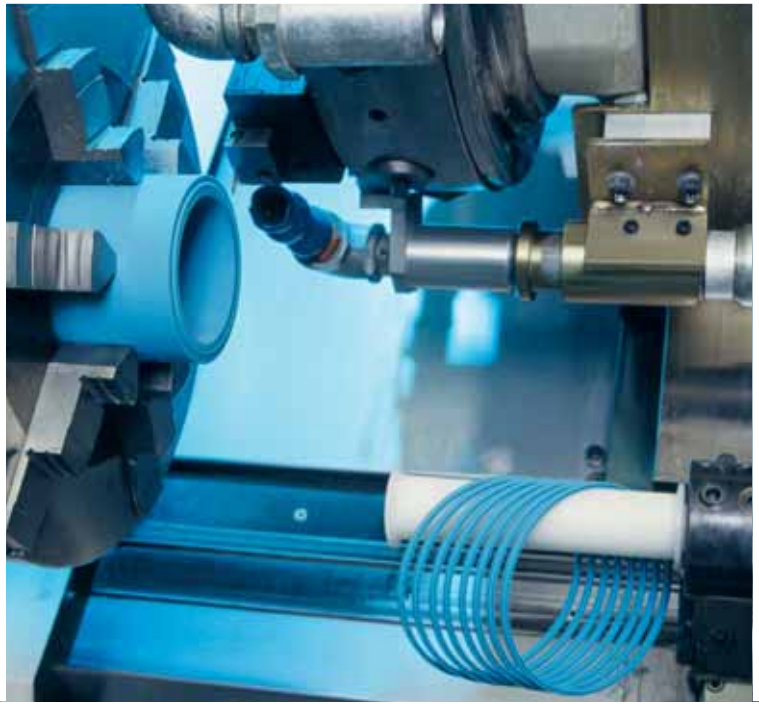

Latest information available at www.tss.trelleborg.com
Edition January 2011

TRELLEBORG
SEALING SOLUTIONS

Products, brands and materials

Our pioneering products

Trelleborg Sealing Solutions is pioneering within the sealing industry and continuously developing innovative products.

- Turcon® AQ Seal®
- D-A-S Compact Seal®
- Turcon® Double Delta®
- Turcon® Excluder®
- Turcon® Glyd Ring® T
- Turcon® Hatseal®
- Zurcon® L-Cup®
- Turcite® Slydring®
- Turcite® B-Slydway®
- Turcon® Stepseal® 2K
- Turcon® Stepseal® V
- V-Ring®
- Varilip®
- Turcon® Variseal®
- Turcon® VL-Seal™
- Turcon® Wedgpak®
- Wills Rings®
- Zurcon® Wynseal®

World renowned names united

We own many of the longest established and leading names within the seal industry. These include:

- American Variseal
- Busak+Shamban
- Dowty Seals
- Chase Walton
- Forsheda
- GNL
- Hydro-Components
- Impervia
- Nordex
- Orkot
- Palmer Chenard
- Polypac
- SF Medical
- Shamban
- Silcofab
- Skega
- Stefa
- Wills

Proprietary materials

Ongoing development has yielded some of the most successful sealing materials available for these types for sealing.

- HiMod®
- Isolast®
- Luytex®
- Orkot®
- Turcite®
- Turcon®
- Turel®
- Zurcon®

Products, brands and materials

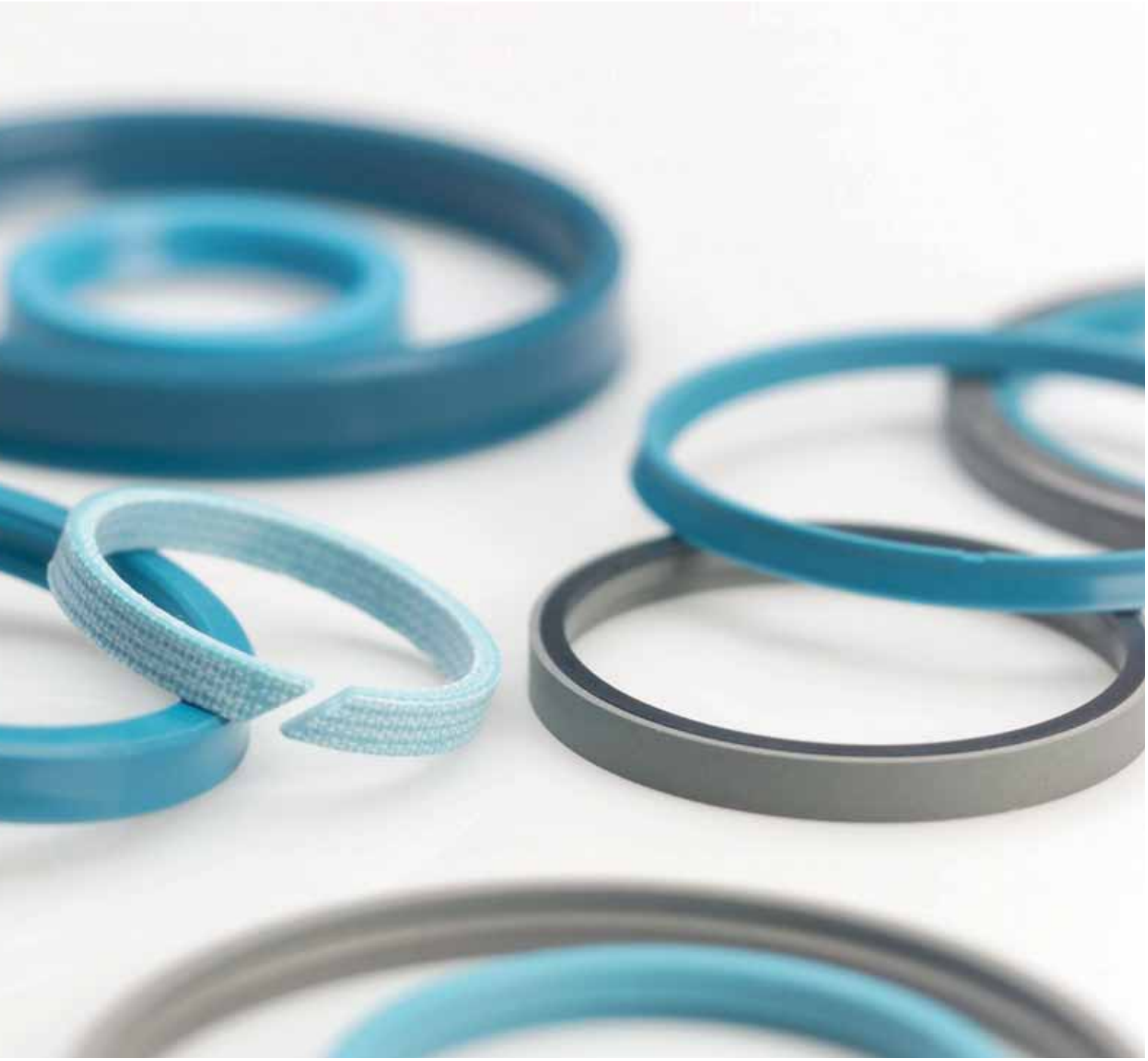

Latest information available at www.tss.trelleborg.com
Edition January 2011

TRELLEBORG
SEALING SOLUTIONS

Seals get animated

A range of films specific to different industries or products

Seals get animated

Complex sealing configurations can feature a large number sealing elements. Trying to illustrate these on a 2D page is difficult and can never properly show their function or characteristics. Trelleborg Sealing Solutions therefore turned to the latest graphic technologies to produce 3D animations of applications and typical sealing solutions for them.

A range of films specific to different industries or products are available to view on the Trelleborg Sealing Solutions website or via YouTube.

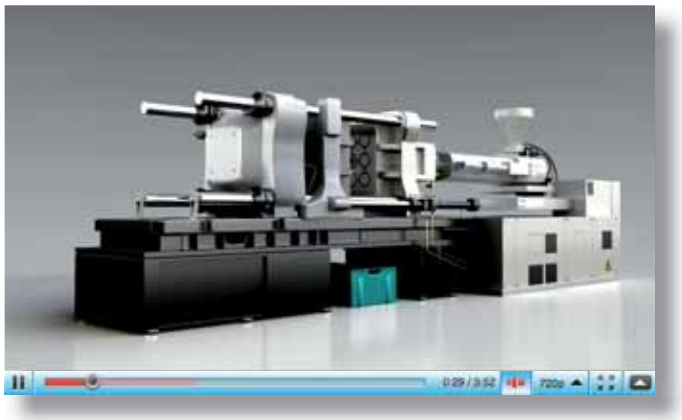

You can now link to our films and animations from

www. **tss.trelleborg.com/films**

or view them on You Tube at

www. **YouTube.com/trelleborgseals**

Seals get animated

TRELLEBORG
SEALING SOLUTIONS

YouTube™

TRELLEBORG
SEALING SOLUTIONS

Online tools make life easier

Trelleborg Sealing Solutions has developed a number of online tools that make the working life of an engineer specifying seals easier.

Online tools make life easier

Trelleborg Sealing Solutions has developed a number of online tools that make the working life of an engineer specifying seals easier.

All these industry-leading online tools are available free-of-charge from the Trelleborg Sealing Solutions website at www.tss.trelleborg.com. To use these advanced services all you have to do is register on the Members Area.

www. tss.trelleborg.com

Sealing Solutions Configurator

The Sealing Solutions Configurator is the first tool of its kind offered by any seal supplier. It allows engineers to identify a proven sealing solution for their specific application in just four easy steps.

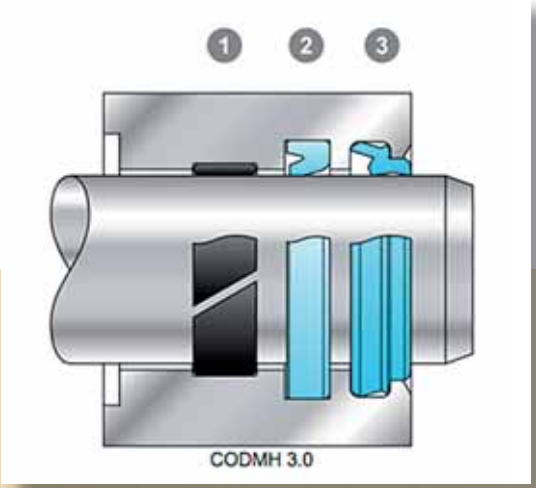

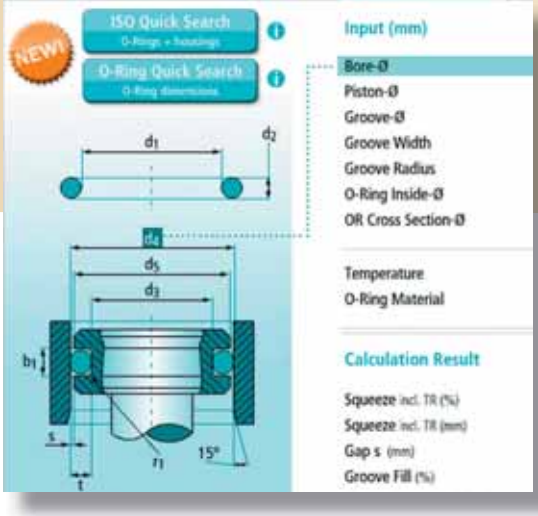

O-Ring Calculator

An industry-leading tool, the easy to use O-Ring calculator includes a sizing capability, design parameter recommendations and complete measurements. Results and comments may be printed, saved online or filed as a PDF.

Online tools make life easier

Powerful electronic Catalog

With the powerful electronic catalog you can search through over 100,000 seals by item number or by their properties. Comprehensive and detailed information can be accessed along with an interactive quote facility.

Versatile CAD service

The CAD download facility provides thousands of drawings from a wide seal range. It gives the option of 2 or 3 dimensional files, in a range of formats to suit most commonly used CAD systems.

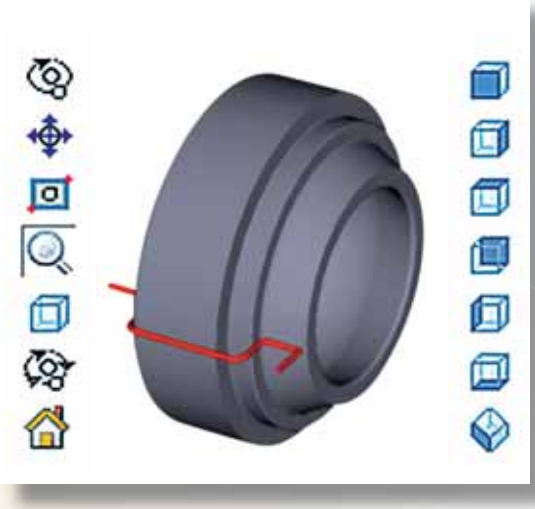

Materials search and chemical compatibility check

These two programs allow you to find out the compatibility of sealing materials to hundreds of different media and help identify the most suitable material for your application.

TRELLEBORG
SEALING SOLUTIONS

Part II
Piston Seals

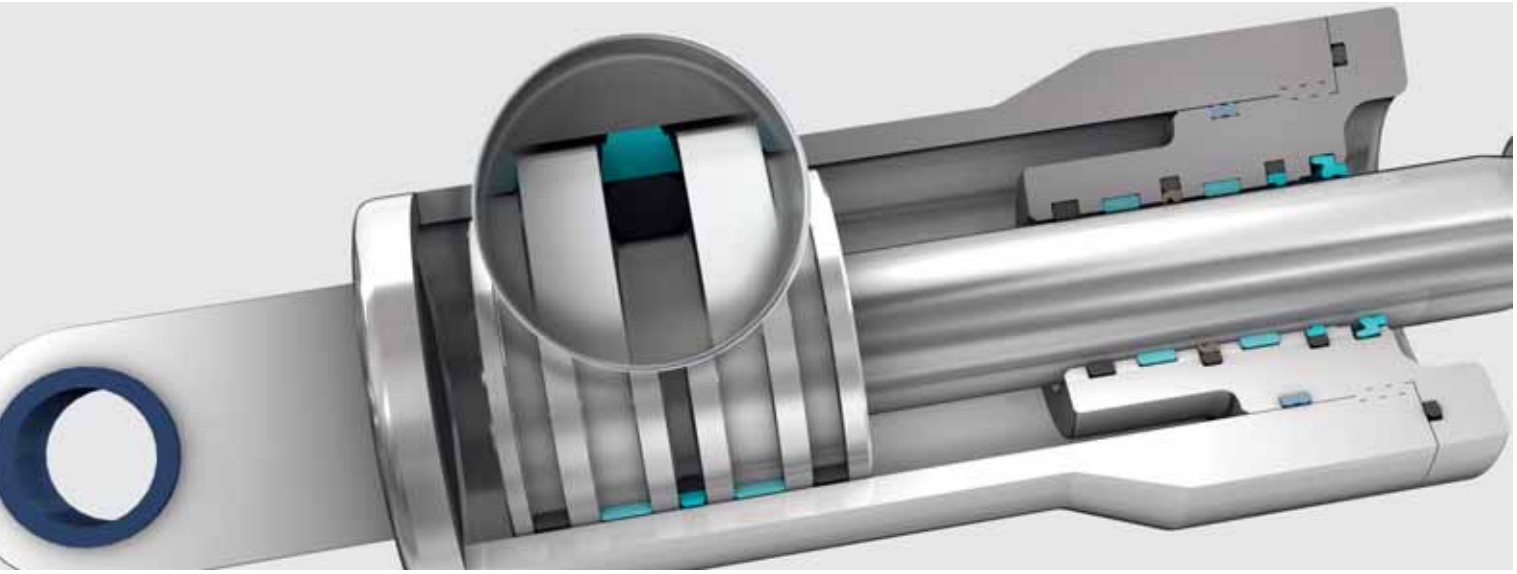

Contents

■ Choice of the Sealing Element

Sealing elements have a decisive influence on the design, function and service life of hydraulic and pneumatic cylinders and systems.

This applies equally to the piston seals where leak tightness, resistance to wear and gap extrusion, resistance to process media, resistance to high and low temperatures, low friction, compact form and simple installation are demanded in order to meet the requirements of industry for a functional sealing solution.

The significance of these parameters and their limits is generally dependent on the requirements of the specific application. Trelleborg Sealing Solutions has therefore developed a complete range of seals which, due to their optimized geometries and designs and the use of high-quality materials such as Turcon® and Zurcon®, satisfy the technical and economic demands of the industry in full.

In order to be in a position to select the most appropriate seal type and material, it is necessary to first define all the desired functional parameters. Table I can then be used to make an initial selection of seals according to the specific requirements of the application.

The second column of the table contains the number of the page on which further general information together with specific design and installation instructions on the particular seal type and materials (or material combinations with multi-element seals, e.g. Turcon® Glyd Ring® T) can be found.

Furthermore, attention is drawn to the quality of the mating surface. We recommend that the limits specified there be observed, as they have a decisive influence on the functionality and service life of the system.

The final choice of seal type and material must also take account of the detailed information on the seal elements.

Please do not hesitate to contact our Technical Department for further information on specific applications and special technical questions.

Note on Ordering

All multi-element standard piston seals, e.g. Glyd Ring® T, are generally supplied as complete seal sets. The supply includes the seal and matching elastomer energizing elements. The O-Ring does not have to be ordered separately. It is also possible to use other O-Ring materials from our O-Ring catalogue. In this case, please order the seal ring and O-Ring separately. We will inform you the sizes of the O-Ring on request.

When ordering the seal ring separately, it is then not necessary to mention the "O-Ring material code" in the TSS Article No. shown in the ordering examples.

Older designs of seals no longer contained in this catalogue naturally continue to be available (see chapter Non Standard Seals). For all new applications, however, we recommend the use of the seal types and preferred sizes (ISO series, wherever possible) listed in this catalogue.

Other combinations of Turcon® materials and special designs can be developed and supplied for special applications in all intermediate sizes up to 2.700 mm diameter, provided there is sufficient demand.

The sizes contained in this catalogue are generally available from stock or can be supplied at short notice. We reserve the right to modify our supply programme.

Table I Selection Criteria for Piston Seals

Seal		Application				Standard	Size Range	Ac-tion		Technical Data*			Recom-mended Seal Material
										Temp. Range **	Speed	Pressure	
Type	Page	Field of Application	Light	Medium	Heavy	ISO/DIN	mm	Single	Double	°C	m/s	MPa max.	
Turcon® Glyd Ring® 	15	Mobil hydraulic	●	●	●	7425/1	8-2700		X	-45/ +200	15	50	Turcon® M12
		Machine tools	●	●	●							50	Turcon® T46
		Injection molding machines	●	●	●							20	Turcon® T05
		Presses	●	●	●		8-2300			-45/ +110	2	60	Zurcon® Z51
Turcon® Glyd Ring® T 	25	Mobile hydraulics	●	●	●	7425/1	8-2700		X	-45/ +200	15	50	Turcon® M12
		Standard cylinders	●	●	●								
		Machine tools	●	●	●							50	Turcon® T46
		Injection moulding machines	●	●	●								
		Presses	●	●	●		8-2300			-45/ +110	2	60	Zurcon® Z51
		Automotive industry	●	●	●								
Zurcon® Glyd Ring® P 	35	Earthmoving Equipment		●	●	7425/1 3320	45-200		X	-30/ +110	1	50	Zurcon® Z66 + NBR
		Mobile hydraulic		●	●								
		Construction Machinery		●	●								
Turcon® AQ-Seal® 5 	41	Mobile hydraulic		●	●	-	40-700		X	-45/ +200	3	50	Turcon® M12
		Holding cylinders		●	●								
		Piston accumulators		●	●							50	Turcon® T46
Turcon® AQ-Seal® 	51	Standard cylinders	●	●		7425/1	15-700		X	-45/ +200	2	40	Turcon® M12
		Piston accumulators	●	●								40	Turcon® T46
		Fluid/gas separation	●	●									
		Holding cylinders	●	●									
Compact Seal PHD 	61	Mobile hydraulic	●	●	●	-	50-180		X	-45/ +135	1.5	40	PTFE Bronze + NBR + POM
		Excavators	●	●	●								
		Heavy duty hydraulic cylinders	●	●	●								
Turcon® Stepseal® 2K 	67	Mobile hydraulics	●	●	●	7425/1	8-2700	X		-45/ +200	15	50	Turcon® M12
		Standard cylinders	●	●	●								
		Machine tools	●	●	●							50	Turcon® T46
		Injection moulding machines	●	●	●								
		Presses	●	●	●		8-2300			-45/ +110	2	60	Zurcon® Z51

Piston Seals

Seal		Application				Standard	Size Range	Ac-tion		Technical Data*			Recom-mended Seal Material
										Temp. Range **	Speed	Pressure	
Type	Page	Field of Application	Light	Medium	Heavy	ISO/DIN	mm	Single	Double	°C	m/s	MPa max.	
Turcon® Stepseal® V	77	Mobile hydraulics	●	●	●	7425/1	15-2700	X		-45/ +200	15	50	Turcon® M12
		Machine tools	●	●	●							50	Turcon® T46
		Injection moulding machines	●	●	●								
		Presses											
Turcon® Double Delta®	87	Machine tools	●	●		3601/3771 AS4716	5-2700		X	-45/ +200	15	20	Turcon® T05
		Handling devices/ manipulators	●	●								35	Turcon® M12
		Valves	●	●								35	Turcon® T46
		Chemical industry	●	●									
Turcon® Variseal®M2	95	High and low temperatures	●	●		3771 AS4716	6-2500	X		-70/ +260	15	40	Turcon® T40
		Aggresive media	●	●			6-2700					20	Turcon® T05
		Foodstuffs	●	●									
Turcon® VL Seal®	103	Machine tools	●	●	●	3601/3771 AS4716	10-2700	X		-45/ +200	15	50	Turcon® M12
		Automotive industry	●	●	●							50	Turcon® T46
		Handling devices / manipulators	●	●	●		10-2300			-45/ +110	2	25	Zurcon® Z52
Zurcon® U-Cup PUA	113	Presses	●	●	●	-	16-250	X		-35/ +110	0.5	40	Zurcon® Z20
		Lift platforms	●	●	●								
		Aftermarket	●	●	●								
Zurcon® Wynseal	119	Standard cylinders	●	●		7425/1	12-300		X	-35/ +110	0.5	25	Zurcon® Z20 + NBR
		Mobile hydraulics	●	●								40	Zurcon® Z23 + NBR
Zurcon® Wynseal M	125	Standard cylinders	●	●		7425/1	8-2300		X	-45/ +110	0.5	25	Zurcon® Z52
		Mobile hydraulic	●	●								45	Zurcon® Z51
		Handling machinery	●	●									
		Agriculture	●	●			8-2700			-45/ +200	10	35	Turcon® M12

TRELLEBORG SEALING SOLUTIONS

Piston Seals

Seal		Application				Standard	Size Range	Ac-tion		Technical Data*			Recom-mended Seal Material
										Temp. Range **	Speed	Pressure	
Type	Page	Field of Application	Light	Medium	Heavy	ISO/DIN	mm	Single	Double	°C	m/s	MPa max.	
Compact Seal PHD/P	135	Mobile hydraulic	●	●	●	-	50-180		X	-35/ +110	0.5	40	Zurcon® Z20 + NBR + POM
		Excavators	●	●	●								
		Heavy duty hydraulic cylinders	●	●	●								
Compact Seal DAS/DBM	141	Standard cylinders	●	●		6547	20-250		X	-30/ +100	0.5	35	NBR + TPE + POM
		Holding cylinders	●	●									
		Agricultural machinery	●	●									
Compact Seal PCC/PCG	151	Truck cranes	●	●	●	6547	40-270		X	-35/ +110	0.5	40	Zurcon® Z20 + NBR + POM
		Mini excavators	●	●	●								
		Heavy duty cylinders	●	●	●								
Duopac DPS	157	Mining equipment	●	●	●	-	40-250		X	-30/ +130	0.5	40	Fabric reinforced NBR + POM
		Presses	●	●	●								
		Steel mills	●	●	●								
		Water hydraulic	●	●	●								
Veepac CH	165	Presses	●	●	●	-	20-545	X		-30/ +130	0.5	40	Fabric reinforced Rubber + POM
		Steel mills	●	●	●								
		Ship hydraulic	●	●	●								
		Scrape shears	●	●	●								
		Civil engineering	●	●	●								
		Continous casting	●	●	●								
		Special hydraulic cylinders	●	●	●								
		Water locks	●	●	●								
Veepac CH/G1	171	Mining equipment	●	●	●	-	40-250	X		-30/ +200	0.5	40	Fabric reinforced Rubber
		Excavators	●	●	●								
		Steel mills	●	●	●								
		Presses	●	●	●								
Selemaster DSM	177	Mining equipment	●	●	●	-	45-360		X	-30/ +130	0.5	70	Fabric reinforced Rubber + POM
		Excavators	●	●	●								
		Steel mills	●	●	●								
		Presses	●	●	●								

* The data below are maximum values and cannot be used at the same time. The max. pressure depends on temperature and gap dimension.

** Temperature Range is depending on choise of elastomer material and Media.
In the case of Turcon® seals in unpressurized applications in temperatures below 0 °C please contact our application engineers for assistance!

■ Design Instructions

Lead in chamfers

Piston seals are always fitted with an interference fit. In order to avoid damage during installation, lead-in chamfers and rounded edges must be provided on the cylinder barrel (Figure 1). If this is not possible for design reasons, a separate installation tool must be used.

The minimum lead-in chamfer depends on the profile size of the seal and can be seen from the following tables.

Generally ΔD_N min. from Table II, Table III and Table IV is recommended but ΔD_N must also exceed 0.015 x bore diameter D_N (relevant for big diameter cylinders).

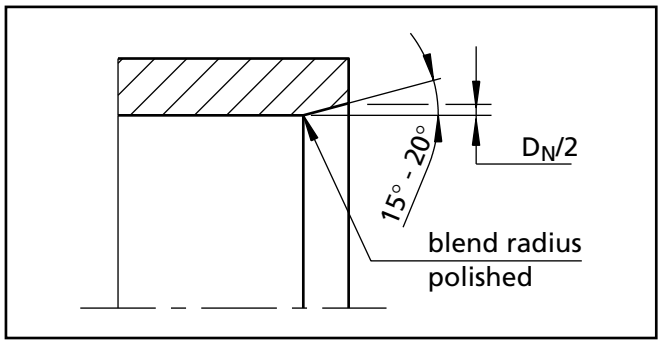

Figure 1 Lead-in chamfer

Table II Elastomer Energized Seals

Lead-in Chamfer Diameter increase ΔD_N min.	Groove Width L1*
1.1	2.2
1.4	3.2
1.9	4.2
2.7	6.3
3.5	8.1
4.0	9.5
5.5	13.8

* The groove width can be found in table "Installation dimensions" for Turcon® Glyd Ring®, Turcon® Glyd Ring® T, Turcon® AQ-Seal® 5, Turcon® Stepseal® 2K, Turcon® Stepseal® V, Zurcon® Wynseal M and Turcon® AQ-Seal®.

Table III Compact Seal and Variseal®

Lead-in Chamfer Diameter increase ΔD_N min.	Compact Seal Groove Depth**	Turcon® Variseal® M2 Series
1.1	3.5	
1.1	4.0	
1.4	5.0	
2.2	7.5	PVA0
2.7	10.0	PVA1,PVA2
3.5	12.5	
4.0	15.0	PVA3
5.5	20.0	
6.5		PVA4
9.5		PVA5

** The groove depth is calculated as (D - D1)/2. The dimensions for D and D1 can be found in the tables "Installation dimensions", from chapter Compact Seal DAS and DBM.

Table IV Double Delta®

Lead-in Chamfer*** Diameter increase ΔD_N min.	O-Ring Cross Section**** d_2	
1.1	1.78	-
1.4	2.40	2.62
1.9	3.00	3.53
2.7	5.33	5.70
3.5	7.00	8.40

*** Though not less than 1.5 % of service diameter (bore/rod diameter).

**** The O-Ring cross section d_2 can be found in the in the appropriate table "Installation dimensions", from chapter Double Delta®.

Surface Roughness DIN EN ISO 4287

The functional reliability and service life of a seal depend to a very great extent on the quality and surface finish of the mating surface to be sealed.

Scores, scratches, pores, concentric or spiral machining marks are not permitted. Higher demands must be made on the surface finish of dynamic surfaces than of static mating surfaces.

The characteristics most frequently used to describe the surface microfinish R_a, R_z and R_{max} are defined in DIN EN ISO 4287. These characterics alone, however, are not sufficient for assessing the suitability in seal technology. In addition the material contact area of the surface roughness profile R_{mr} in accordance with DIN EN ISO 4287 should be demanded. The significance of this surface specification is illustrated in Figure 2. It shows clearly that specification of R_a and R_z alone does not describe the surface roughness profile accurately enough for the seal technology and is thus not sufficient for assessing the suitability. The material contact area R_{mr} is essential for assessing surfaces, as this parameter is determined by the specific surface roughness profile. This in turn is directly dependent on the machining process employed.

Trelleborg Sealing Solutions recommends that the following surface finishes be observed:

Table V Surface Roughness

Surface Roughness µm			
Parameter	Mating Surface		Groove Surface
	Turcon® Materials	Zurcon® and Rubber	
R_{max}	0.63 - 2.50	1.00 - 4.00	< 16.0
$R_{z\ DIN}$	0.40 - 1.60	0.63 - 2.50	< 10.0
R_a	0.05 - 0.20	0.10 - 0.40	< 1.6

The material contact area R_{mr} should be approx. 50 to 70%, determined at a cut depth c = 0.25 x R_z, relative to a reference line of $C_{ref.}$ 5%.

Surface profile	R_a	R_z	R_{mr}
closed profile form 	0.1	1.0	70%
open profile form 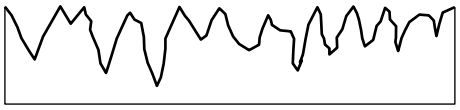	0.2	1.0	15%

Figure 2 Profile forms of surfaces

Figure 2 shows two surface profiles, both of which exhibit nearly the same value for R_z in the test procedure. The difference becomes obvious only when the material contact area of the surface roughness profiles are compared. These show that the upper roughness profile with R_{mr} = 70% has the better seal/mating surface ratio.

■ Installation of Piston Seals

General Installation Instructions

The following points should be observed before installation of the seals:

- Ensure the cylinder tube has a lead in chamfer; if not, use an installation sleeve
- Deburr and chamfer or round sharp edges, cover the tips of screw threads
- Remove machining residues such as chips, dirt and other foreign particles and carefully clean all parts
- The seals can be installed more easily if they are greased or oiled. Attention must be paid to the compatibility of the seal materials with these lubricants. Use only grease without solid additives (e.g. molybdenum disulphide or zinc sulphide).
- Use no sharp-edged installation tools

Installation in Split Grooves

Installation in split grooves is simple. The sequence of installation corresponds to the configuration of the seal. Individual seal elements must not be allowed to twist. During final installation (installation of the piston in the cylinder), elastomer or spring-preloaded seals must be sized. The corresponding cylinder barrel can be used for this purpose, provided it has a long lead-in chamfer. Alternatively, a sizing sleeve should be used.

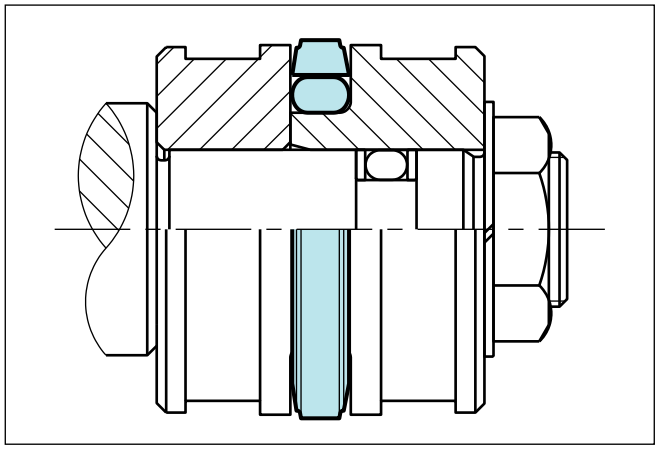

Figure 3 Installation in a split groove

Installation in Closed Grooves

- Without installation aids

  Observing the instructions in the chapter "General installation instructions", installation of Compact Seal and Wynseal seal elements in closed grooves is relatively simple.

For Turcon® and Zurcon® seals, the use of installation aids is recommended. If installation has to be performed without installation aids, however, the following points should be observed:

Turcon® seals can be installed more easily by heating in oil, water or using a hot air fan to approx. 80 °C to 100 °C (expanding and then shrinking back to the original form).

Use no sharp edged tools to expand the seal rings.

Sizing of the seal ring is achieved with a separate sizing sleeve, or with the cylinder tube provided this has lead-in chamfers equivalent to 2 x the values from Table II.

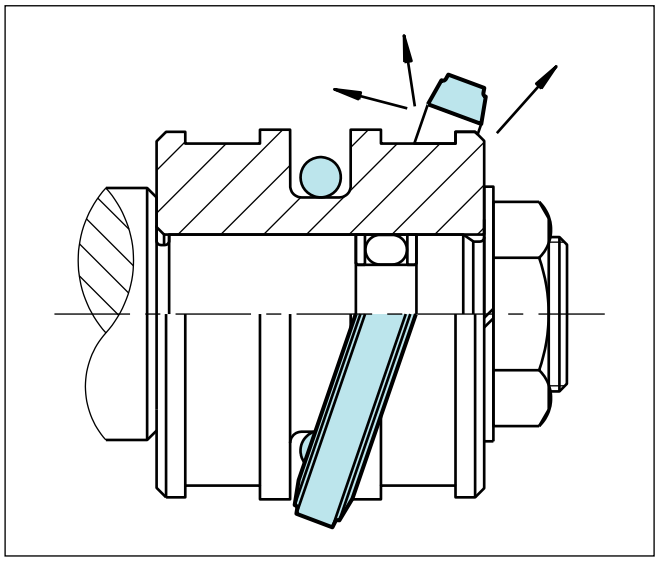

Figure 4 Fitting the seal ring onto the O-Ring in the groove

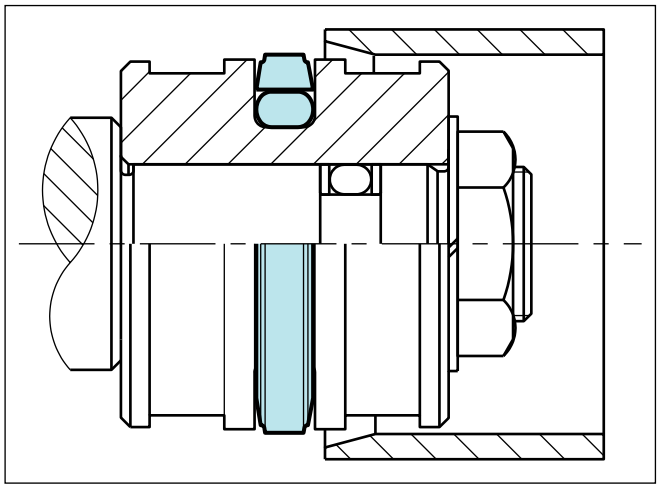

Figure 5 Sizing of the installed seal

Installation in Closed Grooves

- With installation aids

Use of a three-piece installation tool is recommended for the series production installation of Turcon® and Zurcon® seal elements. The tool consists of:

- Installation sleeve
- Expanding sleeve
- Sizing sleeve

All these parts should be made of a polymer material (e.g. PA6) with good sliding characteristics and low abrasiveness to avoid damage to the seals.

In view of the wide range of sizes and the application-specific installation conditions, these installation tools cannot be supplied as standard by Trelleborg Sealing Solutions.

On request, however, we will gladly provide specimen drawings to allow you to manufacture these tools.

The sequence of installation is illustrated in Figure 6 to Figure 8. Note, however, that the installation of Turcon® seal elements should be performed quickly in order to ensure optimum recovery of the seal ring.

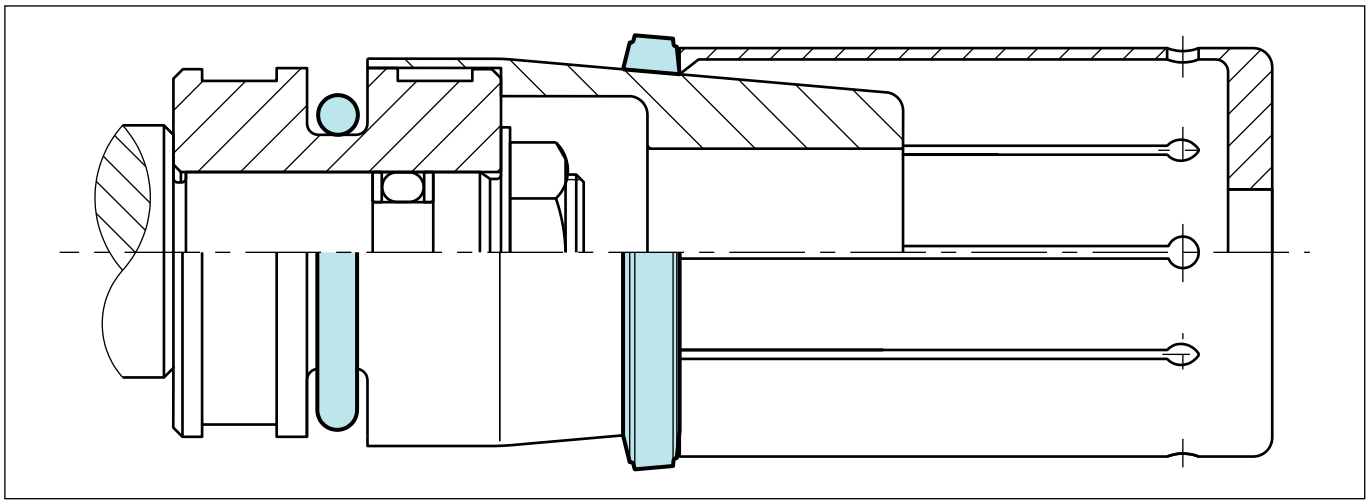

Figure 6 Expanding the Turcon® or Zurcon® sealing element using an expanding sleeve over the installation sleeve

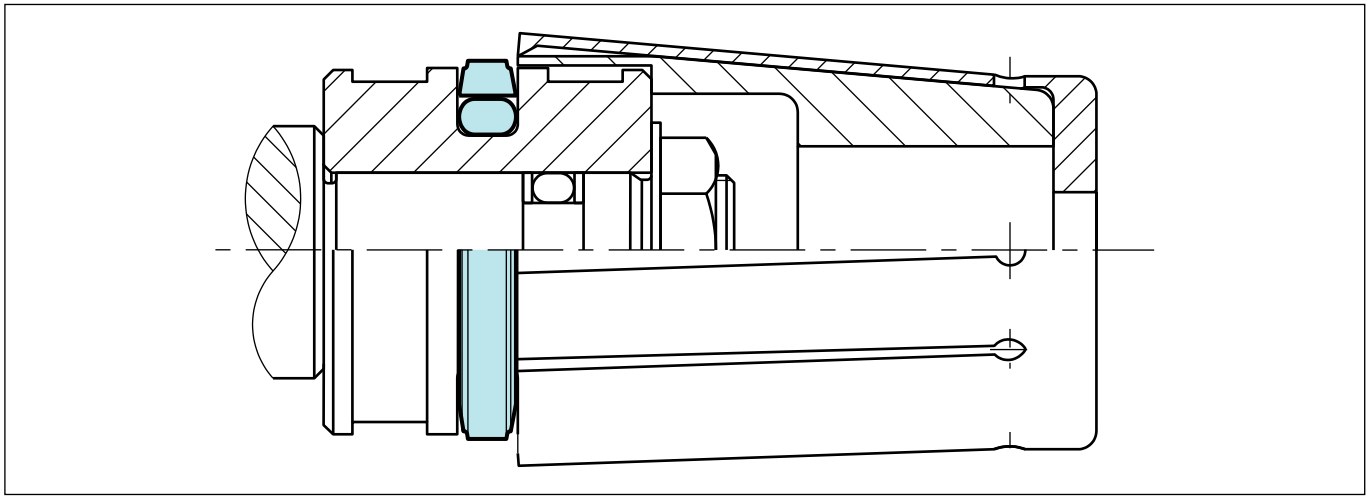

Figure 7 Sealing element after snapping into the groove

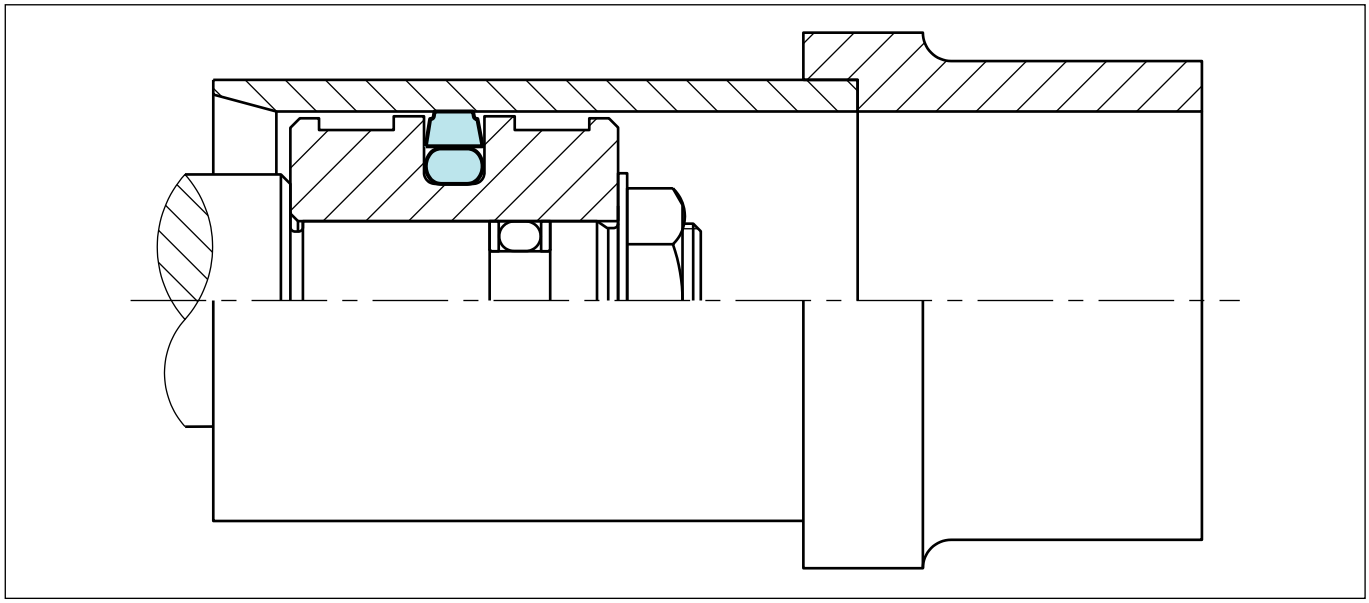

Figure 8 Sizing the sealing element with sizing sleeve

Installation of Turcon® Double Delta®

Installation in closed grooves is possible from 8 mm bore diameter. For diameters smaller than 50 mm a loading mandrel (Figure 9) is recommended. After installation the seal must be calibrated, this may be done with the lead-in chamfer of the cylinder tube or by means of a separate calibration sleeve.

- Turcon® piston seals can be installed more easily by heating to approx. 80 °C to 100 °C (expanding and then shrinking back to the original form).

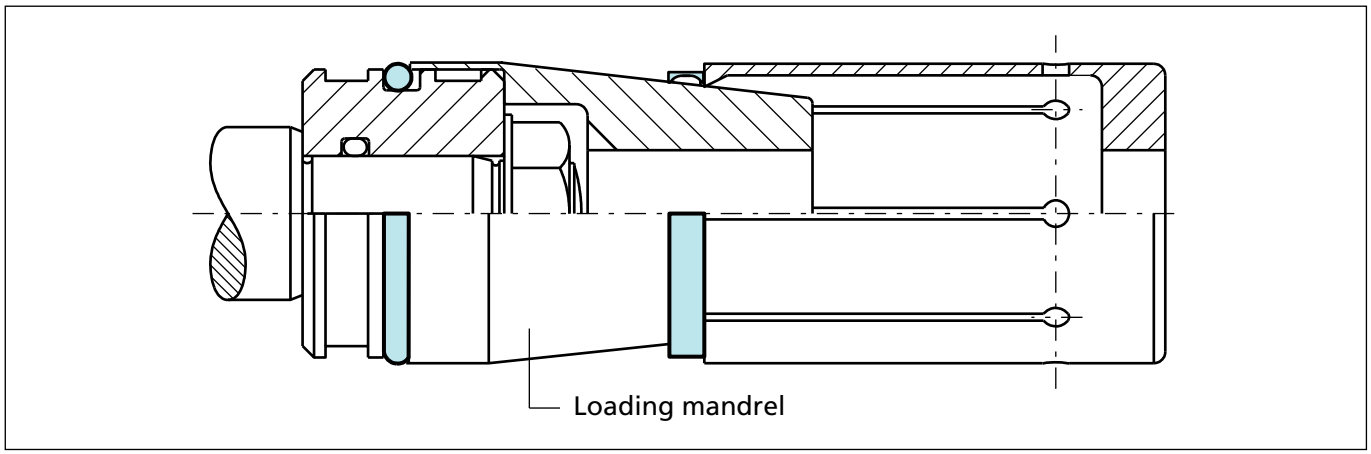

Figure 9 Installation in a closed groove

Installation for Turcon® VL Seal®

Installation in closed grooves is possible for diameters according to Table VI.

The O-Ring is inserted in the groove and located at the side of the groove, where after the seal is pushed over the loading mandrel and into the groove, note the difference in design of the pusher and the loading mandrel depending on direction of installation, see Figure 10. After insertion in the groove the seal is preferably calibrated before the piston is inserted in the cylinder.

- Turcon® piston seals can be installed more easily by heating to approx. 80 °C to 100 °C (expanding and then shrinking back to the original form).

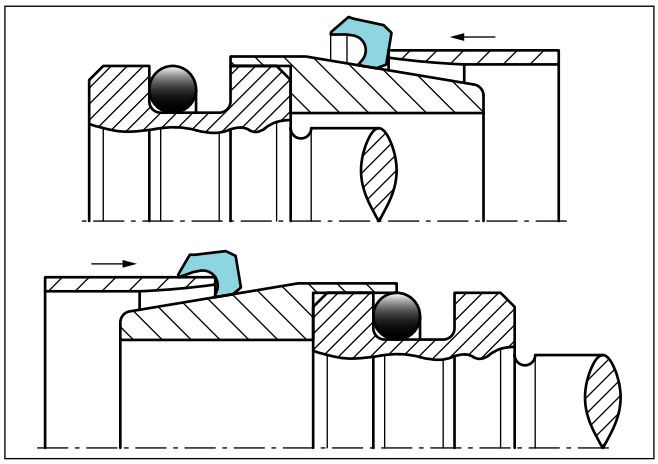

Figure 10 Installation of Piston VL Seal® in closed groove

Table VI Closed groove installation for VL Seal®

VL Seal® for Piston		
Type	Diameter	
PEL1	From	Ø 40 mm
PEL2	From	Ø 60 mm
PEL3	From	Ø 100 mm
PEL4	From	Ø 135 mm
PEL5	From	Ø 175 mm
PEL6	From	Ø 400 mm

Installation of Spring Energized Seals

Turcon® Variseal® seals should preferably be installed in split grooves. Installation in half-open grooves is possible with a snap fitting. Figure 11 shows the design of the groove.

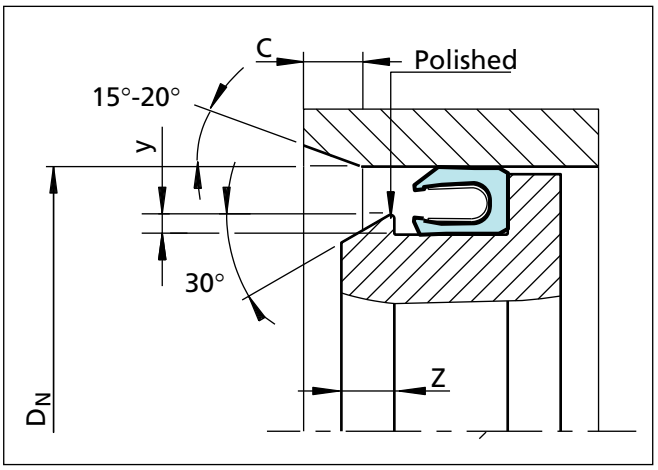

Figure 11 Installation in a half-open groove

Table VII Installation in Half-Open Grooves

Series No.	D_N min.	Y min.	C min.	Z min.
PVA0	6.0	0.4	4.0	2.5
PVA1	10.0	0.6	5.0	3.5
PVA2	16.0	0.7	5.0	3.5
PVA3	28.0	0.8	7.5	4.5
PVA4	45.0	0.9	12.0	7.5
PVA5	65.0	1.5	12.0	7.5

For further details, see chapter Turcon® Variseal®

In exceptional cases or with existing designs, an installation in closed grooves is also possible. The details in Table VIII should be regarded as guide values for installation.

Table VIII Installation in closed grooves

Series No.	D_N min.
PVA0	35.0
PVA1	50.0
PVA2	70.0
PVA3	105.0
PVA4	140.0
PVA5	220.0

Installation of the Compact Seal

The Compact Seal can be installed in one-piece or split pistons. On one-piece pistons, the inner rubber- elastic sealing element is first installed in the middle of the groove diameter by expanding over the piston. Then the cut Back-up Ring are fitted on both sides of the sealing element and then the two cut guide rings are installed.

On split pistons the individual parts are installed in the following order: Guide ring, Back-up Ring, sealing element, Back-up Ring, Guide ring.

Before installation all seal parts, including piston and cylinder, should be oiled or greased.

Turcon® Glyd Ring®

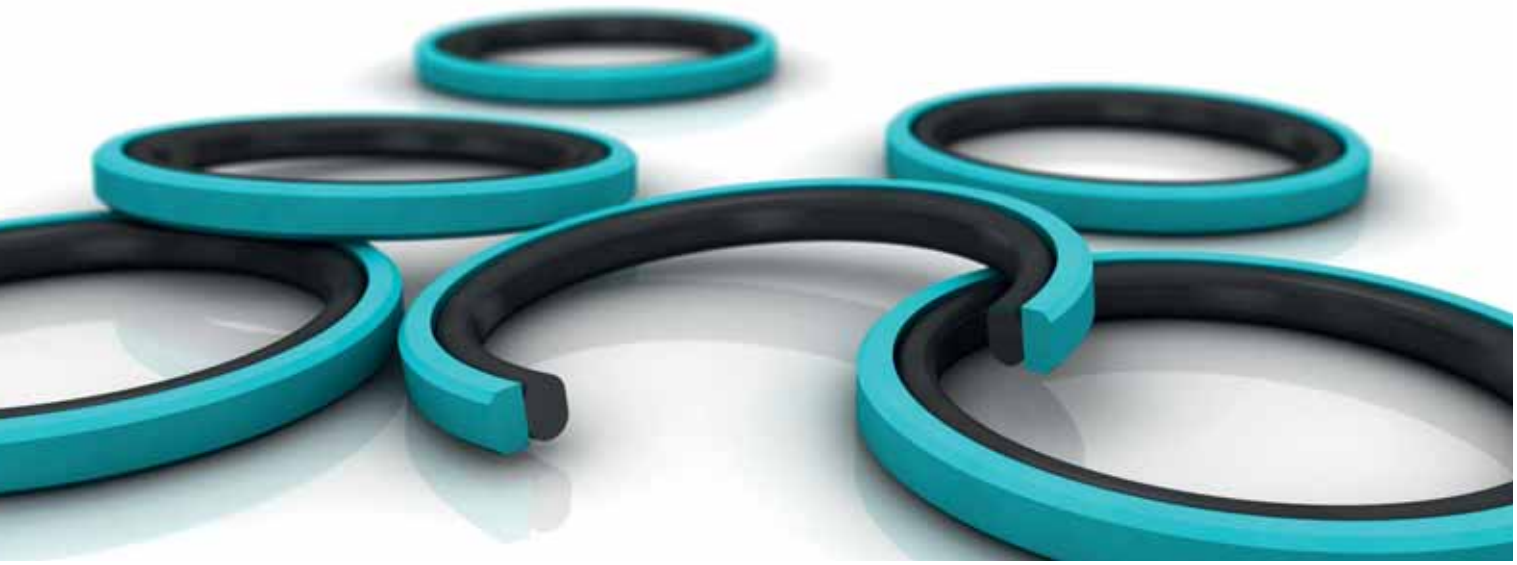

Double Acting

Rubber Energized Plastic Faced Seal

Material:
Turcon®, Zurcon® and Elastomer

■ Turcon® Glyd Ring®

Description

Successfully used for decades, the Tucon® Glyd Ring® is a very effective and reliable low frictional seal. It is particularly suitable as a piston seal in both high and low pressure systems.

The double acting Tucon® Glyd Ring® is a combination of a Turcon based slipper seal and an energising O-Ring. It is produced with an interference fit which together with the squeeze of the O-Ring ensures a good sealing effect even at low pressure. At higher system pressures, the O-Ring is energised by the fluid, pushing the Turcon® Glyd Ring® against the sealing face with increased force.

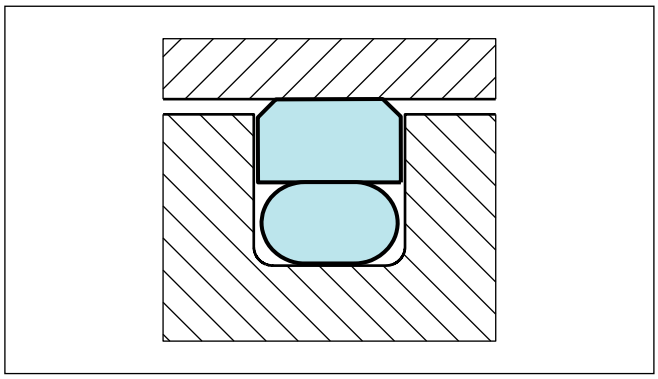

Figure 12 Turcon® Glyd Ring®

The geometry of the Tucon® Glyd Ring® ensures a good static sealing and allows the lubricating hydrodynamic oil film to be build under the seal in reciprocating applications.

Notches
To assure that a rapid energising of the seal takes place at sudden changes of pressure and direction of motion, radial "notches" are machined on both sides of the seal.

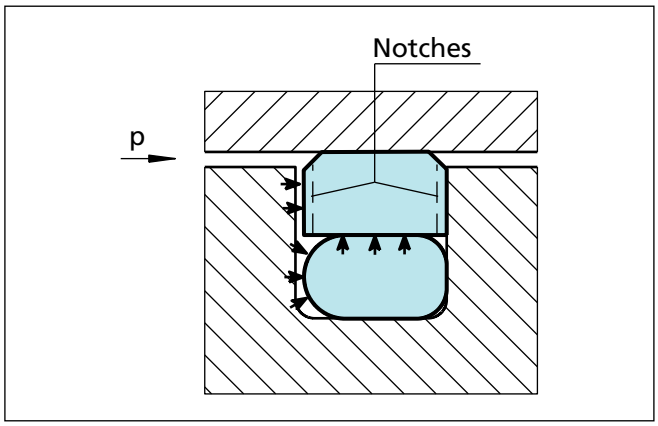

Figure 13 Turcon® Glyd Ring® with notches

Notches are standard on the following series and diameters
PG 42 for bore dia. > 30 mm
PG 44 for bore dia. > 20 mm
PG 46 for bore dia. > 40 mm

Advantages

- No stick-slip effect when starting for smooth operation
- Minimum static and dynamic friction coefficient for a minimum energy loss and operating temperature
- Suitable for non lubricating fluids depending on seal material for optimum design flexibility
- High wear resistance ensures long service life
- Installation grooves acc. to ISO 7425/1
- No adhesive effect to the mating surface during long period of inactivity or storage
- Suitable for most hydraulic fluids in relation with most modern hardware materials and surface finish depending on material selected.
- Suitable for new environmentally safe hydraulic fluids
- Available for all cylinder diameters up to 2.700 mm.

Application Examples

Over several decades the Turcon® Glyd Ring® has been successfully implemented in a large variety of applications as double acting Piston seals of hydraulic components such as:

- Injection moulding machines
- Machine tools
- Presses
- Excavators
- Forklifts & handling machinery
- Agriculture equipment
- Valves for hydraulic & pneumatic circuits
- Servo equipment
- Pressure intensifiers
- Jacks

Technical Data

Operating conditions:

The Turcon® Glyd Ring® is recommended for reciprocating (with a length of stroke at least twice the groove width) and helical movements.

Pressure:	Up to 60 MPa
Speed:	Up to 15 m/s
Frequency:	Up to 5 Hz.
Temperature:	-45 °C to +200 °C *) (depending on O-Ring Material)
Media:	Mineral oil based hydraulic fluids, flame retardant hydraulic fluids, environmentally safe hydraulic fluids (bio-oils), phosphate ester, water and others, depending on the seal and O-Ring material compatibility (see Table X)
Clearance:	The maximum permissible radial clearance S_{max} is shown in the Table XI as a function of the operating pressure and functional diameter.

Important Note:
The above data are maximum values and cannot be used at the same time. e.g. the maximum operating speed depends on material type, pressure, temperature and gap value. Temperature range also dependent on medium.

*) In the case of unpressurized applications in temperatures below 0°C please contact our application engineers for assistance!

Materials

The following material combinations have proven effective for hydraulic applications:

For light to heavy applications with reciprocating movements in mineral oils and other media with good lubrication:

All round material for hydraulic applications with reciprocating, short stroke or helical movements in mineral oils, flame retardant hydraulic fluids HFC, phosphate ester, bio-oils or fluids having less satisfactory lubricating properties:

Turcon® Glyd Ring®:	Turcon® M12	
O-Ring:	NBR, 70 Shore A FKM, 70 Shore A	N V
Set code:	M12N or M12V	

For medium to heavy applications with reciprocating movements in mineral oils and other media with good lubrication:

Turcon® Glyd Ring®:	Turcon® T46	
O-Ring:	NBR, 70 Shore A FKM, 70 Shore A	N V
Set code:	T46N or T46V	

For specific applications, all Turcon® materials are available. Other viable material combinations are listed in Table IX.

Table IX Turcon® and Zurcon® Materials for Glyd Ring®

Material, Applications, Properties	Code	O-Ring Material Shore A	Code	O-Ring Operating Temp.* °C	Mating Surface Material	MPa max. Dynamic
Turcon® M12 **First material choice** for seals in linear motion Overall improved properties For new constructions and updating For all commonly applied hydraulic fluids including fluids with low lubrication performance Lowest friction and best sliding properties Lowest wear on seals Improved absorption of abrasive contaminants No wear or abrasion of counter surface Mineral fibre and Additives filled Colour: Dark grey	M12	NBR - 70	N	-30 to +100	Steel Steel hardened Steel chrome plated (rod) Steel plated (rod) Cast iron Stainless steel Titanium	50
		NBR - 70 Low temp	T	-45 to +80		
		FKM - 70	V	-10 to +200		
Turcon® T05 For lubricating fluids Also for gas service Very low friction Very good sliding and sealing properties Colour: Turquoise	T05	NBR - 70	N	-30 to +100	Steel hardened Steel chrome plated (rod)	20
		NBR - 70 Low temp.	T	-45 to +80		
		FKM - 70	V	-10 to +200		
Turcon® T08 For lubricating fluids and linear motion **Very high compressive strength and extrusion resistance** Hard counter surfaces is recommended Bronze filled Colour: Light to dark brown, which may have variations in shading	T08	NBR - 70	N	-30 to +100	Steel hardened Steel chrome plated (rod) Cast iron	60
		NBR - 70 Low temp.	T	-45 to +80		
		FKM - 70	V	-10 to +200		
Turcon® T10 For hydraulic and pneumatic For lubricating and non-lubricating fluids High extrusion resistance Good chemical resistance Not for electrically conducting fluids BAM tested Carbon, graphite filled Colour: Black	T10	NBR - 70	N	-30 to +100	Steel Steel hardened Steel chrome plated (rod) Stainless steel	40
		NBR - 70 Low temp.	T	-45 to +80		
		FKM - 70	V	-10 to +200		
		EPDM-70	E**	-45 to +145		
Turcon® T29 For lubricating and non-lubricating fluids Good extrusion resistance Surface texture is not suitable for gas sealing Not for electrically conducting fluids Carbon fibre filled Colour: Grey	T29	NBR - 70	N	-30 to +100	Steel Steel hardened Steel chrome plated (rod) Cast iron Stainless steel	30
		NBR - 70 Low temp.	T	-45 to +80		
		FKM - 70	V	-10 to +200		
		EPDM- 70	E**	-45 to +145		
Turcon® T40 For lubricating and non-lubricating fluids High frequency and short strokes **Water hydraulics** Surface texture is not suitable for gas sealing Carbon fibre filled Colour: Grey	T40	NBR - 70	N	-30 to +100	Steel Steel hardened Steel chrome plated (rod) Cast iron Stainless steel Aluminium	25
		NBR - 70 Low temp.	T	-45 to +80		
		FKM - 70	V	-10 to +200		
		EPDM- 70	E**	-45 to +145		

* The O-Ring Operation Temperature is only valid in mineral hydraulic oil (except EPDM). ** Material not suitable for mineral oils.
*** max. Ø 2300 mm BAM: Tested by "Bundesanstalt Materialprüfung, Germany". Highlighted materials are standard.

Turcon® Glyd Ring®

Material, Applications, Properties	Code	O-Ring Material Shore A	Code	O-Ring Operating Temp.* °C	Mating Surface Material	MPa max. Dyna-mic
Turcon® T46 For lubricated hydraulics in linear motion High compressive strength High extrusion resistance Very good sliding and wear properties BAM tested Bronze filled Colour: Light to dark brown, which may have variations in shading	T46	NBR - 70	N	-30 to +100	Steel hardened Steel chrome plated (rod) Cast iron	50
		NBR - 70 Low temp.	T	-45 to +80		
		FKM - 70	V	-10 to +200		
Zurcon® Z51*** For mineral oil based fluids **Very high abrasion and extrusion resistance** For counter surface with rougher surface finish Limited chemical resistance Max. working temperature 110 °C Cast polyurethane Colour: Yellow to light-brown	Z51	NBR - 70	N	-30 to +100	Steel Steel hardened Steel chrome plated (rod) Cast iron Stainless steel Ceramic coating	60
		NBR - 70 Low temp.	T	-45 to +80		
Zurcon® Z80 For lubricating and non-lubricating fluids Water based fluids, air and gases Dry air pneumatics High abrasion and extrusion resistance For service in abrasive conditions and media with particles Good chemical resistance Limited temperature capability (-60 to +80 °C) UHMWPE (Ultra High Molecular Weight Polyethylene) Colour: White to off-white	Z80	NBR - 70	N	-30 to (+100)	Steel Steel hardened Steel chrome plated (rod) Stainless steel Aluminium Ceramic coating	35
		NBR - 70 Low temp.	T	-45 to +80		
		EPDM- 70	E**	-45 to (+145)		

* The O-Ring Operation Temperature is only valid in mineral hydraulic oil (except EPDM). ** Material not suitable for mineral oils.
*** max. Ø 2300 mm BAM: Tested by "Bundesanstalt Materialprüfung, Germany". Highlighted materials are standard.

■ Installation Recommendation

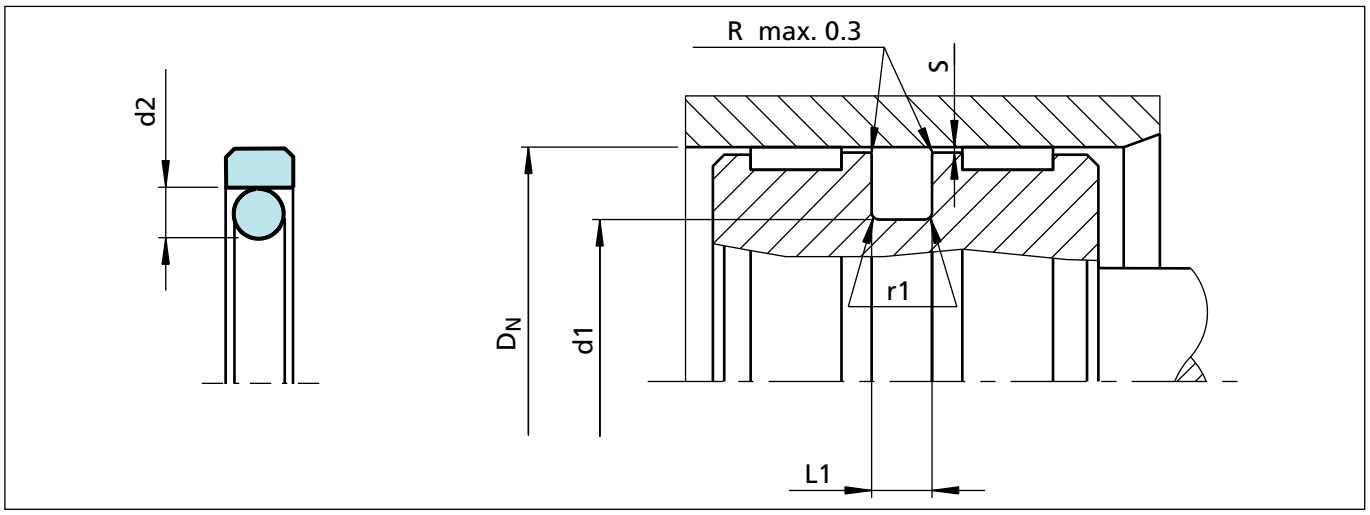

Figure 14 Installation drawing

Table X Installation dimensions

Bore Diameter D_N H9			Groove Diameter	Groove Width	Radius	Radial Clearance S max.*			O-Ring Cross-Section
Series No. PG 44	**Series No. PG 46**	**Series No. PG 42**							
Standard Application	**Light Application**	**Heavy Duty Application**	d_1 h9	L_1 +0.2	r_1	**10 MPa**	**20 MPa**	**40 MPa**	d_2
8 - 14.9	15 - 39.9	-	D_N - 4.9	2.2	0.4	0.30	0.20	0.15	1.78
15 - 39.9	40 - 79.9	-	D_N - 7.5	3.2	0.6	0.40	0.25	0.15	2.62
40 - 79.9	80 - 132.9	15 - 39.9	D_N - 11.0	4.2	1.0	0.40	0.25	0.20	3.53
80 - 132.9	133 - 329.9	40 - 79.9	D_N - 15.5	6.3	1.3	0.50	0.30	0.20	5.33
133 - 329.9	330 - 669.9	80 - 132.9	D_N - 21.0	8.1	1.8	0.60	0.35	0.25	7.00
330 - 669.9	670 - 999.9	133 - 329.9	D_N - 24.5	8.1	1.8	0.60	0.35	0.25	7.00
670 - 999.9	≥ 1000	330 - 669.9	D_N - 28.0	9.5	2.5	0.70	0.50	0.30	8.40
≥ 1000	≥ 1000	≥ 1000	D_N - 38.0	13.8	3.0	1.00	0.70	0.60	12.00

* At pressures **> 40 MPa** use diameter tolerance H8/f8 (bore/piston) in area of the seal or consult TSS for alternative material or profiles.
TSS Slydring® / Wear Rings are not applicable at very small radical clearance S. Please consult the Slydring® catalog.
O-Rings with 12 mm cross section are delivered as special profilring.

Ordering Example

Turcon® Glyd Ring®, complete with O-Ring, standard application, Series PG44 (from Table X).
Bore diameter: D_N = 80.0 mm
TSS Part No.: PG4400800 (from Table XI)

Select the material from Table IX. The corresponding code numbers are appended to the TSS Part No. Preferred Series (Table XI).
Together they form the TSS Article Number. The TSS Article Number for all intermediate sizes not shown in Preferred Series (Table XI) can be determined following the example opposite.

TSS Article No. PG44 0 0800 - M12 N

- TSS Series No. (PG44)
- Type (Standard) (0)
- Bore diameter x 10* (0800)
- Quality Index (Standard) (-)
- Material code (Seal ring) (M12)
- Material code (O-Ring) (N)

* For diameters $D_N \geq 1000.0$ mm multiply only by factor 1.
Example: PG44 for diameter D_N 1200.0 mm.
TSS Article No.: PG44**X1200** - M12N.

Table XI Installation dimensions / TSS Part No.

Bore Dia. D_N H9	Groove Dia. d_1 h9	Groove Width L_1 +0.2	TSS Part No.	O-Ring Dimensions
8.0	3.1	2.2	PG4400080	2.90 x 1.78
10.0	5.1	2.2	PG4400100	4.80 x 1.8
12.0	7.1	2.2	PG4400120	6.70 x 1.8
14.0	9.1	2.2	PG4400140	8.75 x 1.8
15.0	7.5	3.2	PG4400150	7.59 x 2.62
16.0	**11.1**	**2.2**	**PG4600160**	**10.82 x 1.78**
16.0	**8.5**	**3.2**	**PG4400160**	**7.59 x 2.62**
18.0	13.1	2.2	PG4600180	12.42 x 1.78
18.0	10.5	3.2	PG4400180	9.19 x 2.62
19.05	11.55	3.2	PG4400190	10.77 x 2.62
20.0	**15.1**	**2.2**	**PG4600200**	**14.00 x 1.78**
20.0	**12.5**	**3.2**	**PG4400200**	**12.37 x 2.62**
21.0	13.5	3.2	PG4400210	12.37 x 2.62
22.0	17.1	2.2	PG4600220	17.17 x 1.78
22.0	14.5	3.2	PG4400220	13.94 x 2.62
24.0	16.5	3.2	PG4400240	15.54 x 2.62
25.0	20.1	2.2	PG4600250	18.77 x 1.78
25.0	**17.5**	**3.2**	**PG4400250**	**17.12 x 2.62**
25.0	**14.0**	**4.2**	**PG4200250**	**13.87 x 3.53**
25.4	20.5	2.2	PG4600254	17.12 x 2.62
28.0	20.5	3.2	PG4400280	20.29 x 2.62
30.0	22.5	3.2	PG4400300	21.89 x 2.62
32.0	27.1	2.2	PG4600320	26.70 x 1.78
32.0	**24.5**	**3.2**	**PG4400320**	**23.47 x 2.62**
32.0	**21.0**	**4.2**	**PG4200320**	**20.22 x 3.53**
35.0	27.5	3.2	PG4400350	26.64 x 2.62
35.0	24.0	4.2	PG4200350	23.40 x 3.53
36.0	28.5	3.2	PG4400360	28.24 x 2.62
38.0	30.5	3.2	PG4400380	29.82 x 2.62
40.0	**32.5**	**3.2**	**PG4600400**	**31.42 x 2.62**
40.0	**29.0**	**4.2**	**PG4400400**	**28.17 x 3.53**
42.0	31.0	4.2	PG4400420	29.75 x 3.53
44.45	36.95	3.2	PG4600444	36.17 x 2.62
45.0	34.0	4.2	PG4400450	32.92 x 3.53
48.0	37.0	4.2	PG4400480	36.09 x 3.53
50.0	42.5	3.2	PG4600500	40.94 x 2.62
50.0	**39.0**	**4.2**	**PG4400500**	**37.70 x 3.53**
50.0	**34.5**	**6.3**	**PG4200500**	**32.69 x 5.33**
50.8	43.3	3.2	PG4600508	42.52 x 2.62
50.8	39.8	4.2	PG4400508	37.70 x 3.53
52.0	41.0	4.2	PG4400520	40.87 x 3.53
53.0	42.0	4.2	PG4400530	40.87 x 3.53
55.0	44.0	4.2	PG4400550	44.04 x 3.53
57.0	46.0	4.2	PG4400570	44.04 x 3.53
58.0	47.0	4.2	PG4400580	47.22 x 3.53
60.0	49.0	4.2	PG4400600	47.22 x 3.53
62.0	51.0	4.2	PG4400620	50.39 x 3.53
63.0	**52.0**	**4.2**	**PG4400630**	**50.39 x 3.53**
63.0	**47.5**	**6.3**	**PG4200630**	**46.99 x 5.33**
65.0	54.0	4.2	PG4400650	53.57 x 3.53
68.0	57.0	4.2	PG4400680	56.74 x 3.53
70.0	59.0	4.2	PG4400700	56.74 x 3.53
70.0	54.5	6.3	PG4200700	53.34 x 5.33
75.0	64.0	4.2	PG4400750	63.09 x 3.53

Bore Dia. D_N H9	Groove Dia. d_1 h9	Groove Width L_1 +0.2	TSS Part No.	O-Ring Dimensions
75.0	59.5	6.3	PG4200750	56.52 x 5.33
80.0	**69.0**	**4.2**	**PG4600800**	**66.27 x 3.53**
80.0	**64.5**	**6.3**	**PG4400800**	**62.87 x 5.33**
80.0	59.0	8.1	PG4200800	58 x 7.0
82.5	67.0	6.3	PG4400825	66.04 x 5.33
85.0	69.5	6.3	PG4400850	69.22 x 5.33
85.0	64.0	8.1	PG4200850	63 x 7.0
90.0	79.0	4.2	PG4600900	78.97 x 3.53
90.0	74.5	6.3	PG4400900	72.39 x 5.33
90.0	69.0	8.1	PG4200900	68 x 7.0
95.0	84.0	4.2	PG4600950	82.14 x 3.53
95.0	79.5	6.3	PG4400950	78.74 x 5.33
95.0	74.0	8.1	PG4200950	73 x 7.0
100.0	89.0	4.2	PG4601000	88.49 x 3.53
100.0	**84.5**	**6.3**	**PG4401000**	**81.92 x 5.33**
100.0	79.0	8.1	PG4201000	78 x 7.0
101.6	86.1	6.3	PG4401016	85.09 x 5.33
105.0	94.0	4.2	PG4601050	91.67 x 3.53
105.0	89.5	6.3	PG4401050	88.27 x 5.33
108.0	92.5	6.3	PG4401080	91.44 x 5.33
110.0	99.0	4.2	PG4601100	98.02 x 3.53
110.0	94.5	6.3	PG4401100	91.44 x 5.33
110.0	89.0	8.1	PG4201100	88 x 7.0
115.0	99.5	6.3	PG4401150	97.79 x 5.33
120.0	109.0	4.2	PG4601200	107.54 x 3.53
120.0	104.5	6.3	PG4401200	100.97 x 5.33
120.0	99.0	8.1	PG4201200	98 x 7.0
125.0	114.0	4.2	PG4601250	113.89 x 3.53
125.0	**109.5**	**6.3**	**PG4401250**	**107.32 x 5.33**
125.0	**104.0**	**8.1**	**PG4201250**	**103 x 7.0**
127.0	111.5	6.3	PG4401270	110.49 x 5.33
130.0	114.5	6.3	PG4401300	113.67 x 5.33
130.0	109.0	8.1	PG4201300	108 x 7.0
132.0	121.0	4.2	PG4601320	120.24 x 3.53
135.0	114.0	8.1	PG4401350	113.67 x 7.0
140.0	124.5	6.3	PG4601400	123.19 x 5.33
140.0	119.0	8.1	PG4401400	116.84 x 7.0
145.0	129.5	6.3	PG4601450	126.37 x 5.33
145.0	124.0	8.1	PG4401450	123.19 x 7.0

Bore Dia. D_N H9	Groove Dia. d_1 h9	Groove Width L_1 +0.2	TSS Part No.	O-Ring Dimensions
150.0	134.5	6.3	PG4601500	132.72 x 5.33
150.0	129.0	8.1	PG4401500	126.37 x 7.0
155.0	134.0	8.1	PG4401550	132.72 x 7.0
160.0	**144.5**	**6.3**	**PG4601600**	**142.24 x 5.33**
160.0	**139.0**	**8.1**	**PG4401600**	**135.89 x 7.0**
165.0	144.0	8.1	PG4401650	142.24 x 7.0
170.0	149.0	8.1	PG4401700	145.42 x 7.0
175.0	154.0	8.1	PG4401750	151.77 x 7.0
180.0	164.5	6.3	PG4601800	164.47 x 5.33
180.0	159.0	8.1	PG4401800	158.12 x 7.0
190.0	169.0	8.1	PG4401900	164.47 x 7.0
194.0	178.5	6.3	PG4601940	177.17 x 5.33
200.0	**184.5**	**6.3**	**PG4602000**	**183.52 x 5.33**
200.0	**179.0**	**8.1**	**PG4402000**	**177.17 x 7.0**
205.0	184.0	8.1	PG4402050	183.52 x 7.0
210.0	189.0	8.1	PG4402100	183.52 x 7.0
215.0	194.0	8.1	PG4402150	189.87 x 7.0
220.0	199.0	8.1	PG4402200	196.22 x 7.0
230.0	214.5	6.3	PG4602300	208.92 x 5.33
230.0	209.0	8.1	PG4402300	208.90 x 7.0
240.0	219.0	8.1	PG4402400	215.27 x 7.0
250.0	**229.0**	**8.1**	**PG4402500**	**227.97 x 7.0**
250.0	**225.5**	**8.1**	**PG4202500**	**215.27 x 7.0**
250.0	234.5	6.3	PG4602500	234.32 x 5.33
254.0	233.0	8.1	PG4402540	227.97 x 7.0
260.0	239.0	8.1	PG4402600	240.67 x 7.0
265.0	244.0	8.1	PG4402650	240.67 x 7.0
268.0	247.0	8.1	PG4402680	240.67 x 7.0
270.0	249.0	8.1	PG4402700	240.67 x 7.0
280.0	259.0	8.1	PG4402800	253.37 x 7.0
290.0	269.0	8.1	PG4402900	266.07 x 7.0
300.0	279.0	8.1	PG4403000	278.77 x 7.0
300.0	275.5	8.1	PG4203000	266.07 x 7.0
304.8	283.8	8.1	PG4403048	278.77 x 7.0
310.0	289.0	8.1	PG4403100	278.77 x 7.0
320.0	**299.0**	**8.1**	**PG4403200**	**291.47 x 7.0**
320.0	**295.5**	**8.1**	**PG4203200**	**291.47 x 7.0**
330.0	305.5	8.1	PG4403300	304.17 x 7.0
340.0	315.5	8.1	PG4403400	316.87 x 7.0

Bore Dia.	Groove Dia.	Groove Width	TSS Part No.	O-Ring Dimensions
D_N H9	d_1 h9	L_1 +0.2		
350.0	325.5	8.1	PG4403500	316.87 x 7.0
360.0	335.5	8.1	PG4403600	329.57 x 7.0
370.0	345.5	8.1	PG4403700	342.27 x 7.0
380.0	355.5	8.1	PG4403800	354.97 x 7.0
400.0	**375.5**	**8.1**	**PG4404000**	**367.67 x 7.0**
420.0	395.5	8.1	PG4404200	393.07 x 7.0
430.0	405.5	8.1	PG4404300	405.26 x 7.0
440.0	415.5	8.1	PG4404400	405.26 x 7.0
450.0	425.5	8.1	PG4404500	417.96 x 7.0
460.0	435.5	8.1	PG4404600	430.66 x 7.0
480.0	455.5	8.1	PG4404800	456.06 x 7.0
500.0	**475.5**	**8.1**	**PG4405000**	**468.76 x 7.0**
555.0	530.5	8.1	PG4405550	506.86 x 7.0
600.0	575.5	8.1	PG4406000	557.66 x 7.0
640.0	615.5	8.1	PG4406400	608.08 x 7.0
660.0	635.5	8.1	PG4406600	633.48 x 7.0
700.0	672.0	9.5	PG4407000	670 x 8.4
710.0	682.0	9.5	PG4407100	680 x 8.4
740.0	712.0	9.5	PG4407400	710 x 8.4
780.0	752.0	9.5	PG4407800	750 x 8.4
800.0	772.0	9.5	PG4408000	770 x 8.4
900.0	872.0	9.5	PG4409000	870 x 8.4
1000.0	972.0	9.5	PG46X1000	970 x 8.4
1000.0	962.0	13.8	PG44X1000	960 x 12.0
1050.0	1022.0	9.5	PG46X1050	1020 x 8.4
1065.0	1027.0	13.8	PG44X1065	1025 x 12.0
1070.0	1032.0	13.8	PG44X1070	1030 x 12.0
1200.0	1172.0	9.5	PG46X1200	1170 x 8.4
1200.0	1162.0	13.8	PG44X1200	1160 x 12.0
1225.0	1187.0	13.8	PG44X1225	1185 x 12.0
1500.0	1462.0	13.8	PG44X1500	1460 x 12.0
2000.0	1962.0	13.8	PG44X2000	1960 x 12.0
2700.0	2662.0	13.8	PG44X2700	2660 x 12.0

All dimensions in **bold** type are suitable for installation in grooves to ISO 7425/1, bore dia. in accordance with ISO 3320. Other dimensions and all intermediate sizes up to 2700 mm dia. including inch sizes can be supplied.

All O-Rings with 12 mm cross section are delivered as special Profilring.

Turcon® Glyd Ring® T

Double Acting

Rubber Energized Plastic Faced Seal

Material:
Turcon®, Zurcon® and Elastomer

■ Turcon® Glyd Ring® T*

Description

Turcon® Glyd Ring® T is a further technical development of the Turcon® Glyd Ring® seal which has been successfully used for decades. It is fully interchangeable with the earlier Glyd Ring® seals in all new applications. Glyd Ring® T meets all the market demands for a function-specific seal solution, observing economic and ecological aspects.

The benefits of the patented seal concept are provided by the innovative functional principle of the trapezoidal profile cross-section.

Both lateral profile flanks are inclined so that the seal profile tapers towards the seal surface. The profile can thus retain the robust and compact form typical of piston seals without losing any of the flexibility required to achieve a pressure-related maximum compression (Figure 15).

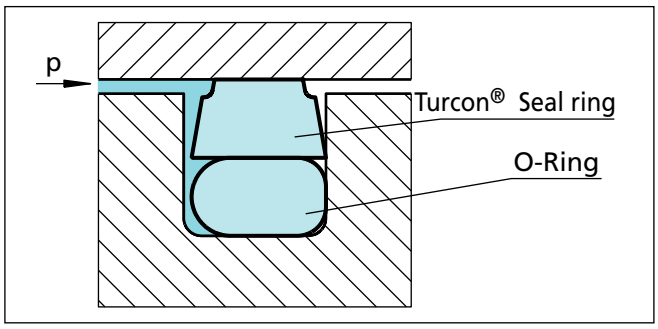

Figure 15 Turcon® Glyd Ring® T

The edge angle created by the special Glyd Ring® T crosssectional form permits an additional degree of freedom and enables a slight tilting movement of the seal. The maximum compression is thus always shifted towards the area of the seal edge directly exposed to the pressure. On the low-pressure edge of the seal, on the other hand, the Glyd Ring® T exhibits only zones with neutral strains without compressive or shearing loads, thus effectively reducing the danger of gap extrusion. The resulting benefits for the user can be seen in the following list.

Advantages

The benefits offered to date by the Glyd Ring® are still retained in full, and are now complemented by a number of further important advantages:

- Very good static leak-tightness
- Increased clearance possible (approx. +50%), depending on the operating conditions
- Due to the larger extrusion gap, safe use even with soiled media
- Low friction, no stick-slip effect
- Simple groove design, one-piece pistons possible
- Installation grooves to ISO 7425/1
- Adaptable to the operating conditions due to a wide range of possible materials (Turcon®, Zurcon®)
- Suitable for new environmentally safe hydraulic fluids
- Available for all cylinder diameters up to 2.700 mm.

Application Examples

The Turcon® Glyd Ring® T is the recommended sealing element for double acting pistons of hydraulic components such as:

- Injection moulding machines
- Machine tools
- Presses
- Excavators
- Forklifts & handling machinery
- Agriculture
- Valves for hydraulic & pneumatic circuits.
- Servo equipment
- Pressure intensifiers
- Jacks

It is particularly recommended for heavy duty and large diameter applications.

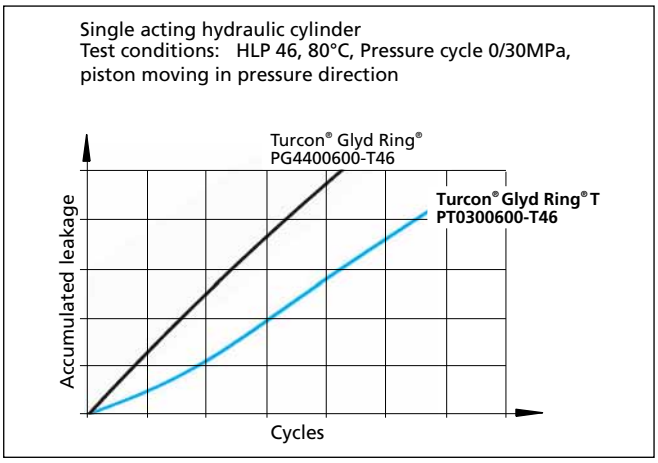

Figure 16 Dynamic leakage Turcon® Glyd Ring® T/ Turcon® Glyd Ring® as single acting piston seal

* Patent No.:
DE 4140833C3
EP 0582593
Japan 2799367
USA 5,433,452

Technical Data

Operating conditions

Pressure:	Up to 60 MPa
Speed:	Up to 15 m/s
Temperature:	-45 °C to +200 °C *) (depending on O-Ring material).
Media:	Mineral oil-based hydraulic fluids, flame retardant hydraulic fluids, environmentally safe hydraulic fluids (bio-oils), phosphate ester, water, air and others, depending on the seal and O-Ring material compatibility (see Table XIII)
Clearance:	The maximum permissible radial clearance s_{max} is shown in Table XIV, as a function of the operating pressure and functional diameter.

Important Note:
The above data are maximum values and cannot be used at the same time. e.g. the maximum operating speed depends on material type, pressure, temperature and gap value. Temperature range also dependent on medium.

*) In the case of unpressurized applications in temperatures below 0°C please contact our application engineers for assistance!

Materials

The following material combinations have proven effective for hydraulic applications:

All round material for hydraulic applications with reciprocating or short stroke in mineral oils, flame retardant hydarulic fluids HFC, phosphate ester, bio-oils or fluids having less satisfactory properties.

Turcon® Glyd Ring® T:	Turcon® M12	
O-Ring:	NBR, 70 Shore A	N
	FKM, 70 Shore A	V
Set code:	M12N or M12V	

For medium to heavy applications with reciprocating movements in mineral oils and other media with good lubrication:

Turcon® Glyd Ring® T:	Turcon® T46	
O-Ring:	NBR, 70 Shore A	N
	FKM, 70 Shore A	V
Set code:	T46N or T46V	

For specific applications, other viable material combinations are listed in Table XIII.

Series

Different cross-section sizes are recommended as a function of the seal diameters.

Table XII, shows the relationship between the series number according to the seal diameter range and the different application class sizes. These application classes are:

Standard application:	General applications in which no exceptional operating conditions exist.
Light application:	Applications with demands for reduced friction or for smaller grooves.
Heavy-duty application:	For exceptional operating loads such as high pressures, pressure peaks, etc.

Table XII Available range

Series No.	Piston Diameter D_N H9
PT00	8.0 - 140.0
PT01	8.0 - 200.0
PT02	16.0 - 380.0
PT03	40.0 - 480.0
PT04	80.0 - 700.0
PT08	133.0 - 999.9
PT05	310.0 - 999.9
PT05X	1000.0 - 1200.0
PT06	750.0 - 999.9
PT06X	1000.0 - 2700.0

For the recommended range see Table XIV.

Table XIII Turcon® and Zurcon® Materials for Glyd Ring® T

Material, Applications, Properties	Code	O-Ring Material Shore A	Code	O-Ring Operating Temp.* °C	Mating Surface Material	MPa max. Dyna-mic
Turcon® M12 **First material choice** for seals in linear motion Overall improved properties For new constructions and updating For all commonly applied hydraulic fluids including fluids with low lubrication performance Lowest friction and best sliding properties Lowest wear on seals Improved absorption of abrasive contaminants No wear or abrasion of counter surface Mineral fibre and Additives filled Colour: Dark grey	M12	NBR - 70	N	-30 to +100	Steel Steel hardened Steel chrome plated (rod) Steel plated (rod) Cast iron Stainless steel Titanium	50
		NBR - 70 Low temp.	T	-45 to +80		
		FKM - 70	V	-10 to +200		
Turcon® T40 For lubricating and non-lubricating fluids High frequency and short strokes **Water hydraulics** Surface texture is not suitable for gas sealing Carbon fibre filled Colour: Grey	T40	NBR - 70	N	-30 to +100	Steel Steel hardened Steel chrome plated (rod) Cast iron Stainless steel Aluminium	25
		NBR - 70 Low temp.	T	-45 to +80		
		FKM - 70	V	-10 to +200		
		EPDM - 70	E**	-45 to +145		
Turcon® T46 For lubricated hydraulics in linear motion High compressive strength High extrusion resistance Very good sliding and wear properties BAM tested Bronze filled Colour: Light to dark brown, which may have variations in shading	T46	NBR - 70	N	-30 to +100	Steel hardened Steel chrome plated (rod) Cast iron	50
		NBR - 70 Low temp.70	T	-45 to +80		
		FKM - 70	V	-10 to +200		
Zurcon® Z51*** For mineral oil based fluids **Very high abrasion and extrusion resistance** For counter surface with rougher surface finish Limited chemical resistance Max. working temperature 110 °C Cast polyurethane Colour: Yellow to light-brown	Z51	NBR - 70	N	-30 to +100	Steel Steel hardened Steel chrome plated (rod) Cast iron Stainless steel Ceramic coating	60
		NBR - 70 Low temp.	T	-45 to +80		
Zurcon® Z80 For lubricating and non-lubricating fluids Water based fluids, air and gases Dry air pneumatics High abrasion and extrusion resistance For service in abrasive conditions and media with particles Good chemical resistance Limited temperature capability (-60 to +80 °C) UHMWPE (Ultra High Molecular Weight Polyethylene) Colour: White to off-white	Z80	NBR - 70	N	-30 to (+100)	Steel Steel hardened Steel chrome plated (rod) Stainless steel Aluminium Ceramic coating	35
		NBR - 70 Low temp.	T	-45 to +80		
		EPDM- 70	E**	-45 to(+145)		

* The O-Ring Operation Temperature is only valid in mineral hydraulic oil (except EPDM). ** Material not suitable for mineral oils.
*** max. Ø 2300 mm BAM: Tested by "Bundesanstalt Materialprüfung, Germany". Highlighted materials are standard.

■ Installation Recommendation

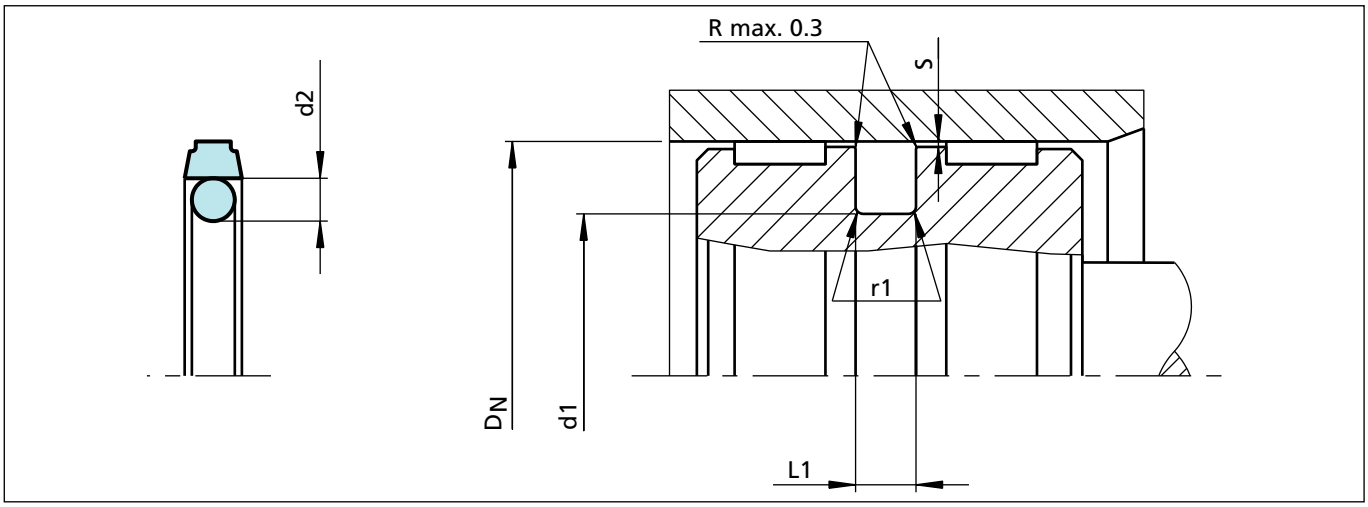

Figure 17 Installation drawing

Table XIV Installation Dimensions – Standard recommendations

Series-No.	Bore Diameter D_N H9			Groove Diameter	Groove Width	Radius	Radial Clearance S max.*			O-Ring Cross-Sec.
	Standard Application	Light Application	Heavy Duty Application	d_1 h9	L_1 +0.2	r_1	10 MPa	20 MPa	40 MPa	d_2
PT00	8 - 14.9	15 - 39.9	--	D_N - 4.9	2.2	0.4	0.40	0.30	0.20	1.78
PT01	15 - 39.9	40 - 79.9	--	D_N - 7.5	3.2	0.6	0.60	0.50	0.30	2.62
PT02	40 - 79.9	80 - 132.9	15 - 39.9	D_N - 11.0	4.2	1.0	0.70	0.50	0.30	3.53
PT03	80 - 132.9	133 - 329.9	40 - 79.9	D_N - 15.5	6.3	1.3	0.80	0.60	0.40	5.33
PT04	133 - 329.9	330 - 669.9	80 - 132.9	D_N - 21.0	8.1	1.8	0.80	0.60	0.40	7.00
PT08	330 - 669.9	670 - 999.9	133 - 329.9	D_N - 24.5	8.1	1.8	0.90	0.70	0.50	7.00
PT05	670 - 999.9	--	310 - 669.9	D_N - 28.0	9.5	2.5	1.00	0.80	0.60	8.40
PT05X	--	1000 - 1200	--	D_N - 28.0	9.5	2.5	1.00	0.80	0.60	8.40
PT06**	--	--	670 - 999.9	D_N - 38.0	13.8	3.0	1.20	0.90	0.70	12.00
PT06X**	1000 - 2700	--	--	D_N - 38.0	13.8	3.0	1.20	0.90	0.70	12.00

* At pressures **> 40 MPa** use diameter tolerance H8/f8 (bore/piston) in area of the seal or consult TSS for alternative material or profiles. TSS Slydring® / Wear Rings are not applicable at very small radical clearance S. Please consult the Slydring® catalog.
** O-Rings with 12 mm cross section are delivered as special profilring.

Ordering example

Turcon® Glyd Ring® T, complete with O-Ring, standard application, series PT03 (from Table XIV).
Bore diameter: D_N = 80.0 mm
TSS Part No.: PT0300800 (from Table XV)

Select the material from Table XIII. The corresponding code numbers are appended to the TSS Part No. (from Table XV). Together they form the TSS Article No.
For all intermediate sizes not shown in Table XV, the TSS Article No. can be determined from the example opposite.

TSS Article No. PT03 0 0800 - M12 N

- TSS Series No.
- Type (Standard)
- Cylinder diameter x 10***
- Quality Index (Standard)
- Material code (Seal ring)
- Material code (O-Ring)

*** For diameters ≥ 1000.0 mm multiply only by factor 1.
Example: PT06 for diameter 1200.0 mm.
TSS Article No.: PT06**X1200** - M12N.

Table XV Installation dimensions / TSS Part No.

Bore Dia. D_N H9	Groove Dia. d1 h9	Groove Width L_1 +0.2	TSS Part No.	O-Ring Dimensions
8.0	3.1	2.2	PT0000080	2.90 x 1.78
10.0	5.1	2.2	PT0000100	4.80 x 1.8
12.0	7.1	2.2	PT0000120	6.70 x 1.8
14.0	9.1	2.2	PT0000140	8.75 x 1.8
15.0	7.5	3.2	PT0100150	7.59 x 2.62
16.0	**11.1**	**2.2**	**PT0000160**	**10.82 x 1.78**
16.0	**8.5**	**3.2**	**PT0100160**	**7.59 x 2.62**
18.0	13.1	2.2	PT0000180	12.42 x 1.78
18.0	10.5	3.2	PT0100180	9.19 x 2.62
19.05	11.55	3.2	PT0100190	10.77 x 2.62
20.0	**15.1**	**2.2**	**PT0000200**	**14.00 x 1.78**
20.0	**12.5**	**3.2**	**PT0100200**	**12.37 x 2.62**
21.0	13.5	3.2	PT0100210	12.37 x 2.62
22.0	17.1	2.2	PT0000220	17.17 x 1.78
22.0	14.5	3.2	PT0100220	13.94 x 2.62
24.0	16.5	3.2	PT0100240	15.54 x 2.62
25.0	20.1	2.2	PT0000250	18.77 x 1.78
25.0	**17.5**	**3.2**	**PT0100250**	**17.12 x 2.62**
25.0	**14.0**	**4.2**	**PT0200250**	**13.87 x 3.53**
25.4	20.5	2.2	PT0000254	17.12 x 2.62
28.0	20.5	3.2	PT0100280	20.29 x 2.62
30.0	22.5	3.2	PT0100300	21.89 x 2.62
32.0	27.1	2.2	PT0000320	26.70 x 1.78
32.0	**24.5**	**3.2**	**PT0100320**	**23.47 x 2.62**
32.0	**21.0**	**4.2**	**PT0200320**	**20.22 x 3.53**
35.0	27.5	3.2	PT0100350	26.64 x 2.62
35.0	24.0	4.2	PT0200350	23.40 x 3.53
36.0	28.5	3.2	PT0100360	28.24 x 2.62
38.0	30.5	3.2	PT0100380	29.82 x 2.62
40.0	**32.5**	**3.2**	**PT0100400**	**31.42 x 2.62**
40.0	**29.0**	**4.2**	**PT0200400**	**28.17 x 3.53**
42.0	31.0	4.2	PT0200420	29.75 x 3.53
44.45	36.95	3.2	PT0100444	36.17 x 2.62
45.0	34.0	4.2	PT0200450	32.92 x 3.53
48.0	37.0	4.2	PT0200480	36.09 x 3.53
50.0	42.5	3.2	PT0100500	40.94 x 2.62
50.0	**39.0**	**4.2**	**PT0200500**	**37.70 x 3.53**
50.0	**34.5**	**6.3**	**PT0300500**	**32.69 x 5.33**
50.8	43.3	3.2	PT0100508	42.52 x 2.62
50.8	39.8	4.2	PT0200508	37.70 x 3.53
52.0	41.0	4.2	PT0200520	40.87 x 3.53
53.0	42.0	4.2	PT0200530	40.87 x 3.53
55.0	44.0	4.2	PT0200550	44.04 x 3.53
57.0	46.0	4.2	PT0200570	44.04 x 3.53
58.0	47.0	4.2	PT0200580	47.22 x 3.53
60.0	49.0	4.2	PT0200600	47.22 x 3.53
62.0	51.0	4.2	PT0200620	50.39 x 3.53
63.0	**52.0**	**4.2**	**PT0200630**	**50.39 x 3.53**

Turcon® Glyd Ring® T

Bore Dia. D_N H9	Groove Dia. d1 h9	Groove Width L_1 +0.2	TSS Part No.	O-Ring Dimensions
63.0	**47.5**	**6.3**	**PT0300630**	**46.99 x 5.33**
65.0	54.0	4.2	PT0200650	53.57 x 3.53
68.0	57.0	4.2	PT0200680	56.74 x 3.53
70.0	59.0	4.2	PT0200700	56.74 x 3.53
70.0	54.5	6.3	PT0300700	53.34 x 5.33
75.0	64.0	4.2	PT0200750	63.09 x 3.53
75.0	59.5	6.3	PT0300750	56.52 x 3.53
80.0	**69.0**	**4.2**	**PT0200800**	**66.27 x 3.53**
80.0	**64.5**	**6.3**	**PT0300800**	**62.87 x 5.33**
80.0	59.0	8.1	PT0400800	58 x 7.0
82.5	67.0	6.3	PT0300825	66.04 x 5.33
85.0	69.5	6.3	PT0300850	69.22 x 5.33
85.0	64.0	8.1	PT0400850	63 x 7.0
90.0	79.0	4.2	PT0200900	78.97 x 3.53
90.0	74.5	6.3	PT0300900	72.39 x 5.33
90.0	69.0	8.1	PT0400900	68 x 7.0
95.0	84.0	4.2	PT0200950	82.14 x 3.53
95.0	79.5	6.3	PT0300950	78.74 x 5.33
95.0	74.0	8.1	PT0400950	73 x 7.0
100.0	89.0	4.2	PT0201000	88.49 x 3.53
100.0	**84.5**	**6.3**	**PT0301000**	**81.92 x 5.33**
100.0	79.0	8.1	PT0401000	78 x 7.0
101.6	86.1	6.3	PT0301016	85.09 x 5.33
105.0	94.0	4.2	PT0201050	91.67 x 3.53
105.0	89.5	6.3	PT0301050	88.27 x 5.33
108.0	92.5	6.3	PT0301080	91.44 x 5.33
110.0	99.0	4.2	PT0201100	98.02 x 3.53
110.0	94.5	6.3	PT0301100	91.44 x 5.33
110.0	89.0	8.1	PT0401100	88 x 7.0
115.0	99.5	6.3	PT0301150	97.79 x 5.33
120.0	109.0	4.2	PT0201200	107.54 x 3.53
120.0	104.5	6.3	PT0301200	100.97 x 5.33
120.0	99.0	8.1	PT0401200	98 x 7.0
125.0	114.0	4.2	PT0201250	113.89 x 3.53
125.0	**109.5**	**6.3**	**PT0301250**	**107.32 x 5.33**
125.0	**104.0**	**8.1**	**PT0401250**	**103 x 7.0**

Bore Dia. D_N H9	Groove Dia. d1 h9	Groove Width L_1 +0.2	TSS Part No.	O-Ring Dimensions
127.0	111.5	6.3	PT0301270	110.49 x 5.33
130.0	114.5	6.3	PT0301300	113.67 x 5.33
130.0	109.0	8.1	PT0401300	108 x 7.0
132.0	121.0	4.2	PT0201320	120.24 x 3.53
135.0	114.0	8.1	PT0401350	113.67 x 7.0
140.0	124.5	6.3	PT0301400	123.19 x 5.33
140.0	119.0	8.1	PT0401400	116.84 x 7.0
145.0	129.5	6.3	PT0301450	126.37 x 5.33
145.0	124.0	8.1	PT0401450	123.19 x 7.0
150.0	134.5	6.3	PT0301500	132.72 x 5.33
150.0	129.0	8.1	PT0401500	126.37 x 7.0
155.0	134.0	8.1	PT0401550	132.72 x 7.0
160.0	**144.5**	**6.3**	**PT0301600**	**142.24 x 5.33**
160.0	**139.0**	**8.1**	**PT0401600**	**135.89 x 7.0**
165.0	144.0	8.1	PT0401650	142.24 x 7.0
170.0	149.0	8.1	PT0401700	145.42 x 7.0
175.0	154.0	8.1	PT0401750	151.77 x 7.0
180.0	164.5	6.3	PT0301800	164.47 x 5.33
180.0	159.0	8.1	PT0401800	158.12 x 7.0
190.0	169.0	8.1	PT0401900	164.47 x 7.0
194.0	178.5	6.3	PT0301940	177.17 x 5.33
200.0	**184.5**	**6.3**	**PT0302000**	**183.52 x 5.33**
200.0	**179.0**	**8.1**	**PT0402000**	**177.17 x 7.0**
205.0	184.0	8.1	PT0402050	183.52 x 7.0
210.0	189.0	8.1	PT0402100	183.52 x 7.0
215.0	194.0	8.1	PT0402150	189.87 x 7.0
220.0	199.0	8.1	PT0402200	196.22 x 7.0
230.0	214.5	6.3	PT0302300	208.92 x 5.33
230.0	209.0	8.1	PT0402300	208.92 x 7.0
240.0	219.0	8.1	PT0402400	215.27 x 7.0
250.0	**229.0**	**8.1**	**PT0402500**	**227.97 x 7.0**
250.0	**225.5**	**8.1**	**PT0802500**	**215.27 x 7.0**
250.0	134.5	6.3	PT0302500	234.32 x 5.33
254.0	233.0	8.1	PT0402540	227.97 x 7.0
260.0	239.0	8.1	PT0402600	240.67 x 7.0
265.0	244.0	8.1	PT0402650	240.67 x 7.0

Bore Dia.	Groove Dia.	Groove Width	TSS Part No.	O-Ring Dimensions
D_N H9	**d1** h9	L_1 +0.2		
268.0	247.0	8.1	PT0402680	240.67 x 7.0
270.0	249.0	8.1	PT0402700	240.67 x 7.0
280.0	259.0	8.1	PT0402800	253.37 x 7.0
290.0	269.0	8.1	PT0402900	266.07 x 7.0
300.0	279.0	8.1	PT0403000	278.77 x 7.0
300.0	275.5	8.1	PT0803000	266.07 x 7.0
304.8	283.8	8.1	PT0403048	278.77 x 7.0
310.0	289.0	8.1	PT0403100	278.77 x 7.0
320.0	**299.0**	**8.1**	**PT0403200**	**291.47 x 7.0**
320.0	**295.5**	**8.1**	**PT0803200**	**291.47 x 7.0**
330.0	305.5	8.1	PT0803300	304.17 x 7.0
340.0	315.5	8.1	PT0803400	316.87 x 7.0
350.0	325.5	8.1	PT0803500	316.87 x 7.0
360.0	335.5	8.1	PT0803600	329.57 x 7.0
370.0	345.5	8.1	PT0803700	342.27 x 7.0
380.0	355.5	8.1	PT0803800	354.97 x 7.0
400.0	**375.5**	**8.1**	**PT0804000**	**367.67 x 7.0**
420.0	395.5	8.1	PT0804200	393.07 x 7.0
430.0	405.5	8.1	PT0804300	405.26 x 7.0
440.0	415.5	8.1	PT0804400	405.26 x 7.0
450.0	425.5	8.1	PT0804500	417.96 x 7.0
460.0	435.5	8.1	PT0804600	430.66 x 7.0
480.0	455.5	8.1	PT0804800	456.06 x 7.0
500.0	**475.5**	**8.1**	**PT0805000**	**468.76 x 7.0**
555.0	530.5	8.1	PT0805550	506.86 x 7.0
600.0	575.5	8.1	PT0806000	557.66 x 7.0
640.0	615.5	8.1	PT0806400	608.08 x 7.0
660.0	635.5	8.1	PT0806600	633.48 x 7.0
700.0	672.0	9.5	PT0507000	670 x 8.4
710.0	682.0	9.5	PT0507100	680 x 8.4
740.0	712.0	9.5	PT0507400	710 x 8.4
780.0	752.0	9.5	PT0507800	750 x 8.4
800.0	772.0	9.5	PT0508000	770 x 8.4
900.0	872.0	9.5	PT0509000	870 x 8.4
1000.0	972.0	9.5	PT05X1000	970 x 8.4
1000.0	962.0	13.8	PT06X1000	960 x 12.0

Bore Dia.	Groove Dia.	Groove Width	TSS Part No.	O-Ring Dimensions
D_N H9	**d1** h9	L_1 +0.2		
1050.0	1022.0	9.5	PT05X1050	1020 x 8.4
1065.0	1027.0	13.8	PT06X1065	1025 x 12.0
1070.0	1032.0	13.8	PT06X1070	1030 x 12.0
1200.0	1172.0	9.5	PT05X1200	1170 x 8.4
1200.0	1162.0	13.8	PT06X1200	1160 x 12.0
1225.0	1187.0	13.8	PT06X1225	1185 x 12.0
1500.0	1462.0	13.8	PT06X1500	1460 x 12.0
2000.0	1962.0	13.8	PT06X2000	1960 x 12.0
2700.0	2662.0	13.8	PT06X2700	2660 x 12.0

All dimensions in **bold** type are suitable for installation in grooves to ISO 7425/1, bore dia. in accordance with ISO 3320. Other dimensions and all intermediate sizes up to 2700 mm dia. including inch sizes can be supplied.

All O-Rings with 12 mm cross section are delivered as special profilring.

Zurcon® Glyd Ring® P

Double Acting

Rubber Energized Plastic Faced Seal

Step Cut Sealing Element

Material:
Zurcon® Polyamid + NBR

■ Zurcon® Glyd Ring® P

Description

The doubleacting Zurcon® Glyd Ring® P is a combination of a Zurcon® based material slipper seal with a step cut and an energising rectangular elastomeric ring. It is produced with an interference fit at closed step cut which together with the squeeze of the rectangular energiser ring ensures a good sealing effect even at low pressure.

At higher system pressures, the rectangular ring is energised by the fluid, pushing the Zurcon® Glyd Ring® P against the sealing face with increased force. At high peak pressures, the Zurcon® step cut seal ring can follow ballooning of the tube without loosing the sealability.

Due to the Zurcon® high strength plastic material, two times bigger extrusion gaps are possible compared with Turcon® materials. The step cut in the ring is necessary for installation in closed grooves and for the flexibility of the seal ring due to the high stiffness of the material.

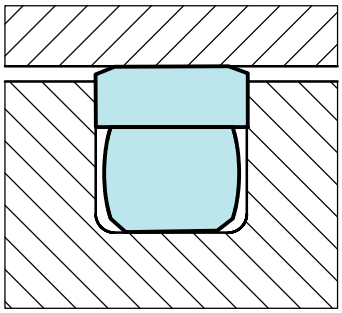

Figure 18 Zurcon® Glyd Ring® P

Step Cut

For easy installation on the piston and for the flexibility of the seal ring a precision step cut is produced by special tool technology.

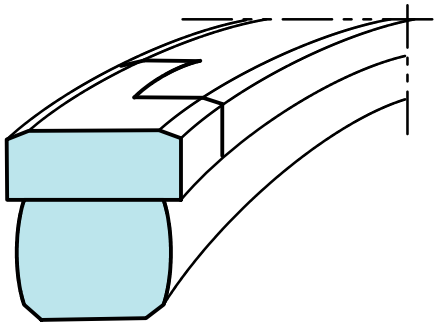

Figure 19 Step cut on Zurcon® Glyd Ring® P

Advantages

- Easy installation on piston without special tools
- Due to large extrusion gap, safe use even with soiled media
- Installation grooves acc. to ISO 7425/1
- Simple groove design, one piece piston possible
- Increased clearance compare to Turcon® Glyd Ring® seals
- (Approx. +50%), depending on operation conditions
- Resistent against shock loads
- High wear resistant material ensures long service life

Application Examples

- Construction machinery, e.g. excavators
- Truck cranes
- Fork lifts

It is particularly recommended for heavy duty applications.

Technical Data

Operating conditions:

Zurcon® Glyd Ring® P is recommended for reciprocating (with a length of stroke at least twice the groove width) movements where the dimensional gap between piston and tube shall be as big as possible or where high pressure peaks occure during operation.

Pressure:	50 MPa standard 100 MPa pressure peak
Speed:	up to 1 m/s
Temperature:	-30 °C to +110 °C standard -40 °C to +100 °C and -15 °C to +140 °C on request with special materials
Media:	mineral oil based hydraulic fluids

Important Note:
The above data are maximum values and cannot be used at the same time. e.g. the maximum operating speed depends on material type, pressure, temperature and gap value.

Materials

Standard Application:

- For hydraulic components in mineral oils or medias with good lubricating performance.

Zurcon® seal ring:	Zurcon® Z66
Energiser:	Rectangular ring in NBR 70 shore A, code N
Set reference:	Z66 N

Low temperature application:

Zurcon® seal ring:	Zurcon® Z66
Energiser:	Rectangular ring in low temp. NBR 70 shore A, code T
Set reference:	Z66 T

High temperature application:

Zurcon® seal ring:	Zurcon® Z66
Energiser:	Rectangular ring in FKM 70 shore A, code V
Set reference:	Z66 V

■ Installation Recommendation

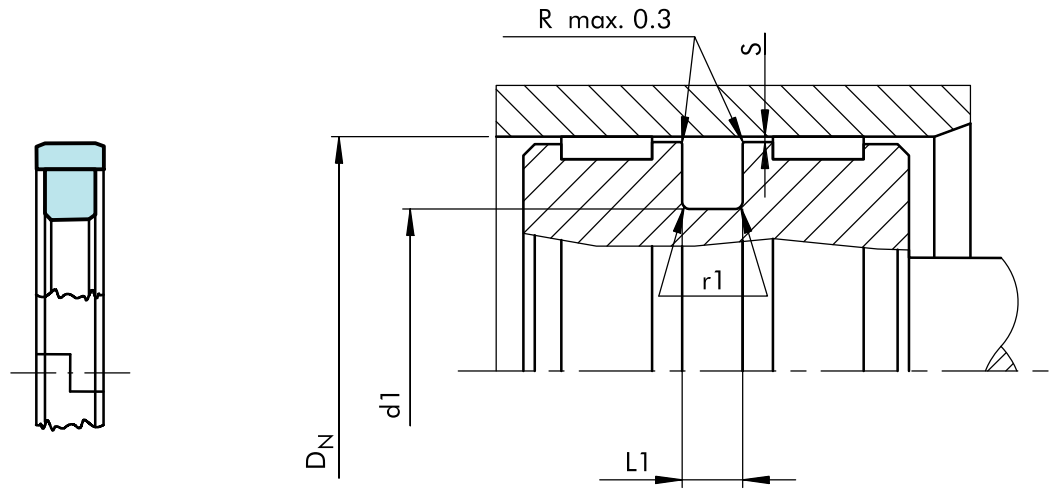

Figure 20 Installation drawing

Table XVI Installation dimensions

Series No.	Groove Diameter	Groove Width	Radius	Radial Clearance
	d_1 h9	L_1 +/-0.1	r_1	$S_{max.}$
PGP2	D_N - 11.0	4.2	0.5	0.35
PGP3	D_N - 15.5	6.3	0.9	0.50
PGP4	D_N - 21.0	8.1	0.9	0.60

Ordering example

Zurcon® Glyd Ring® P for ISO groove
Cylinder bore diameter: D_N = 125 mm
Series No. PGP4
Part No. PGP401250 (from Table XVII)
TSS seal ring
material code Z66
Energiser material code: N
Set code: Z66 N

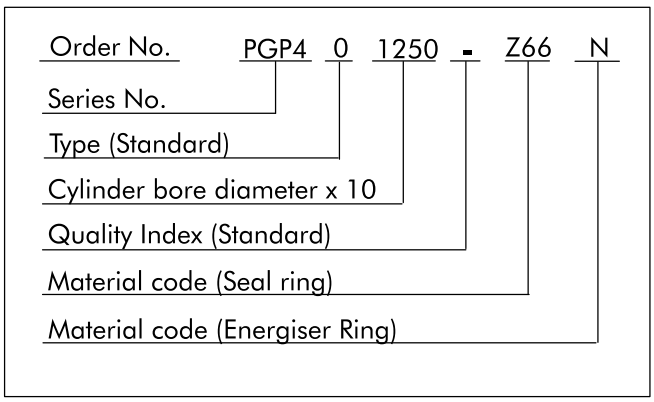

Table XVII Preferred Series / TSS Part No.

Bore Diameter	Groove Diameter	Groove Width	TSS Part No.
D_N H9	**d1** h9	**L1** +/-0.1	
45.0	34.0	4.2	PGP200450-Z66N
60.0	49.0	4.2	PGP200600-Z66N
70.0	54.5	6.3	PGP300700-Z66N
75.0	54.0	8.1	PGP400750-Z66N
80.0	59.0	8.1	PGP400800-Z66N
90.0	74.5	6.3	PGP300900-Z66N
90.0	69.0	8.1	PGP400900-Z66N
100.0	**84.5**	**6.3**	**PGP301000-Z66N**
100.0	79.0	8.1	PGP401000-Z66N
110.0	94.5	6.3	PGP301100-Z66N
110.0	89.0	8.1	PGP401100-Z66N
120.0	99.0	8.1	PGP401200-Z66N
125.0	**109.5**	**6.3**	**PGP301250-Z66N**
125.0	**104.0**	**8.1**	**PGP401250-Z66N**
130.0	109.0	8.1	PGP401300-Z66N
140.0	119.0	8.1	PGP401400-Z66N
150.0	129.0	8.1	PGP401500-Z66N
160.0	**139.0**	**8.1**	**PGP401600-Z66N**
170.0	149.0	8.1	PGP401700-Z66N
180.0	159.0	8.1	PGP401800-Z66N
190.0	169.0	8.1	PGP401900-Z66N

All dimensions in **bold** are suitable for installation in grooves to ISO 7425/1, bore dia. in accordance with ISO 3320
Further sizes on request

Turcon® AQ-Seal® 5

Double Acting

Rubber Energized Plastic Faced Seal

Material:
Turcon®, Zurcon® and Elastomer

■ Turcon® AQ-Seal® 5*

Description

The Turcon® AQ-Seal® 5 is a patented development of the proven standard Turcon® AQ-Seal®.

The seal profile of the Turcon® ring has been redesigned on both the dynamic and static sealing surface. Two O-Rings are used to energize the seal instead of one.

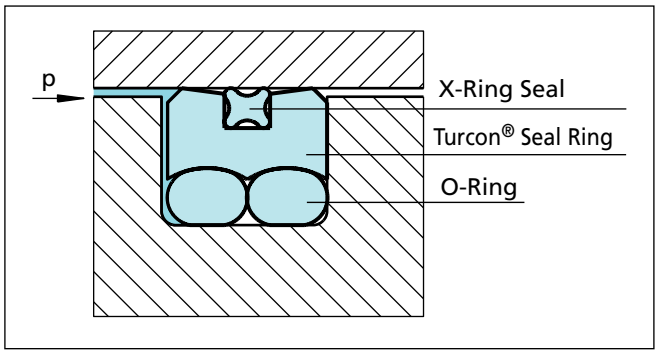

Figure 21 Turcon® AQ-Seal® 5

The AQ-Seal® 5 combines the benefits of a low-friction Turcon® slipper seal with the high sealing characteristics of an elastomeric seal by incorporating a limited foot print X-Ring Seal in the dynamic sealing face. This optimizes leakage control while minimizing friction.

The particular characteristics of the AQ-Seal® 5 are the special seal profile with a defined seal edge and the use of two O-Rings as energizing elements to optimize the pressure profile and to reduce the force of attack at gas permeability.

* Patent No. EP 0 424 372

Advantages

- High sealing effect in applications requiring media separation, e.g. fluid/fluid or fluid/gas
- Double security through the combination of low-friction special materials with elastomer seals
- Low gas permeation rate
- Higher pressure application, higher sliding speed compared to the AQ-Seal®
- Outstanding sliding properties, no stick-slip effect.

Application Examples

The Turcon® AQ-Seal® 5 mainly designed for heavy duty and large diameter applications and is recommended as double acting piston seal for hydraulic equipment such as:

- Machine tools
- Presses
- Rolling mills
- Mobile cranes
- Off-road hydro-pneumatic suspensions
- Servo hydraulics
- Offshore equipment
- Jacks

For Semi-static Piston Accumulators see page 51 Turcon® AQ-Seal® and for High Performance Piston Accumulators a further development is available i.e. Special Turcon® AQ Seal, see page189.

Technical Data

Operating conditions

Pressure:	Up to 60 MPa with mineral oil Up to 25 MPa for media with reduced lubricating properties
Speed:	Up to 3 m/s with reciprocating movements frequency up to 3 Hz
Temperature:	-30 °C to +200 °C *) (depending on O-Ring and X-Ring Seal material) (For applications at temperatures below -30 °C, please contact your local TSS Company).
Media:	Mineral oil-based hydraulic fluids, flame retardant hydraulic fluids, environmentally safe hydraulic fluids (bio-oils), phosphate ester, water and others, depending on the seal and O-Ring and X-Ring Seal material compatibility (see Table XVIII)
Clearance:	The maximum permissible radial clearance S_{max} is shown in Table XIX, as a function of the operating pressure and functional diameter.

Important Note:
The above data are maximum values and cannot be used at the same time. e.g. the maximum operating speed depends on material type, pressure, temperature and gap value. Temperature range also dependent on medium.

*) in the case of unpressurized applications in temperatures below 0°C please contact our application engineers for assistance!

Materials

The following material combinations have proven effective for hydraulic applications:

For light to heavy applications with reciprocating movements in mineral oils and other media with good lubrication:

All round material for hydraulic applications with reciprocating, short stroke or helical movements in mineral oils, flame retardant hydraulic fluids HFC, phosphate ester, bio-oils or fluids having less satisfactory lubricating properties:

Turcon® AQ-Seal® 5:	Turcon® M12	
O-Ring and X-Ring:	NBR, 70 Shore A	N
	FKM, 70 Shore A	V
Set code:	M12N or M12V	

For medium to heavy applications with reciprocating movements in mineral oils and other media with good lubrication:

Turcon® AQ-Seal® 5:	Turcon® T46	
O-Ring and X-Ring:	NBR, 70 Shore A	N
	FKM, 70 Shore A	V
Set code:	T46N or T46V	

For specific applications, all Turcon® materials are available. Other viable material combinations are listed in Table XVIII.

Table XVIII Turcon® Materials for AQ-Seal® 5

Material, Applications, Properties	Code	O-Ring Material Shore A	Code	O-Ring Operating Temp.* °C	Mating Surface Material	MPa max Dynamic
Turcon® M12 **First material choice** for seals in linear motion Overall improved properties For new constructions and updating For all commonly applied hydraulic fluids including fluids with low lubrication performance Lowest friction and best sliding properties Lowest wear on seals Improved absorption of abrasive contaminants No wear or abrasion of counter surface Mineral fibre and Additives filled Colour: Dark grey	M12	NBR - 70	N	-30 to +100	Steel Steel hardened Steel chrome plated (rod) Steel plated (rod) Cast iron Stainless steel Titanium	50
		NBR - 70 Low temp.	T	-45 to +80		
		FKM - 70	V	-10 to +200		
Turcon® T08 For lubricating fluids and linear motion **Very high compressive strength and extrusion resistance** Hard counter surfaces is recommended Bronze filled Colour: Light to dark brown, which may have variations in shading	T08	NBR - 70	N	-30 to +100	Steel hardened Steel chrome plated (rod) Cast iron	60
		NBR - 70 Low temp.	T	-45 to +80		
		FKM - 70	V	-10 to +200		
Turcon® T10 For hydraulic and pneumatic For linear motion in lubricating and non-lubricating fluids High extrusion resistance Good chemical resistance Not for electrically conducting fluids Carbon, graphite filled Colour: Black	T10	NBR - 70	N	-30 to +100	Steel Steel chrome plated (rod) Stainless steel	40
		NBR - 70 Low temp.	T	-45 to +80		
		FKM - 70	V	-10 to +200		
		EPDM-70	E**	-45 to +145		
Turcon® T29 For lubricating and non-lubricating fluids Good extrusion resistance Surface texture is not suitable for gas sealing Not for electrically conducting fluids Carbon fibre filled Colour: Grey	T29	NBR - 70	N	-30 to +100	Steel Steel chrome plated (rod) Cast iron Stainless steel	30
		NBR - 70 Low temp.	T	-45 to +80		
		FKM - 70	V	-10 to +200		
		EPDM-70	E**	-45 to +145		
Turcon® T40 For lubricating and non-lubricating fluids High frequency and short strokes **Water hydraulics** Surface texture is not suitable for gas sealing Carbon fibre filled Colour: Grey	T40	NBR - 70	N	-30 to +100	Steel Steel chrome plated (rod) Cast iron Stainless steel Aluminium	25
		NBR - 70 Low temp.	T	-45 to +80		
		FKM - 70	V	-10 to +200		
		EPDM-70	E**	-45 to +145		
Turcon® T46 For lubricated hydraulics in linear motion High compressive strength High extrusion resistance Very good sliding and wear properties Bronze filled Colour: Light to dark brown, which may have variations in shading	T46	NBR - 70	N	-30 to +100	Steel hardened Steel chrome plated (rod) Cast iron	50
		NBR - 70 Low temp.	T	-45 to +80		
		FKM - 70	V	-10 to +200		

Material, Applications, Properties	Code	O-Ring Material Shore A	Code	O-Ring Operating Temp.* °C	Mating Surface Material	MPa max Dyna-mic
Zurcon® Z80 For lubricating and non-lubricating fluids Water based fluids, air and gases Dry air pneumatics High abrasion and extrusion resistance For service in abrasive conditions and media with particles Good chemical resistance Limited temperature capability (-60 to +80 °C) UHMWPE (Ultra High Molecular Weight Polyethylene) Colour: White to off-white	Z80	NBR - 70	N	-30 to (+100)	Steel Steel hardened Steel chrome plated (rod) Stainless steel Aluminium Ceramic coating	35
		NBR - 70 Low temp.	T	-45 to +80		
		EDPM - 70	E**	-10 to (+145)		

* The O-Ring Operation Temperature is only valid in mineral hydraulic oil (except EPDM). ** Material not suitable for mineral oils.
BAM: Tested by "Bundesanstalt Materialprüfung, Germany". Highlighted materials are standard.

■ Installation Recommendation

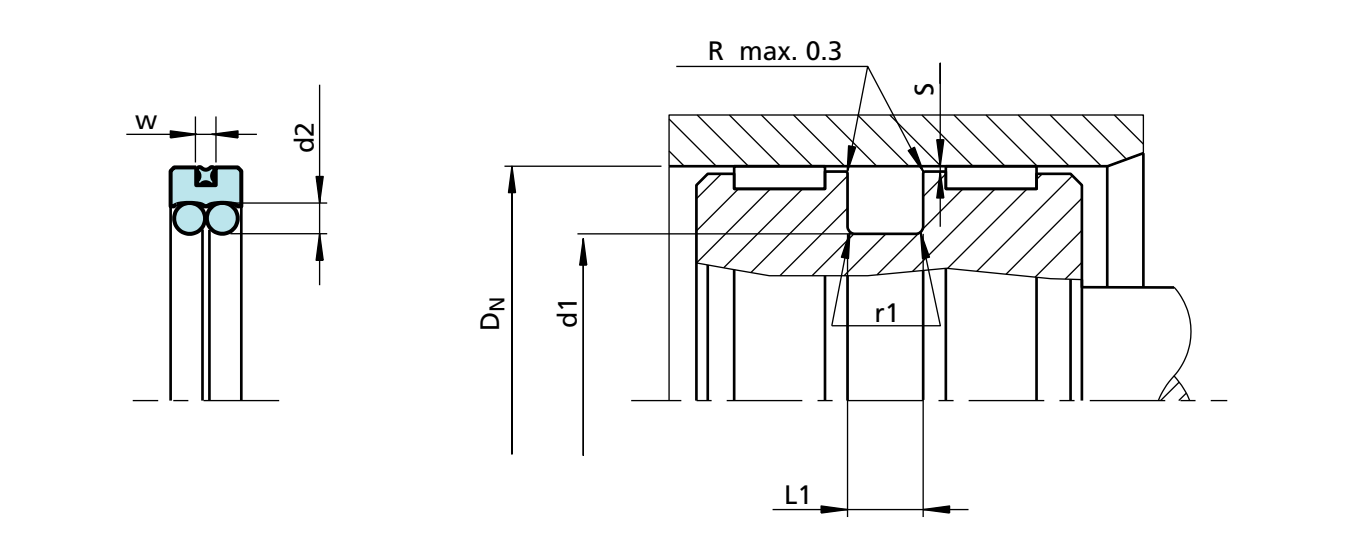

Figure 22 Installation drawing

Table XIX Installation dimensions

Series No.	Bore Diameter D_N H9		Groove Diameter	Groove Width	Radius	Radial Clearance S max.*			O-Ring Cross-Sec.	X-Ring Seal Cross Sec.
	Recommended Range	Extended Range	d_1 h9	L_1 +0.2	r_1	10 MPa	20 MPa	30 MPa	d_2	W
PQ01	40 - 79.9	25 - 140	D_N - 10.0	6.3	0.6	0.30	0.20	0.15	2.62	1.78
PQ02	80 - 132.9	50 - 250	D_N - 13.0	8.3	1.0	0.40	0.30	0.15	3.53	2.62
PQ03	133 - 462.9	100 - 480	D_N - 18.0	12.3	1.3	0.40	0.30	0.20	5.33	3.53
PQ04	463 - 700.0	425 - 700	D_N - 31.0	16.3	1.8	0.50	0.40	0.30	7.00	5.33

* At pressures **> 30 MPa** use diameter tolerance H8/f8 (bore/piston) in area of the seal or consult TSS for alternative material or profiles. TSS Slydring® / Wear Rings are not applicable at very small radical clearance S. Please consult the Slydring® catalog.

Ordering example

Turcon®AQ-Seal®5, complete with O-Ring and X-ring seal, recommended range, Series PQ02 (from Table XIX).
Bore diameter: D_N = 80.0 mm
TSS Part No. PQ0200800 (from Table XX)

Select the material from Table XVIII. The corresponding code numbers are appended to the TSS Part No. (from Table XX). Together they form the TSS Article No.
For all intermediate sizes not shown in Table XX, the TSS Article No. can be determined from the example opposite.

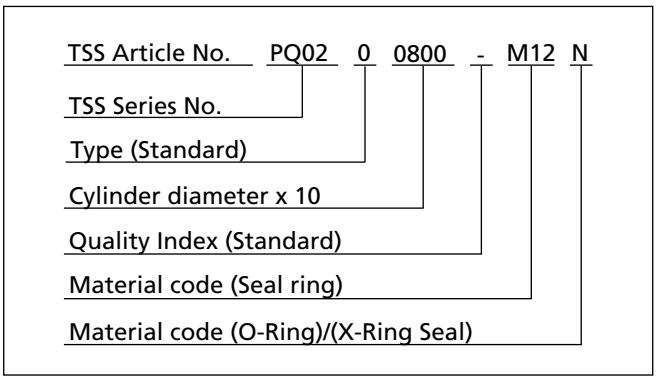

Table XX Installation dimensions / TSS Part No.

Bore Diameter	Groove Diameter	Groove Width	TSS Part No.	O-Ring Dimensions	X-Ring Dimensions
D_N H9	d_1 h9	L_1 +0.2			
40.0	**30.0**	**6.3**	**PQ0100400**	**29.82 x 2.62**	**34.65 x 1.78**
42.0	32.0	6.3	PQ0100420	31.42 x 2.62	37.82 x 1.78
45.0	35.0	6.3	PQ0100450	34.59 x 2.62	37.82 x 1.78
48.0	38.0	6.3	PQ0100480	37.77 x 2.62	41.00 x 1.78
50.0	**40.0**	**6.3**	**PQ0100500**	**39.34 x 2.62**	**44.17 x 1.78**
52.0	42.0	6.3	PQ0100520	40.94 x 2.62	47.35 x 1.78
55.0	45.0	6.3	PQ0100550	44.12 x 2.62	50.52 x 1.78
60.0	50.0	6.3	PQ0100600	48.90 x 2.62	53.70 x 1.78
63.0	**53.0**	**6.3**	**PQ0100630**	**52.07 x 2.62**	**56.87 x 1.78**
65.0	55.0	6.3	PQ0100650	53.64 x 2.62	60.05 x 1.78
70.0	60.0	6.3	PQ0100700	58.42 x 2.62	63.22 x 1.78
75.0	65.0	6.3	PQ0100750	63.17 x 2.62	69.57 x 1.78
80.0	**67.0**	**8.3**	**PQ0200800**	**66.27 x 3.53**	**71.12 x 2.62**
85.0	72.0	8.3	PQ0200850	69.44 x 3.53	75.87 x 2.62
90.0	77.0	8.3	PQ0200900	75.79 x 3.53	82.22 x 2.62
95.0	82.0	8.3	PQ0200950	78.97 x 3.53	82.22 x 2.62
100.0	**87.0**	**8.3**	**PQ0201000**	**85.32 x 3.53**	**88.57 x 2.62**
105.0	92.0	8.3	PQ0201050	91.67 x 3.53	94.92 x 2.62
110.0	97.0	8.3	PQ0201100	94.84 x 3.53	101.27 x 2.62
115.0	102.0	8.3	PQ0201150	101.19 x 3.53	107.62 x 2.62
120.0	107.0	8.3	PQ0201200	104.37 x 3.53	107.62 x 2.62
125.0	**112.0**	**8.3**	**PQ0201250**	**110.72 x 3.53**	**113.97 x 2.62**
130.0	117.0	8.3	PQ0201300	113.89 x 3.53	120.32 x 2.62
135.0	117.0	12.3	PQ0301350	113.67 x 5.33	123.42 x 3.53
140.0	122.0	12.3	PQ0301400	120.02 x 5.33	126.60 x 3.53
150.0	132.0	12.3	PQ0301500	129.54 x 5.33	136.12 x 3.53
160.0	**142.0**	**12.3**	**PQ0301600**	**139.07 x 5.33**	**145.65 x 3.53**
170.0	152.0	12.3	PQ0301700	148.49 x 5.33	158.35 x 3.53
180.0	162.0	12.3	PQ0301800	158.12 x 5.33	164.70 x 3.53
190.0	172.0	12.3	PQ0301900	170.82 x 5.33	177.40 x 3.53
200.0	**182.0**	**12.3**	**PQ0302000**	**177.17 x 5.33**	**183.75 x 3.53**
210.0	192.0	12.3	PQ0302100	189.87 x 5.33	196.45 x 3.53
220.0	202.0	12.3	PQ0302200	196.22 x 5.33	202.80 x 3.53
230.0	212.0	12.3	PQ0302300	208.92 x 5.33	215.50 x 3.53
240.0	222.0	12.3	PQ0302400	221.62 x 5.33	221.85 x 3.53
250.0	**232.0**	**12.3**	**PQ0302500**	**227.97 x 5.33**	**234.55 x 3.53**

Bore diameters in **bold** type comply with the recommendations of ISO 3320.
All intermediate sizes up to 700 mm diameter can be supplied. Sizes > 700 mm diameter with special elastomers on request.

Bore Diameter	Groove Diameter	Groove Width	TSS Part No.	O-Ring Dimensions	X-Ring Dimensions
D_N H9	d_1 h9	L_1 +0.2			
280.0	262.0	12.3	PQ0302800	253.37 x 5.33	266.29 x 3.53
300.0	282.0	12.3	PQ0303000	278.77 x 5.33	278.99 x 3.53
320.0	**302.0**	**12.3**	**PQ0303200**	**291.47 x 5.33**	**304.39 x 3.53**
350.0	332.0	12.3	PQ0303500	329.57 x 5.33	329.79 x 3.53
400.0	**382.0**	**12.3**	**PQ0304000**	**380.37 x 5.33**	**380.59 x 3.53**
420.0	402.0	12.3	PQ0304200	405.26 x 5.33	380.59 x 3.53
450.0	432.0	12.3	PQ0304500	430.66 x 5.33	430.66 x 3.53
480.0	449.0	16.3	PQ0404800	443.36 x 7.0	456.06 x 5.33
500.0	**469.0**	**16.3**	**PQ0405000**	**468.76 x 7.0**	**456.06 x 5.33**
600.0	569.0	16.3	PQ0406000	557.66 x 7.0	557.58 x 5.33
700.0	669.0	16.3	PQ0407000	658.88 x 7.0	658.88 x 5.33

Bore diameters in **bold** type comply with the recommendations of ISO 3320.
All intermediate sizes up to 700 mm diameter can be supplied. Sizes > 700 mm diameter with special elastomers on request.

Turcon® AQ-Seal®

Double Acting

Rubber Energized Plastic Faced Seal

Material:
Turcon®, Zurcon® and Elastomer

■ Turcon® AQ-Seal®

Description

The Turcon® AQ-Seal® is a double-acting seal consisting of a seal ring of high-grade modified Turcon® material, a X-Ring Seal and an O-Ring as energizing element.

The Turcon® seal ring and the X-Ring Seal together assume the dynamic sealing function whilst the O-Ring performs the static sealing function.

Design

The AQ-Seal® is supplied as standard with radial notches on both sides. These ensure direct pressurizing of the seal under all operating conditions.

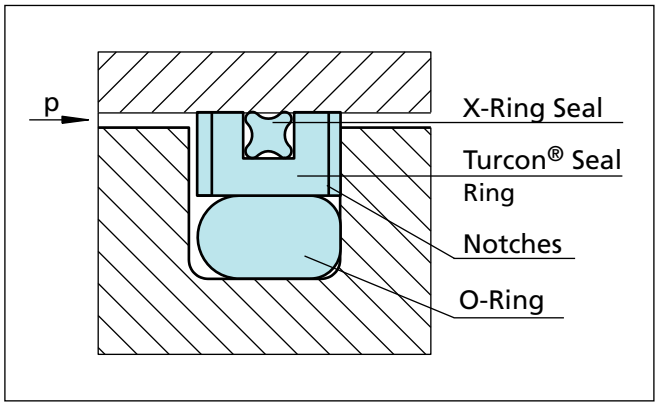

Figure 23 Turcon® AQ-Seal®

Advantages

- High sealing effect in applications requiring media separation, e.g. fluid/fluid or fluid/gas
- Double security through the combination of low-friction special materials with elastomer seals
- Simple groove design, small installation space, interchangeable with Turcon® Glyd Ring®, Turcon® Glyd Ring® T and Turcon® Stepseal®K installation according to ISO 7425/1
- Outstanding sliding properties, no stick-slip effect.

Application Examples

The Turcon® AQ-Seal® is the recommended sealing element for double acting pistons of positioning and holding cylinders for:

- Machine tools
- Presses
- Semi-static piston accumulators
- Active stabilizers
- Hydro-pneumatic suspensions for heavy vehicles
- Subsea connectors
- Offshore valves
- Wind Power
- Pressure intensifiers
- Jacks
- Lifts
- Hydraulic vices

For high performance Piston Accumulators a further development is available i.e. Special Turcon® AQ-Seal®, see page 189.

Technical Data

Operating conditions:

Pressure:	Up to 50 MPa with mineral oil Up to 30 MPa for media with reduced lubricating properties
Speed:	Up to 2 m/s with reciprocating movements
Temperature:	-45 °C to +200 °C *) (depending on O-Ring and X-Ring Seal material) (For applications at temperatures below -30 °C, please contact your local TSS Company).
Media:	Mineral oil-based hydraulic fluids, flame retardant hydraulic fluids, environmentally safe hydraulic fluids (bio-oils), phosphate ester, water and others, depending on the seal, O-Ring and X-Ring Seal material compatibility (see Table XXI) For piston accumulators in flame retardant fluids (HFA, HFC), media with reduced lubricating properties and gases a Special Turcon® AQ-Seal® version is available**)
Clearance:	The maximum permissible radial clearance Smax is shown in Table XXII, as a function of the operating pressure and functional diameter.

Important Note:
The above data are maximum values and cannot be used at the same time. e.g. the maximum operating speed depends on material type, pressure, temperature and gap value. Temperature range also dependent on medium.

*) In the case of unpressurized applications in temperatures below 0°C please contact our application engineers for assistance!

**) Please see page 189 and contact your local Trelleborg Sealing Solutions Company.

Materials

The following material combinations have proven effective for hydraulic applications:

All round material for hydraulic applications with reciprocating, short stroke or helical movements in mineral oils, flame retardant hydraulic fluids HFC, phosphate ester, bio-oils or fluids having less satisfactory lubricating properties:

Turcon® AQ-Seal®:	Turcon® M12	
O-Ring and X-Ring:	NBR, 70 Shore A FKM, 70 Shore A	N V
Set code:	M12N or M12V	

For medium to heavy applications with reciprocating movements in mineral oils and other media with good lubrication:

Turcon® AQ-Seal®:	Turcon® T46	
O-Ring and X-Ring:	NBR, 70 Shore A FKM, 70 Shore A	N V
Set code:	T46N or T46V	

For specific applications, all Turcon® materials are available. Other viable material combinations are listed in Table XXI.

Table XXI Turcon® material for AQ-Seal®

Material, Applications, Properties	Code	O-Ring Material Shore A	Code	O-Ring Operating Temp.* °C	Mating Surface Material	MPa max Dyna-mic
Turcon® M12 **First material choice** for seals in linear motion Overall improved properties For new constructions and updating For all commonly applied hydraulic fluids including fluids with low lubrication performance Lowest friction and best sliding properties Lowest wear on seals Improved absorption of abrasive contaminants No wear or abrasion of counter surface Mineral fibre and Additives filled Colour: Dark grey	M12	NBR - 70	N	-30 to +100	Steel Steel hardened Steel chrome plated (rod) Steel plated (rod) Cast iron Stainless steel Titanium	40
		NBR - 70 Low temp.	T	-45 to +80		
		FKM - 70	V	-10 to +200		
Turcon® T08 For lubricating fluids and linear motion **Very high compressive strength and extrusion resistance** Hard counter surfaces is recommended Bronze filled Colour: Light to dark brown, which may have variations in shading	T08	NBR - 70	N	-30 to +100	Steel hardened Steel chrome plated (rod) Cast iron	50
		NBR - 70 Low temp.	T	-45 to +80		
		FKM - 70	V	-10 to +200		
Turcon® T10 For hydraulic and pneumatic For linear motion in lubricating and non-lubricating fluids High extrusion resistance Good chemical resistance Not for electrically conducting fluids Carbon, graphite filled Colour: Black	T10	NBR - 70	N	-30 to +100	Steel Steel chrome plated (rod) Stainless steel	30
		NBR - 70 Low temp.	T	-45 to +80		
		FKM - 70	V	-10 to +200		
		EPDM-70	E**	-45 to +145		
Turcon® T29 For lubricating and non-lubricating fluids Good extrusion resistance Surface texture is not suitable for gas sealing Not for electrically conducting fluids Carbon fibre filled Colour: Grey	T29	NBR - 70	N	-30 to +100	Steel Steel chrome plated (rod) Cast iron Stainless steel	30
		NBR - 70 Low temp.	T	-45 to +80		
		FKM - 70	V	-10 to +200		
		EPDM-70	E**	-45 to +145		
Turcon® T40 For lubricating and non-lubricating fluids High frequency and short strokes **Water hydraulics** Surface texture is not suitable for gas sealing Carbon fibre filled Colour: Grey	T40	NBR - 70	N	-30 to +100	Steel Steel chrome plated (rod) Cast iron Stainless steel Aluminium	25
		NBR - 70 Low temp.	T	-45 to +80		
		FKM - 70	V	-10 to +200		
		EPDM-70	E**	-45 to +145		
Turcon® T46 For lubricated hydraulics in linear motion High compressive strength High extrusion resistance Very good sliding and wear properties Bronze filled Colour: Light to dark brown, which may have variations in shading	T46	NBR - 70	N	-30 to +100	Steel hardened Steel chrome plated (rod) Cast iron	40
		NBR - 70 Low temp.	T	-45 to +80		
		FKM - 70	V	-10 to +200		

Material, Applications, Properties	Code	O-Ring Material Shore A	Code	O-Ring Operating Temp.* °C	Mating Surface Material	MPa max Dyna-mic
Zurcon® Z80 For lubricating and non-lubricating fluids Water based fluids, air and gases Dry air pneumatics High abrasion and extrusion resistance For service in abrasive conditions and media with particles Good chemical resistance Limited temperature capability (-60 to +80 °C) UHMWPE (Ultra High Molecular Weight Polyethylene) Colour: White to off-white	Z80	NBR - 70	N	-30 to (+100)	Steel Steel hardened Steel chrome plated (rod) Stainless steel Aluminium Ceramic coating	30
		NBR - 70 Low temp.	T	-45 to +80		
		EDPM - 70	E**	-45 to (+145)		

* The O-Ring Operation Temperature is only valid in mineral hydraulic oil (except EPDM). ** Material not suitable for mineral oils.
BAM: Tested by "Bundesanstalt Materialprüfung, Germany". Highlighted materials are standard.

■ Installation Recommendation

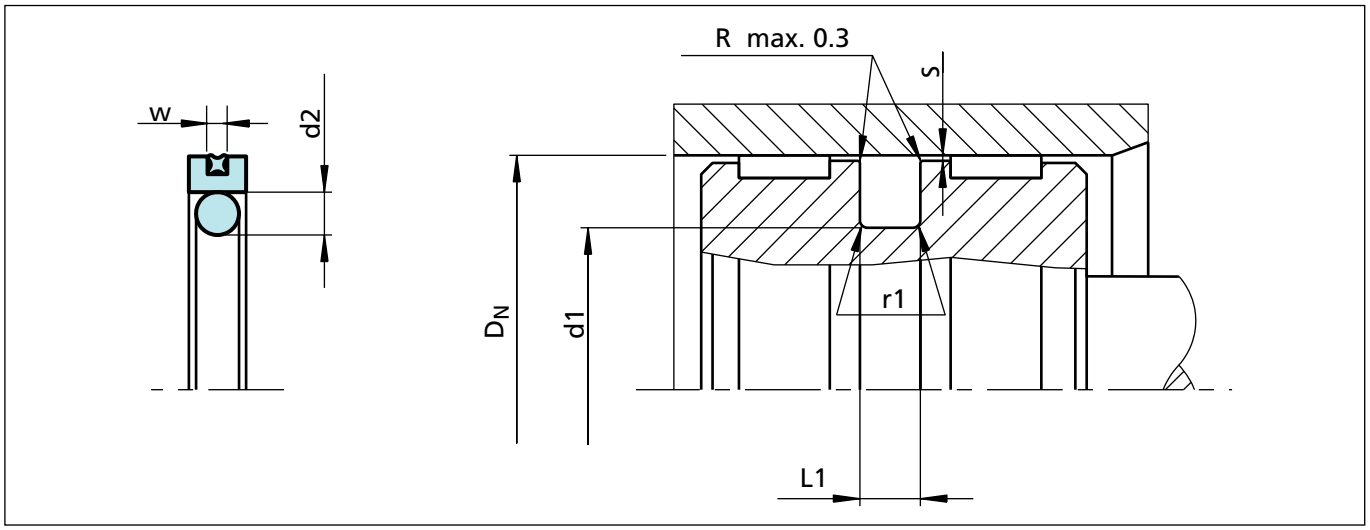

Figure 24 Installation drawing

Table XXII Installation dimensions

Bore Diameter D_N H9				Groove Dia.	Groove Width	Radius	Radial Clearance S max *			O-Ring Cross Section	X-Ring Seal Cross Section
Standard Application		Light Application									
Series No.	Diameter Range	Series No.	Diameter Range	d_1 h9	L_1 +0.2	r_1	10 MPa	20 MPa	40 MPa	d_2	W
PQ12	15 - 39.9	PQ14	40 - 79.9	D_N - 11.0	4.2	1.0	0.25	0.15	0.10	3.53	1.78
PQ12	40 - 79.9	PQ14	80 - 132.9	D_N - 15.5	6.3	1.3	0.30	0.20	0.15	5.33	1.78
PQ22	80 - 132.9	PQ24	133 - 252.9	D_N - 21.0	8.1	1.8	0.30	0.20	0.15	7.00	2.62
PQ22	133 - 252.9	PQ24	--	D_N - 24.5	8.1	1.8	0.30	0.20	0.15	7.00	2.62
PQ32	253 - 462.9	--	--	D_N - 28.0	9.5	2.5	0.45	0.30	0.25	8.40	3.53
PQ52	463 - 700.0	--	--	D_N - 35.0	11.5	3.0	0.55	0.40	0.35	10.00	5.33

* At pressures > 40 MPa use diameter tolerance H8/f8 (bore/piston) in area of the seal or use Turcon® AQ-Seal® 5 CR.
TSS Slydring® / Wear Rings are not applicable at very small radical clearance S. Please consult the Slydring® catalog.

Ordering example

Turcon® AQ-Seal®, complete with O-Ring and X-Ring Seal, recommended range, Series PQ22 (from Table XXII).
Bore diameter: D_N = 80.0 mm
TSS Part No. PQ2200800 (from Table XXIII)
Select the material from Table XXI. The corresponding code numbers are appended to the TSS Part No. (from Table XXIII). Together they form the TSS Article No.
For all intermediate sizes not shown in Table XXIII, the TSS Article No. can be determined from the example opposite.

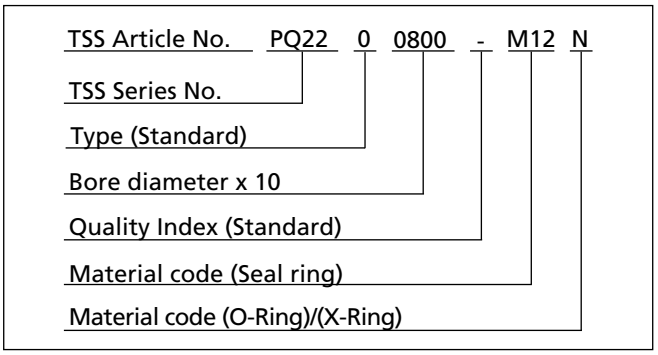

Table XXIII Installation dimensions / TSS Part No.

Bore Diameter	Groove Diameter	Groove Width	TSS Part No.	O-Ring Dimensions	X-Ring Dimensions
D_N H9	d_1 h9	L_1 +0.2			
16.0	5.0	4.2	PQ1200160	4.34 x 3.53	12.42 x 1.78
18.0	7.0	4.2	PQ1200180	6.42 x 3.53	14.00 x 1.78
20.0	9.0	4.2	PQ1200200	8.42 x 3.53	15.60 x 1.78
22.0	11.0	4.2	PQ1200220	10.69 x 3.53	17.17 x 1.78
25.0	**14.0**	**4.2**	**PQ1200250**	**13.87 x 3.53**	**20.35 x 1.78**
28.0	17.0	4.2	PQ1200280	15.47 x 3.53	23.52 x 1.78
30.0	19.0	4.2	PQ1200300	18.66 x 3.53	25.12 x 1.78
32.0	**21.0**	**4.2**	**PQ1200320**	**20.22 x 3.53**	**26.70 x 1.78**
35.0	24.0	4.2	PQ1200350	23.40 x 3.53	29.87 x 1.78
40.0	**29.0**	**4.2**	**PQ1400400**	**28.17 x 3.53**	**34.65 x 1.78**
42.0	31.0	4.2	PQ1400420	29.75 x 3.53	37.82 x 1.78
45.0	34.0	4.2	PQ1400450	32.92 x 3.53	37.82 x 1.78
48.0	37.0	4.2	PQ1400480	36.09 x 3.53	41.00 x 1.78
50.0	**39.0**	**4.2**	**PQ1400500**	**37.70 x 3.53**	**44.17 x 1.78**
50.0	**34.5**	**6.3**	**PQ1200500**	**32.69 x 5.33**	**44.17 x 1.78**
52.0	41.0	4.2	PQ1400520	40.87 x 3.53	47.35 x 1.78
55.0	44.0	4.2	PQ1400550	44.04 x 3.53	50.52 x 1.78
60.0	49.0	4.2	PQ1400600	47.22 x 3.53	53.70 x 1.78
63.0	**52.0**	**4.2**	**PQ1400630**	**50.39 x 3.53**	**56.87 x 1.78**
63.0	**47.5**	**6.3**	**PQ1200630**	**46.99 x 5.33**	**56.87 x 1.78**
65.0	54.0	4.2	PQ1400650	53.57 x 3.53	60.05 x 1.78
70.0	59.0	4.2	PQ1400700	56.74 x 3.53	63.22 x 1.78
70.0	54.5	6.3	PQ1200700	53.34 x 5.33	63.22 x 1.78
75.0	64.0	4.2	PQ1400750	63.09 x 3.53	69.57 x 1.78
80.0	**64.5**	**6.3**	**PQ1400800**	**62.87 x 5.33**	**72.75 x 1.78**
80.0	59.0	8.1	PQ2200800	58 x 7.0	71.12 x 2.62
85.0	69.5	6.3	PQ1400850	69.22 x 5.33	75.92 x 1.78
85.0	64.0	8.1	PQ2200850	63 x 7.0	75.87 x 2.62
90.0	74.5	6.3	PQ1400900	72.39 x 5.33	82.27 x 1.78
90.0	69.0	8.1	PQ2200900	68 x 7.0	82.22 x 2.62
95.0	79.5	6.3	PQ1400950	78.74 x 5.33	88.62 x 1.78
95.0	74.0	8.1	PQ2200950	73 x 7.0	82.22 x 2.62
100.0	**84.5**	**6.3**	**PQ1401000**	**81.92 x 5.33**	**88.62 x 1.78**
100.0	79.0	8.1	PQ2201000	78 x 7.0	88.57 x 2.62
105.0	89.5	6.3	PQ1401050	88.27 x 5.33	94.97 x 1.78
105.0	84.0	8.1	PQ2201050	83 x 7.0	94.92 x 2.62

The dimensions in **bold** type are suitable for grooves to ISO 7425/1. Bore diameter in accordance with ISO 3320.
All intermediate sizes up to 700 mm diameter can be supplied. Sizes > 700 mm diameter with special elastomers on request.

Bore Diameter	Groove Diameter	Groove Width	TSS Part No.	O-Ring Dimensions	X-Ring Dimensions
D_N H9	d_1 h9	L_1 +0.2			
110.0	94.5	6.3	PQ1401100	91.44 x 5.33	101.32 x 1.78
110.0	89.0	8.1	PQ2201100	88 x 7.0	101.27 x 2.62
115.0	99.5	6.3	PQ1401150	97.79 x 5.33	107.67 x 1.78
115.0	94.0	8.1	PQ2201150	93 x 7.0	107.62 x 2.62
120.0	104.5	6.3	PQ1401200	100.97 x 5.33	114.02 x 1.78
120.0	99.0	8.1	PQ2201200	98 x 7.0	107.62 x 2.62
125.0	**109.5**	**6.3**	**PQ1401250**	**107.32 x 5.33**	**114.02 x 1.78**
125.0	**104.0**	**8.1**	**PQ2201250**	**103 x 7.0**	**113.97 x 2.62**
130.0	114.5	6.3	PQ1401300	113.67 x 5.33	120.37 x 1.78
130.0	109.0	8.1	PQ2201300	108 x 7.0	120.32 x 2.62
135.0	114.0	8.1	PQ2401350	113.67 x 7.0	126.67 x 2.62
140.0	119.0	8.1	PQ2401400	116.84 x 7.0	126.67 x 2.62
150.0	129.0	8.1	PQ2401500	126.37 x 7.0	139.37 x 2.62
160.0	**139.0**	**8.1**	**PQ2401600**	**135.89 x 7.0**	**145.72 x 2.62**
170.0	149.0	8.1	PQ2401700	145.42 x 7.0	158.42 x 2.62
180.0	159.0	8.1	PQ2401800	158.12 x 7.0	171.11 x 2.62
190.0	169.0	8.1	PQ2401900	164.47 x 7.0	177.47 x 2.62
200.0	**179.0**	**8.1**	**PQ2402000**	**177.17 x 7.0**	**190.17 x 2.62**
210.0	189.0	8.1	PQ2402100	183.52 x 7.0	196.52 x 2.62
220.0	199.0	8.1	PQ2402200	196.22 x 7.0	202.87 x 2.62
230.0	209.0	8.1	PQ2402300	208.92 x 7.0	215.57 x 2.62
240.0	219.0	8.1	PQ2402400	215.27 x 7.0	221.92 x 2.62
250.0	229.0	8.1	PQ2402500	227.97 x 7.0	234.62 x 2.62
250.0	**225.5**	**8.1**	**PQ2202500**	**227.97 x 7.0**	**234.62 x 2.62**
280.0	252.0	9.5	PQ3202800	250 x 8.4	266.29 x 3.53
300.0	272.0	9.5	PQ3203000	270 x 8.4	278.99 x 3.53
310.0	282.0	9.5	PQ3203100	280 x 8.4	291.69 x 3.53
320.0	292.0	9.5	PQ3203200	290 x 8.4	304.39 x 3.53
350.0	322.0	9.5	PQ3203500	320 x 8.4	329.79 x 3.53
400.0	372.0	9.5	PQ3204000	370 x 8.4	380.59 x 3.53
420.0	392.0	9.5	PQ3204200	390 x 8.4	380.59 x 3.53
450.0	422.0	9.5	PQ3204500	420 x 8.4	430.66 x 3.53
480.0	445.0	11.5	PQ5204800	444 x 10.0	456.06 x 5.33
500.0	465.0	11.5	PQ5205000	464 x 10.0	456.06 x 5.33
600.0	565.0	11.5	PQ5206000	564 x 10.0	557.58 x 5.33
700.0	665.0	11.5	PQ5207000	664 x 10.0	658.88 x 5.33

The dimensions in **bold** type are suitable for grooves to ISO 7425/1. Bore diameter in accordance with ISO 3320.
All intermediate sizes up to 700 mm diameter can be supplied. Sizes > 700 mm diameter with special elastomers on request.

POLYPAC® - PHD Seal

Double Acting

Heavy Duty High Pressure

Material:
PTFE, NBR Elastomer, POM

■ PHD Seal

Description

The PHD Seal is a high-pressure heavy-duty piston seal with excellent leakage control and superior extrusion and wear resistance.

The PHD seal is a combination of a PTFE based slipper seal energised by an elastomer profile ring and completed with two Back-up rings (POM). It is manufactured with a predefined interference fit, which together with the squeeze of the elastomer part ensures a good sealing effect even at low system pressure. At higher pressures the elastomer part is energised by the system pressure and consequently activates the slipper seal in the radial direction.

The Back-up rings prevent the slipper seal from extrusion and ensure a long service life even under harsh conditions.

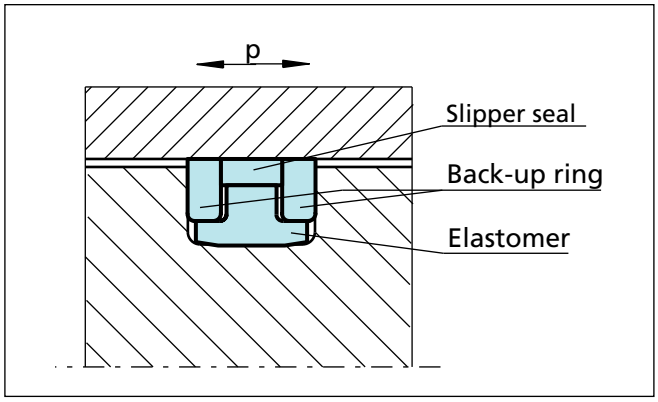

Figure 25 PHD Seal

Advantages

- Simple groove design
- No stick-slip effect when starting for smooth operation
- Minimum static and dynamic coefficient of friction
- Increased clearance possible
- Due to larger extrusion gap, safe use even with soiled media
- Long service life

Application Examples

The PHD Seal is the recommended sealing element for double acting pistons of hydraulic cylinders working in very harsh conditions such as:

- Excavators
- Heavy duty hydraulic cylinders

Technical Data

Operating conditions

Pressure:	Up to 40 MPa Peak pressure up to 60 MPa
Speed:	Up to 1.5 m/s
Temperature:	-45 °C to +135 °C
Media:	Mineral oil based hydraulic fluids, water/oil and glycol/oil emulsions
Clearance:	The maximum permissible radial clearance S_{max} is shown in Table XXV, as a function of the operating pressure and functional diameter.

Important Note:
The above data are maximum values and cannot be used at the same time. e.g. the maximum operating speed depends on material type, pressure, temperature and gap value.
Temperature range also dependent on medium.

Materials

Standard Application:

For hydraulic components:

- In mineral oils or medium with good lubricating performance
- in water /oil and water/glycol emulsions

Slipper Seal:	Bronze filled PTFE
Energiser:	NBR 80 Shore A
Back-up rings:	POM
Material code for the set:	PTNO4

Special Application:

- For special applications requiring other material combinations, please contact your local Trelleborg Sealing Solutions Company.

Table XXIV Standard PTFE Based Materials for PHD Piston Seal

Material, Applications, Properties	Code	Energiser Material	Code	Energiser Operating Temp.* °C	Mating Surface Material	MPa max.
Material TR55 **Standard material** for hydraulics, good compressive strength, good sliding and wear properties, good extrusion resistance. Bronze filled Colour: Bronze to dark green	PT_04	NBR - 70 Shore A	N	-30 to +100	Steel tubes Steel, hardened Cast iron	40
		NBR - Low temp. 70 Shore A	T	-45 to +80		
		FKM - 70 Shore A	V	-10 to +135#		
Material TR12 For all lubricating fluids, hard mating surfaces, **good sliding properties, low friction** Colour pigment filled Colour: Dark green	PT_0A	NBR - 70 Shore A	N	-30 to +100	Steel tubes Steel, hardened	40
		NBR - Low temp. 70 Shore A	T	-45 to +80		
		FKM - 70 Shore A	V	-10 to +135#		
Material TR25 For all lubricating and non-lubricating hydraulic fluids, good chemical resistance, **good dielectric properties.** Glass fibre filled+graphite+MoS2 Colour: Grey to blue	PT_0J	NBR - 70 Shore A	N	-30 to +100	Steel tubes Steel, hardened Cast iron	40
		NBR - Low temp. 70 Shore A	T	-45 to +80		
		FKM - 70 Shore A	V	-10 to +135#		
Material TR30 **For water hydraulic, oil hydraulic and pneumatic for all lubricating and non-lubricating fluids,** high extrusion resistance, good chemical resistance. Carbon, graphite filled Colour: Black	PT_0C	NBR - 70 Shore A	N	-30 to +100	Steel Stainless steel	40
		NBR - Low temp. 70 Shore A	T	-45 to +80		
		FKM - 70 Shore A	V	-10 to +135		
		EPDM - 70 Shore A	E**	-45 to +135#		

Limited high temperature due to POM Back-up Ring. * The Energiser Operation Temperature is only valid in mineral hydraulic oil.
** Material not suitable for mineral oils. Highlighted material is standard.

Material Code definition:
PHD seal with slipper seal material TR55 and NBR energiser:
PTN04

■ Installation Recommendation

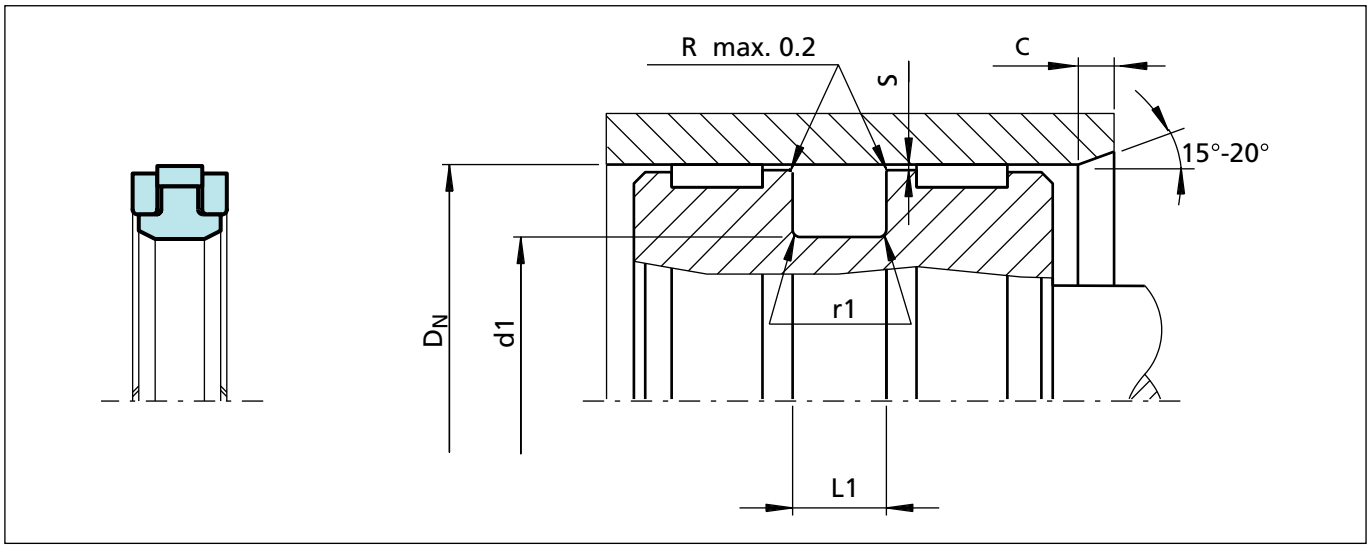

Figure 26 Installation drawing

Ordering Example

PHD Seal, complete.

Bore diameter:	D_N = 80.0 mm
TSS Part No.:	PKP000800 (from Table XXV)
Seal:	PTFE TR55
Energiser:	NBR
Back-up ring:	POM
Material set-code:	PTN04
Polypac Ref. No.:	PHD 8065

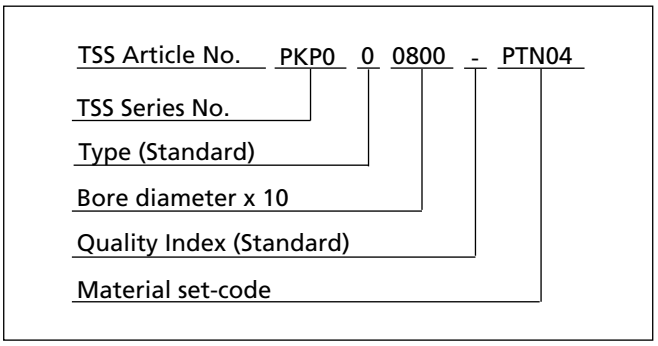

Table XXV Installation dimensions / TSS Part No.

Bore Dia.	Groove Dia.	Groove Width	Inlet Chamfer	Radius	TSS Part No.	Polypac Ref. No.
D_N H9	**d1** h9	L_1 +0.2	**C**	r_1		
50.0	36.0	9.0	5.0	0.3	PKP000500	PHD 5036
55.0	41.0	9.0	5.0	0.3	PKP000550	PHD 5541
60.0	46.0	9.0	5.0	0.3	PKP000600	PHD 6046
63.0	48.0	11.0	5.0	0.5	PKP000630	PHD 6348
65.0	50.0	11.0	5.0	0.5	PKP000650	PHD 6550
70.0	55.0	11.0	5.0	0.5	PKP000700	PHD 7055
75.0	60.0	11.0	5.0	0.5	PKP000750	PHD 7560
80.0	65.0	11.0	5.0	0.5	PKP000800	PHD 8065
85.0	70.0	11.0	5.0	0.5	PKP000850	PHD 8570

Radial Clearance (S): For pressure up to 35 MPa 0.50 For pressure from 35 MPa up to 60 MPa 0.30

POLYPAC® PHD Seal

Bore Dia.	Groove Dia.	Groove Width	Inlet Chamfer	Radius	TSS Part No.	Polypac Ref. No.
D_N H9	**d1** h9	L_1 +0.2	**C**	r_1		
90.0	75.0	11.0	5.0	0.5	PKP000900	PHD 9075
95.0	80.0	12.5	5.0	0.5	PKP000950	PHD 9580
100.0	85.0	12.5	5.0	0.5	PKP001000	PHD 10085
105.0	90.0	12.5	5.0	0.5	PKP001050	PHD 10590
110.0	95.0	12.5	5.0	0.5	PKP001100	PHD 11095
115.0	100.0	12.5	5.0	0.5	PKP001150	PHD 115100
120.0	105.0	12.5	5.0	0.5	PKP001200	PHD 120105
125.0	102.0	16.0	6.5	0.6	PKP001250	PHD 125102
130.0	107.0	16.0	6.5	0.6	PKP001300	PHD 130107
135.0	112.0	16.0	6.5	0.6	PKP001350	PHD 135112
140.0	117.0	16.0	6.5	0.6	PKP001400	PHD 140117
145.0	122.0	16.0	6.5	0.6	PKP001450	PHD 145122
150.0	127.0	16.0	6.5	0.6	PKP001500	PHD 150127
155.0	132.0	16.0	6.5	0.6	PKP001550	PHD 155132
160.0	137.0	16.0	6.5	0.6	PKP001600	PHD 160137
165.0	142.0	16.0	6.5	0.6	PKP001650	PHD 165142
170.0	147.0	16.0	6.5	0.6	PKP001700	PHD 170147
180.0	157.0	16.0	6.5	0.6	PKP001800	PHD 180157

Radial Clearance (S): For pressure up to 35 MPa 0.50 For pressure from 35 MPa up to 60 MPa 0.30

Turcon® Stepseal® 2K

Single Acting

Rubber Energized Plastic Faced Seal

Material:
Turcon®, Zurcon® and Elastomer

■ Turcon® Stepseal® 2K*

Description

The Stepseal® 2K is a single-acting seal element consisting of a seal ring of high-grade Turcon® or Zurcon® materials and an O-Ring as energizing element.

The Stepseal® 2K was originally developed and patented by Trelleborg Sealing Solutions as a rod seal. Due to its outstanding properties, however, it is equally well suited as a single-acting piston seal where high demands are made on positional accuracy and free movement.

* Patented and patent pending geometry

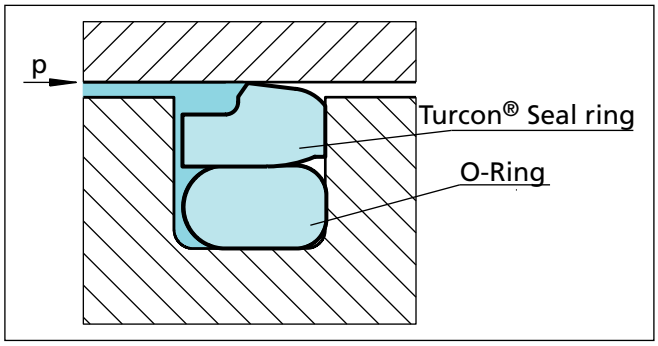

Figure 27 Turcon® Stepseal® 2K

Advantages

- High static and dynamic sealing effect
- Stick-slip free operation for precise control
- High abrasion resistance and high resistance to extrusion
- Long service life
- Simple groove design, one-piece piston possible
- Wide range of application temperatures and high resistance to chemicals, depending on the choice of O-Ring material
- Simple installation without seal edge deformation
- Available for all diameters up to 2.700 mm
- Low friction

Application Examples

The Turcon® Stepseal® 2K is the recommended sealing element for single acting pistons in hydraulic components for:

- Injection moulding machines
- Machine tools
- Presses
- Mobile cranes

Technical Data

Operating conditions:

Pressure:	Up to 60 MPa
Speed:	Up to 15 m/s, with reciprocating movements, frequency up to 5 Hz
Temperature:	-45 °C to +200 °C **)
Media:	Mineral oil-based hydraulic fluids, flame retardant hydraulic fluids, environmentally safe hydraulic fluids (bio-oils), phosphate ester, water, air and others,depending on the seal and O-Ring material compatibility (see Table XXVII)
Clearance:	The maximum permissible radial clearance S_{max} is shown in Table XXVIII, as a function of the operating pressure and functional diameter.

Important Note:
The above data are maximum values and cannot be used at the same time. e.g. the maximum operating speed depends on material type, pressure, temperature and gap value.
Temperature range also dependent on medium.

*) In the case of unpressurized applications in temperatures below 0°C please contact our application engineers for assistance!

Materials

The following material combinations have proven effective for hydraulic applications:

All round material for hydraulic applications with reciprocating, short stroke or helical movements in mineral oils, flame retardant hydraulic fluids HFC, phosphate ester, bio-oils or fluids having less satisfactory lubricating properties:

Turcon® Stepseal® 2K:	Turcon® M12	
O-Ring:	NBR, 70 Shore A	N
	FKM, 70 Shore A	V
Set code:	M12N or M12V	

For medium to heavy applications with reciprocating movements in mineral oils and other media with good lubrication:

Turcon® Stepseal® 2K:	Turcon® T46	
O-Ring:	NBR, 70 Shore A	N
	FKM, 70 Shore A	V
Set code:	T46N or T46V	

For specific applications, all Turcon® materials are available.

Other viable material combinations are listed in Table XXVII.

Series

Different cross-section sizes are recommended as a function of the seal diameters.

Table XXVIII shows the relationship between the series number according to the seal diameter range and the different application class sizes. These application classes are:

Standard application:	General applications in which no exceptional operating conditions exist.
Light application:	Applications with demands for reduced friction or for smaller grooves.
Heavy-duty application:	For exceptional operating loads such as high pressures, pressure peaks, etc.

Table XXVI Available range

Series No.	Bore Diameter D_N H9
PSK00	6.0 - 140.0
PSK10	10.0 - 140.0
PSK20	18.0 - 320.0
PSK30	40.0 - 400.0
PSK40	50.0 - 700.0
PSK80	133.0 - 999.9
PSK50	256.0 - 999.9
PSK5X	1000.0 - 1200.0
PSK60	750.0 - 999.9
PSK6X	1000.0 - 2700.0

For the recommended range see Table XXVIII.

Groove

Stepseal® 2K is also available on request for the groove sizes to ISO 7425/1.

Table XXVII Turcon® and Zurcon® Materials for Stepseal® 2K

Material, Applications, Properties	Code	O-Ring Material Shore A	Code	O-Ring Operating Temp.* °C	Mating Surface Material	MPa max. Dynamic
Turcon® M12 **First material choice** for seals in linear motion Overall improved properties For new constructions and updating For all commonly applied hydraulic fluids including fluids with low lubrication performance Lowest friction and best sliding properties Lowest wear on seals Improved absorption of abrasive contaminants No wear or abrasion of counter surface Mineral fibre and Additives filled Colour: Dark grey	M12	NBR - 70	N	-30 to +100	Steel Steel hardened Steel chrome plated (rod) Steel plated (rod) Cast iron Stainless steel Titanium	50
		NBR - 70 Low temp.	T	-45 to +80		
		FKM - 70	V	-10 to +200		
Turcon® T05 For lubricating fluids Also for gas service Very low friction Very good sliding and sealing properties Colour: Turquoise	T05	NBR - 70	N	-30 to +100	Steel hardened Steel chrome plated (rod)	20
		NBR - 70 Low temp.	T	-45 to +80		
		FKM - 70	V	-10 to +200		
Turcon® T08 For lubricating fluids and linear motion **Very high compressive strength and extrusion resistance** Hard counter surfaces is recommended Bronze filled Colour: Light to dark brown, which may have variations in shading	T08	NBR - 70	N	-30 to +100	Steel hardened Steel chrome plated (rod) Cast iron	60
		NBR - 70 Low temp.	T	-45 to +80		
		FKM - 70	V	-10 to +200		
Turcon® T10 For hydraulic and pneumatic For lubricating and non-lubricating fluids High extrusion resistance Good chemical resistance Not for electrically conducting fluids BAM tested Carbon, graphite filled Colour: Black	T10	NBR - 70	N	-30 to +100	Steel Steel hardened Steel chrome plated (rod) Stainless steel	40
		NBR - 70 Low temp.	T	-45 to +80		
		FKM - 70	V	-10 to +200		
		EPDM - 70	E**	-45 to +145		
Turcon® T29 For lubricating and non-lubricating fluids Good extrusion resistance Surface texture is not suitable for gas sealing Not for electrically conducting fluids Carbon fibre filled Colour: Grey	T29	NBR - 70	N	-30 to +100	Steel Steel hardened Steel chrome plated (rod) Cast iron Stainless steel	30
		NBR - 70 Low temp.	T	-45 to +80		
		FKM - 70	V	-10 to +200		
		EPDM - 70	E**	-45 to +145		
Turcon® T40 For lubricating and non-lubricating fluids High frequency and short strokes **Water hydraulics** Surface texture is not suitable for gas sealing Carbon fibre filled Colour: Grey	T40	NBR - 70	N	-30 to +100	Steel hardened Steel chrome plated (rod) Cast iron Stainless steel Aluminium	25
		NBR - 70 Low temp.	T	-45 to +80		
		FKM - 70	V	-10 to +200		
		EPDM - 70	E**	-45 to +145		

Turcon® Stepseal® 2K

Material, Applications, Properties	Code	O-Ring Material Shore A	Code	O-Ring Operating Temp.* °C	Mating Surface Material	MPa max. Dynamic
Turcon® T46 For lubricated hydraulics in linear motion High compressive strength High extrusion resistance Very good sliding and wear properties BAM tested Bronze filled Colour: Light to dark brown, which may have variations in shading	T46	NBR - 70	N	-30 to +100	Steel hardened Steel chrome plated (rod) Cast iron	50
		NBR - 70 Low temp.	T	-45 to +80		
		FKM - 70	V	-10 to +200		
Zurcon® Z51*** For mineral oil based fluids **Very high abrasion and extrusion resistance** For counter surface with rougher surface finish Limited chemical resistance Max. working temperature 110 °C Cast polyurethane Colour: Yellow to light-brown	Z51	NBR - 70	N	-30 to +100	Steel Steel hardened Steel chrome plated (rod) Cast iron Stainless steel Ceramic coating	60
		NBR - 70 Low temp.	T	-45 to +80		
Zurcon® Z80 For lubricating and non-lubricating fluids Water based fluids, air and gases Dry air pneumatics High abrasion and extrusion resistance For service in abrasive conditions and media with particles Good chemical resistance Limited temperature capability (-60 to +80 °C) UHMWPE (Ultra High Molecular Weight Polyethylene) Colour: White to off-white	Z80	NBR - 70	N	-30 to (+100)	Steel Steel hardened Steel chrome plated (rod) Stainless steel Aluminium Ceramic coating	35
		NBR - 70 Low temp.	T	-45 to +80		
		EPDM - 70	E**	-45 to (+145)		

* The O-Ring Operation Temperature is only valid in mineral hydraulic oil (except EPDM). ** Material not suitable for mineral oils.
*** Max. Ø 2300 BAM: Tested by "Bundesanstalt Materialprüfung, Germany". Highlighted materials are standard.

■ Installation Recommendation

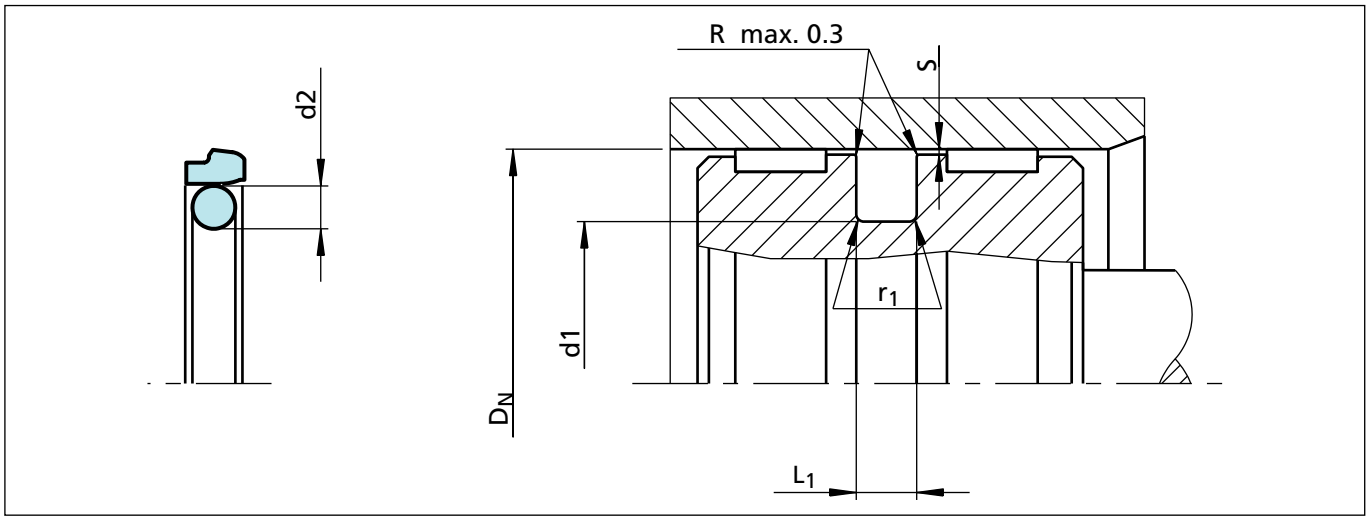

Figure 28 Installation drawing

Table XXVIII Installation Dimensions - Standard recommendations

Series No.	Bore Diameter D_N H9			Groove Diameter	Groove Width	Radius	Radial Clearance S max*			O-Ring Cross Sec.
	Standard Application	Light Application	Heavy-Duty Application	d_1 h9	L1 +0.2	r_1	10 MPa	20 MPa	40 MPa	d_2
PSK0	8 - 16.9	17 - 26.9	- -	D_N - 4.9	2.2	0.4	0.30	0.20	0.15	1.78
PSK1	17 - 26.9	27 - 59.9	- -	D_N - 7.3	3.2	0.6	0.40	0.25	0.15	2.62
PSK2	27 - 59.9	60 - 199.9	17 - 26.9	D_N - 10.7	4.2	1.0	0.50	0.30	0.20	3.53
PSK3	60 - 199.9	200 - 255.9	27 - 59.9	D_N - 15.1	6.3	1.3	0.70	0.40	0.25	5.33
PSK4	200 - 255.9	256 - 669.9	60 - 199.9	D_N - 20.5	8.1	1.8	0.80	0.60	0.35	7.00
PSK8	256 - 669.9	670 - 999.9	200 - 255.9	D_N - 24.0	8.1	1.8	0.90	0.70	0.40	7.00
PSK5	670 - 999.9	- -	256 - 669.9	D_N - 28.0	9.5	2.5	1.00	0.80	0.60	8.40
PSK5X	- -	1000 - 1200	- -	D_N - 28.0	9.5	2.5	1.00	0.80	0.60	8.40
PSK6	- -	- -	670 - 999.9	D_N - 38.0	13.8	3.0	1.20	0.90	0.60	12.00
PSK6X	1000 - 2700	- -	- -	D_N - 38.0	13.8	3.0	1.20	0.90	0.60	12.00

* At pressures **> 40 MPa** use diameter tolerance H8/f8 (bore/piston) in area of seal or consult TSS for alternative material or profiles.
TSS Slydring® / Wear Rings are not applicable at very small radical clearances. Please consult the Slydring® catalog.
O-Rings with 12 mm cross section are delivered as special profilring

Ordering example

Turcon® Stepseal® 2K, complete with O-Ring, standard application, Series PSK3 (from Table XXVIII).
Bore diameter: D_N = 80.0 mm
TSS Part No. PSK300800 (from Table XXIX)

Select the material from Table XXVII. The corresponding code numbers are appended to the TSS Part No. (from Table XXIX). Together they form the TSS Article No.
For all intermediate sizes not shown in Table XXIX, the TSS Article No. can be determined from the example opposite.

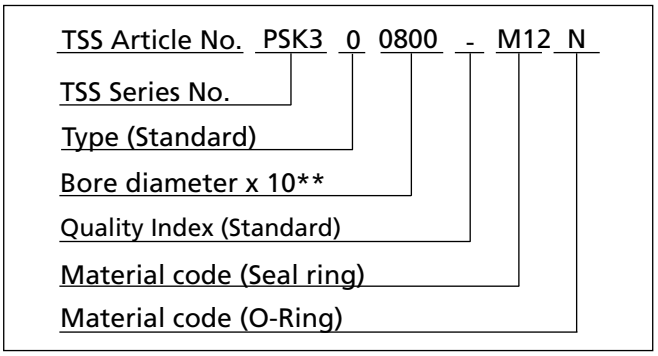

** For diameters ≥ 1000.0 mm multiply only by factor 1.
Example: PSK6 for diameter 1200.0 mm.
TSS Article No.: PSK6**X1200** - M12N.

Table XXIX Installation dimensions / TSS Part No.

Bore Dia. D_N H9	Groove Dia. d_1 h9	Groove Width L_1 +0.2	TSS Part No.	O-Ring Dimensions
9.0	4.1	2.2	PSK000090	3.68 x 1.78
10.0	5.1	2.2	PSK000100	4.80 x 1.8
12.0	**7.1**	**2.2**	**PSK000120**	**6.70 x 1.8**
14.0	9.1	2.2	PSK000140	8.75 x 1.8
15.0	10.1	2.2	PSK000150	9.25 x 1.78
16.0	**11.1**	**2.2**	**PSK000160**	**10.82 x 1.78**
18.0	10.7	3.2	PSK100180	9.19 x 2.62
20.0	**15.1**	**2.2**	**PSK000200**	**14.00 x 1.78**
20.0	**12.7**	**3.2**	**PSK100200**	**12.37 x 2.62**
22.0	14.7	3.2	PSK100220	13.94 x 2.62
25.0	**17.7**	**3.2**	**PSK100250**	**17.12 x 2.62**
25.0	**14.3**	**4.2**	**PSK200250**	**13.87 x 3.53**
28.0	17.3	4.2	PSK200280	15.47 x 3.53
30.0	22.7	3.2	PSK100300	21.89 x 2.62
30.0	19.3	4.2	PSK200300	18.66 x 3.53
32.0	**24.7**	**3.2**	**PSK100320**	**23.47 x 2.62**
32.0	**21.3**	**4.2**	**PSK200320**	**20.22 x 3.53**
35.0	24.3	4.2	PSK200350	23.40 x 3.53
40.0	**32.7**	**3.2**	**PSK100400**	**31.42 x 2.62**
40.0	**29.3**	**4.2**	**PSK200400**	**28.17 x 3.53**
42.0	31.3	4.2	PSK200420	29.75 x 3.53
45.0	34.3	4.2	PSK200450	32.92 x 3.53
48.0	37.3	4.2	PSK200480	36.09 x 3.53
50.0	**39.3**	**4.2**	**PSK200500**	**37.70 x 3.53**
50.0	**34.9**	**6.3**	**PSK300500**	**32.69 x 5.33**
52.0	41.3	4.2	PSK200520	40.87 x 3.53
55.0	44.3	4.2	PSK200550	44.04 x 3.53
60.0	44.9	6.3	PSK300600	43.82 x 5.33
63.0	**52.3**	**4.2**	**PSK200630**	**50.39 x 3.53**
63.0	**47.9**	**6.3**	**PSK300630**	**46.99 x 5.33**
65.0	49.9	6.3	PSK300650	46.99 x 5.33
70.0	59.3	4.2	PSK200700	56.74 x 3.53
70.0	54.9	6.3	PSK300700	53.34 x 5.33
75.0	59.9	6.3	PSK300750	56.52 x 5.33
80.0	**64.9**	**6.3**	**PSK300800**	**62.87 x 5.33**
80.0	**59.5**	**8.1**	**PSK400800**	**58 x 7.0**

Bore Dia. D_N H9	Groove Dia. d_1 h9	Groove Width L_1 +0.2	TSS Part No.	O-Ring Dimensions
85.0	69.9	6.3	PSK300850	69.22 x 5.33
85.0	64.5	8.1	PSK400850	63 x 7.0
90.0	74.9	6.3	PSK300900	72.39 x 5.33
90.0	69.5	8.1	PSK400900	68 x 7.0
95.0	79.9	6.3	PSK300950	78.74 x 5.33
95.0	74.5	8.1	PSK400950	73 x 7.0
100.0	**84.9**	**6.3**	**PSK301000**	**81.92 x 5.33**
100.0	**79.5**	**8.1**	**PSK401000**	**78 x 7.0**
105.0	89.9	6.3	PSK301050	88.27 x 5.33
105.0	84.5	8.1	PSK401050	83 x 7.0
106.0	90.9	6.3	PSK301060	88.27 x 5.33
110.0	94.9	6.3	PSK301100	91.44 x 5.33
110.0	89.5	8.1	PSK401100	88 x 7.0
115.0	99.9	6.3	PSK301150	97.79 x 5.33
115.0	94.5	8.1	PSK401150	93 x 7.0
120.0	104.9	6.3	PSK301200	104.14 x 5.33
120.0	99.5	8.1	PSK401200	98 x 7.0
125.0	**109.9**	**6.3**	**PSK301250**	**107.32 x 5.33**
125.0	**104.5**	**8.1**	**PSK401250**	**103 x 7.0**
130.0	114.9	6.3	PSK301300	113.67 x 5.33
130.0	109.5	8.1	PSK401300	108 x 7.0
135.0	114.5	8.1	PSK401350	113.67 x 7.0
140.0	119.5	8.1	PSK401400	116.84 x 7.0
145.0	124.5	8.1	PSK401450	123.19 x 7.0
150.0	129.5	8.1	PSK401500	126.37 x 7.0
155.0	139.9	6.3	PSK301550	135.89 x 5.33
160.0	**144.9**	**6.3**	**PSK301600**	**142.24 x 5.33**
160.0	**139.5**	**8.1**	**PSK401600**	**135.89 x 7.00**
165.0	149.9	6.3	PSK301650	148.49 x 5.33
165.0	144.5	8.1	PSK401650	142.24 x 7.0
170.0	149.5	8.1	PSK401700	145.42 x 7.0
175.0	159.9	6.3	PSK301750	158.12 x 5.33
180.0	164.9	6.3	PSK301800	164.47 x 5.33
180.0	159.5	8.1	PSK401800	158.12 x 7.0
190.0	174.9	6.3	PSK301900	170.82 x 5.33
190.0	169.5	8.1	PSK401900	164.47 x 7.0

Bore Dia.	Groove Dia.	Groove Width	TSS Part No.	O-Ring Dimensions
D_N H9	d_1 h9	L_1 +0.2		
200.0	**184.9**	**6.3**	**PSK302000**	**183.52 x 5.33**
200.0	**179.5**	**8.1**	**PSK402000**	**177.17 x 7.0**
205.0	184.5	8.1	PSK402050	183.52 x 7.0
210.0	189.5	8.1	PSK402100	183.52 x 7.0
220.0	204.9	6.3	PSK302200	202.57 x 5.33
220.0	199.5	8.1	PSK402200	196.22 x 7.0
230.0	209.5	8.1	PSK402300	208.92 x 7.0
240.0	219.5	8.1	PSK402400	215.27 x 7.0
250.0	**229.5**	**8.1**	**PSK402500**	**227.97 x 7.0**
250.0	**226.0**	**8.1**	**PSK802500**	**227.97 x 7.0**
260.0	236.0	8.1	PSK802600	227.97 x 7.0
270.0	246.0	8.1	PSK802700	240.67 x 7.0
280.0	256.0	8.1	PSK802800	253.37 x 7.0
300.0	276.0	8.1	PSK803000	266.07 x 7.0
306.0	285.5	8.1	PSK403060	278.77 x 7.0
310.0	286.0	8.1	PSK803100	278.77 x 7.0
320.0	**299.5**	**8.1**	**PSK403200**	**291.47 x 7.0**
320.0	**296.0**	**8.1**	**PSK803200**	**291.47 x 7.0**
330.0	306.0	8.1	PSK803300	304.17 x 7.0
340.0	316.0	8.1	PSK803400	316.87 x 7.0
345.0	324.5	8.1	PSK403450	316.87 x 7.0
350.0	326.0	8.1	PSK803500	316.87 x 7.0
360.0	336.0	8.1	PSK803600	329.57 x 7.0
370.0	346.0	8.1	PSK803700	342.27 x 7.0
380.0	356.0	8.1	PSK803800	354.97 x 7.0
400.0	**376.0**	**8.1**	**PSK804000**	**367.67 x 7.0**
420.0	396.0	8.1	PSK804200	393.07 x 7.0
430.0	406.0	8.1	PSK804300	405.26 x 7.0
440.0	416.0	8.1	PSK804400	405.26 x 7.0
450.0	426.0	8.1	PSK804500	417.96 x 7.0
480.0	456.0	8.1	PSK804800	456.06 x 7.0
500.0	**476.0**	**8.1**	**PSK805000**	**468.76 x 7.0**
520.0	499.5	8.1	PSK405200	494.16 x 7.0
540.0	516.0	8.1	PSK805400	506.86 x 7.0
600.0	576.0	8.1	PSK806000	557.66 x 7.0
650.0	626.0	8.1	PSK806500	608.08 x 7.0

Bore Dia.	Groove Dia.	Groove Width	TSS Part No.	O-Ring Dimensions
D_N H9	d_1 h9	L_1 +0.2		
700.0	672.7	9.5	PSK507000	670 x 8.4
800.0	772.7	9.5	PSK508000	770 x 8.4
860.0	832.7	9.5	PSK508600	830 x 8.4
900.0	872.7	9.5	PSK509000	870 x 8.4
920.0	892.7	9.5	PSK509200	890 x 8.4
1000.0	972.7	9.5	PSK5X1000	970 x 8.4
1000.0	962.0	13.8	PSK6X1000	960 x 12.0
1200.0	1172.7	9.5	PSK5X1200	1170 x 8.4
1200.0	1162.0	13.8	PSK6X1200	1160 x 12.0
1500.0	1462.0	13.8	PSK6X1500	1460 x 12.0
2000.0	1962.0	13.8	PSK6X2000	1960 x 12.0
2700.0	2662.0	13.8	PSK6X2700	2660 x 12.0

The bore diameters in **bold** type comply with the recommendations of ISO 3320.
Other dimensions and all intermediate sizes up to 2700 mm diameter including imperial (inch) sizes can be supplied.

All O-Rings with 12 mm cross section are delivered as special Profilring.

Turcon® Stepseal® V

Single Acting

Rubber Energized Plastic Faced Seal

Material:
Turcon®, Zurcon® and Elastomer

■ Turcon® Stepseal® V

Introduction

First invented and patented* by Trelleborg Sealing Solutions, a built-in check valve function promised to eliminate pressure trap between seals in tandem sealing systems. Extensive development has now brought the inherent prevention of pressure build-up together with dependable sealing performance in one element; Turcon® Stepseal® V.

Stepseal® V has the efficient seal performance and outstanding service life of the Stepseal® range, and the reliable prevention of pressure build-up brought by a refined check valve function. In dynamic applications Stepseal® V brings efficient, reliable sealing performance under even the most demanding service conditions.

Stepseal® V offers a uniform, low friction characteristic of the sealing system, throughout its whole life, by preventing undefined pressurisation of the secondary seal element.

Characteristics

- Primary seal with hydrostatic ventilation
- Check valve function
- Hydrodynamic back-pumping
- Stabilised position in the groove
- Fits existing Turcon® Stepseal® groove
- Available for ISO 7425/1 groove
- Prolonged seal life
- Increased leakage control
- Only usable with a secondary seal

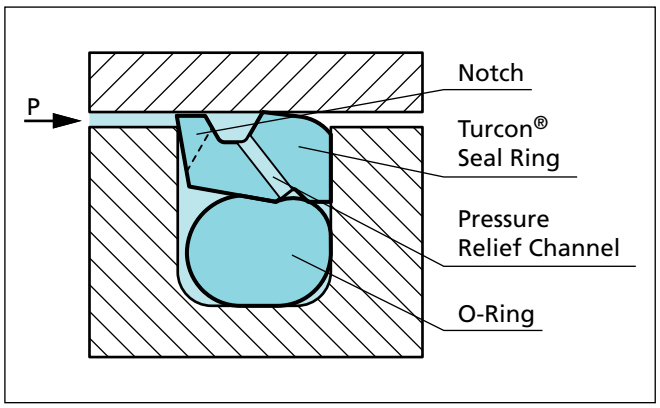

Figure 29 Turcon® Stepseal® V with tight axial groove fit

Description

Stepseal® V is a new generation primary seal designed for use in seal systems based on the dynamic, unidirectional Stepseal® sealing concept. Applied as a piston seal, Stepseal® V is preferably used with a double-acting seal from the Turcon® range of piston seals. Under extreme performance requirements Stepseal® V offers improved leakage control, extended service life and increased reliability.

The sealing performance of the patented Stepseal® V design – see Figure 29 – results from a combination of the hydrodynamic properties of the seal and the O-Ring and the hydrostatic pressure relief check valve function.

The classic Stepseal® operation ensures a controlled pressure gradient that minimizes fluid adherence to the cylinder bore during the stroke, and enables residual fluid film on the bore to be returned under the seal on the return stroke.

The O-Ring check valve function controls the operation of the pressure relief channel: When the seal is pressurised by the system pressure the O-Ring keeps the channel closed to ensure that the hydraulic fluid is not passing through the channel and further between the groove wall and the Turcon® Seal Ring.

If pressure, higher than the actual system pressure, appears between the Stepseal® V and the secondary seal, the O-Ring is opening the relief groove somewhere at the circumference and the inter-seal pressure is immediately relieved. Due to the circumferential groove with integrated relief hole the relief function is independent from side load and deflection of the seal or O-Ring.

These patented design features further improve the performance of the Stepseal® concept at all service conditions. Besides giving high static and dynamic sealing performance, the Stepseal® V secures that build-up of intermediate pressure, which can be found with tandem seal configurations, is non-existent, regardless of the pressure, speed, deflection and piston movements.

Stepseal® V is available in high-grade Turcon® or Zurcon® materials with outstanding sliding and wear resistance properties. It is installed in Trelleborg Sealing Solutions standard grooves and according to ISO 7425, using an O-Ring as energising element.

* Patented and patent pending geometry:
DE 9654357; 24. 2. 996

Advantages:

- Same basic function as Turcon® Stepseal® 2K
- No system pressure on secondary sealing element
- Check valve function of O-Ring eliminates risk of fluid bypassing the seal during pressure loading when pressurised
- Independent of any speed relation of counter surface
- Independent of stroke length
- Independent of deflection
- Minimum contribution of friction of secondary sealing element
- Minimum wear of secondary sealing element
- Increased leakage control
- Prolonged seal life
- Increased operational reliability
- Fits standard Turcon® Stepseal® 2K groove dimensions as well as ISO 7425 seal housings

Application Examples

- Piston accumulators
- Single acting hydraulic cylinders
- Piston designs with tandem sealing systems
- Mobile crane boom cylinders
- Hydro plant cylinders

Stepseal® V is particularly recommended in floating piston accumulators as primary seal on the oil side in combination with AQ-Seal®.

Technical data

Operating conditions:

Pressure:	Up to 50 MPa (Turcon® M12) Up to 60 MPa (Turcon® T08 and Zurcon® Z51)
Speed:	Up to 15 m/s with linear movements, frequency up to 15 Hz
Temperature:	-45 °C to +200 °C *) (depending on seal and O-Ring material)
Media:	Mineral oil based hydraulic fluids, flame retardant hydraulic fluids, environmentally safe hydraulic fluids (plant based oils), phosphate ester, water and others, depending on the seal and O-Ring material compatibility - see Table XXXI.
Clearance:	The maximum permissible radial clearance Smax is shown in Table XXXII, as a function of the operating pressure and functional diameter.

Important Note:
The above data are maximum values and cannot be used at the same time. e.g. the maximum operating speed depends on material type, pressure, temperature and gap value.

*) in the case of unpressurized applications in temperatures below 0° C please contact our application engineers for assistance!

Materials

The following material combinations have proven effective for hydraulic applications:

All round material for hydraulic applications with reciprocating, short stroke or helical movements in mineral oils, flame retardant hydraulic fluids HFC, phosphate ester, bio-oils or fluids having less satisfactory lubricating properties:

Turcon® Stepseal® V:	Turcon® M12	
O-Ring:	NBR, 70 Shore A	N
	FKM, 70 Shore A	V
Set code:	M12N or M12V	

For medium to heavy applications with reciprocating movements in mineral oils and other media with good lubrication:

Turcon® Stepseal® V:	Turcon® T46	
O-Ring:	NBR, 70 Shore A	N
	FKM, 70 Shore A	V
Set code:	T46N or T46V	

For specific applications, all Turcon® materials are available. Other viable material combinations are listed in Table XXXI.

Installation Instructions

Stepseal® V is preferably installed in closed grooves according to Figure 6, 7 and 8.

Series

Different cross-section sizes are recommended as a function of the seal diameters

Table XXX, shows the relationship between the series number according to the seal diameter range and the different application class sizes. These application classes are:

Standard application:	General applications in which no exceptional operating conditions exist.
Light application:	Applications with demands for reduced friction or for smaller grooves.
Heavy-duty application:	For exceptional operating loads such as high pressures, pressure peaks, etc.

Table XXX Available range

Series No.	Piston Diameter D_N H9
PSV20	15.0 - 320.0
PSV30	18.0 – 480.0
PSV40	50.0 – 700.0
PSV80	133.0 - 999.9
PSV50	256.0 - 999.9
PSV5X	1000.0 - 1200.0
PSV60	750.0 - 999.9
PSV6X	1000.0 - 2700.0

For the recommended range see Table XXXII.

Application Examples

- Piston accumulators
- Gas spring suspension
- Long stroke cylinders
- Crane boom cylinders
- Piling Barges
- Waterpower cylinders
- Watergate cylinders
- Theater hydraulics
- Safety systems

Redundant Sealing System

In many applications, secondary seal systems are demanded e.g. for safety requirement. Figure 30 shows such a tandem configuration with the Stepseal® V.

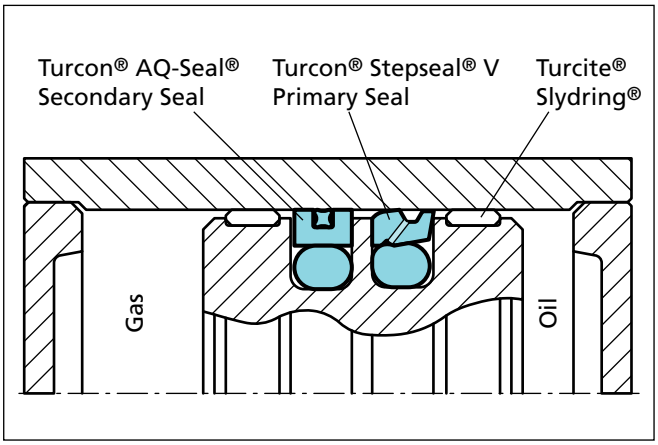

Figure 30 Tandem Turcon® Stepseal® V and Turcon® AQ-Seal® configuration in piston accumulator

When utilizing Stepseal® V, with valve function, there will be no pressure trap between the primary and secondary seals and no extra space between them is required to accumulate hydraulic fluid.

Depending on the application and the operating conditions, the combination of different materials offers a further improvement in the sealing efficiency and the service life of the system.

Table XXXI Turcon® and Zurcon® Materials for Stepseal® V

Material, Applications, Properties	Code	O–Ring Material Shore A	Code	O-Ring Operating Temp.* °C	Mating Surface Material	MPa max. Dynamic
Turcon® M12 **First material choice** for seals in linear motion Overall improved properties For new constructions and updating For all commonly applied hydraulic fluids including fluids with low lubrication performance Lowest friction and best sliding properties Lowest wear on seals Improved absorption of abrasive contaminants No wear or abrasion of counter surfaceMineral fibre and Additives filled Colour: Dark grey	M12	NBR - 70	N	-30 to +100	Steel Steel hardened Steel chrome plated (rod) Steel plated (rod) Cast iron Stainless steel Titanium	50
		NBR - 70 Low temp.	T	-45 to +80		
		FKM - 70	V	-10 to +200		
Turcon® T05 For lubricating fluids Also for gas service Very low friction Very good sliding and sealing properties Colour: Turquoise	T05	NBR - 70	N	-30 to +100	Steel hardened Steel chrome plated (rod)	20
		NBR - 70 Low temp.	T	-45 to +80		
		FKM - 70	V	-10 to +200		
Turcon® T08 For lubricating fluids and linear motion **Very high compressive strength and extrusion resistance** Hard counter surfaces is recommended Bronze filled Colour: Light to dark brown, which may have variations in shading	T08	NBR - 70	N	-30 to +100	Steel hardened Steel chrome plated (rod) Cast iron	60
		NBR - 70 Low temp.	T	-45 to +80		
		FKM - 70	V	-10 to +200		
Turcon® T10 For hydraulic and pneumatic For linear motion in lubricating and non-lubricating fluids High extrusion resistance Good chemical resistance Not for electrically conducting fluids BAM tested Carbon, graphite filled Colour: Black	T10	NBR - 70	N	-30 to +100	Steel Steel hardened Steel chrome plated (rod) Stainless steel	40
		NBR - 70 Low temp.	T	-45 to +80		
		FKM - 70	V	-10 to +200		
		EPDM - 70	E**	-45 to +145		
Turcon® T29 For lubricating and non-lubricating fluids Good extrusion resistance Surface texture is not suitable for gas sealing Not for electrically conducting fluids Carbon fibre filled Colour: Grey	T29	NBR - 70	N	-30 to +100	Steel Steel hardened Steel chrome plated (rod) Cast iron Stainless steel	30
		NBR -70 Low temp.	T	-45 to +80		
		FKM - 70	V	-10 to +200		
		EPDM - 70	E**	-45 to +145		
Turcon® T40 For lubricating and non-lubricating fluids High frequency and short strokes **Water hydraulics** Surface texture is not suitable for gas sealing Carbon fibre filled Colour: Grey	T40	NBR - 70	N	-30 to +100	Steel Steel hardened Steel chrome plated (rod) Cast iron Stainless steel Aluminium	25
		NBR - 70 Low temp.	T	-45 to +80		
		FKM - 70	V	-10 to +200		
		EPDM - 70	E**	-45 to +145		

* The O-Ring Operation Temperature is only valid in mineral hydraulic oil (except EPDM). ** Material not suitable for mineral oils.
BAM: Tested by "Bundesanstalt Materialprüfung, Germany". Highlighted materials are standard.

Material, Applications, Properties	Code	O–Ring Material Shore A	Code	O-Ring Operating Temp.* °C	Mating Surface Material	MPa max. Dyna-mic
Turcon® T46 For lubricated hydraulics in linear motion High compressive strength High extrusion resistance Very good sliding and wear properties BAM tested Bronze filled Colour: Light to dark brown, which may have variations in shading	T46	NBR - 70	N	-30 to +100	Steel hardened Steel chrome plated (rod) Cast iron	50
		NBR - 70 Low temp.	T	-45 to +80		
		FKM - 70	V	-10 to +200		
Zurcon® Z51*** For mineral oil based fluids **Very high abrasion and extrusion resistance** For counter surface with rougher surface finish Limited chemical resistance Max. working temperature 110 °C Cast polyurethane Colour: Yellow to light-brown	Z51	NBR - 70	N	-30 to +100	Steel Steel hardened Steel chrome plated (rod) Cast iron Stainless steel Ceramic coating	60
		NBR - 70 Low temp.	T	-45 to +80		
Zurcon® Z80 For lubricating and non-lubricating fluids Water based fluids, air and gases Dry air pneumatics High abrasion and extrusion resistance For service in abrasive conditions and media with particles Good chemical resistance Limited temperature capability (-60 to +80 °C) UHMWPE (Ultra High Molecular Weight Polyethylene) Colour: White to off-white	Z80	NBR- 70	N	-30 to (+100)	Steel Steel hardened Steel chrome plated (rod) Stainless steel Aluminium Ceramic coating	35
		NBR -70 Low temp.	T	-45 to +80		
		EPDM - 70	E**	-45 to(+145)		

* The O-Ring Operation Temperature is only valid in mineral hydraulic oil (except EPDM). ** Material not suitable for mineral oils.
BAM: Tested by "Bundesanstalt Materialprüfung, Germany". Highlighted materials are standard.

■ Installation Recommendation

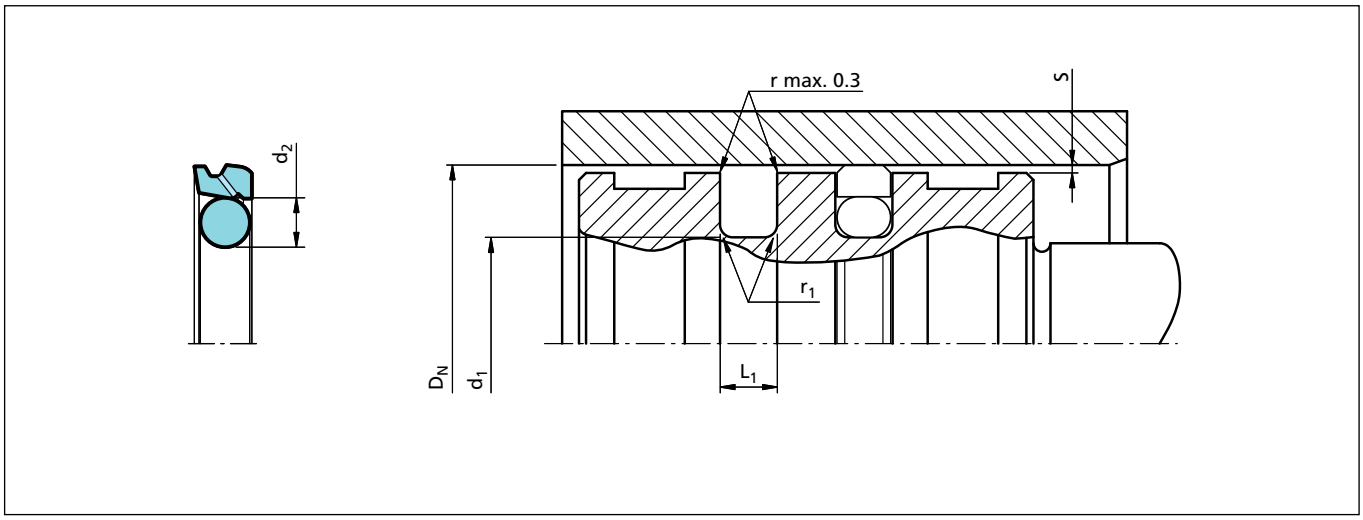

Figure 31 Installation drawing

Table XXXII Installation dimensions – Standard recommendations

Series No.	Rod Diameter D_N H9			Groove Diameter	Groove Width	Radius	Radial Clearance S_{max*}			O-Ring Cross-Section
	Standard Application	Light Application	Heavy Duty Application	D1 h9	L1 +0.2	r1	10 MPa	20 MPa	40 MPa	d2
PSV2	25.0 - 59.9	60.0 - 199.9	17.0 - 24.9	DN - 10.7	4.2	1.0	0.50	0.30	0.20	3.53
PSV3	60.0 - 199.9	200.0 - 255.9	25.0 - 59.9	DN - 15.1	6.3	1.3	0.70	0.40	0.25	5.33
PSV4	200.0 - 255.9	256.0 - 669.9	60.0 - 199.9	DN - 20.5	8.1	1.8	0.80	0.60	0.35	7.00
PSV8	256.0 - 669.9	670.0 - 999.9	200.0 - 255.9	DN - 24.0	8.1	1.8	0.90	0.70	0.40	7.00
PSV5	670.0 - 999.9	-	256.0 - 669.9	DN - 27.3	9.5	2.5	1.00	0.80	0.60	8.40
PSV5X	-	1000.0 - 1200.0	-	DN - 27.3	9.5	2.5	1.00	0.80	0.60	8.40
PSV6**	-	-	670.0 - 999.9	DN - 38.0	13.8	3.0	1.20	0.90	0.60	12.00
PSV6X**	1000.0 - 2700.0	-	-	DN - 38.0	13.8	3.0	1.20	0.90	0.60	12.00

* At pressures > 40 MPa use diameter tolerance H8/f8 (bore/piston) in area of seal or consult TSS for alternative material or profiles.

** All O-Rings with 12 mm cross section are delivered as special Profile ring.

Ordering example

Turcon® Stepseal® V complete with O-Ring, standard application;

Series: PSV3 (from Table Table XXXII).
Bore diameter: D_N = 80.0 mm
TSS Part No.: PSV300800 (from Table XXXIII).

Select the material from Table XXXI.
The corresponding code numbers are appended to the TSS Part No. Together these form the TSS Article Number.

The TSS Article Number for all intermediate sizes not shown in Table XXXIII can be determined following the example.

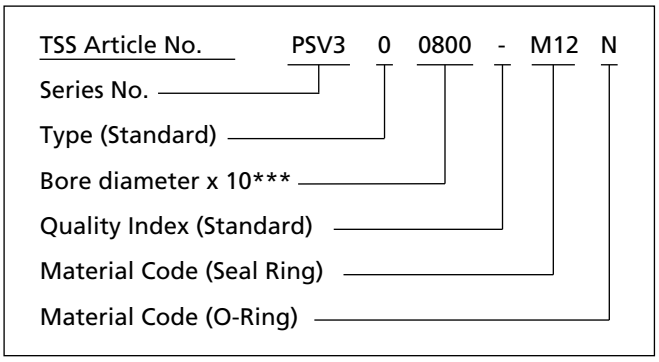

*** For diameters ≥ 1000.0 mm multiply only by factor 1.
Example: PSVK6 for diameter 1200.0 mm.
TSS Article no.: PSV6X1200 - M12N.

Table XXXIII Installation dimensions / TSS Part No.

Bore Dia. D_N f8/h9	Groove Dia. d1 H9	Groove Width L1 +0.2	TSS Part No.	O-Ring Dimensions
15.0	4.3	4.2	PSV200150	3.47 x 3.53
20.0	**9.3**	**4.2**	**PSV200200**	**8.47 x 3.53**
25.0	**14.3**	**4.2**	**PSV200250**	**13.87 x 3.53**
28.0	17.3	4.2	PSV200280	15.47 x 3.53
30.0	19.3	4.2	PSV200300	18.66 x 3.53
32.0	**21.3**	**4.2**	**PSV200320**	**20.22 x 3.53**
35.0	24.3	4.2	PSV200350	23.40 x 3.53
40.0	**29.3**	**4.2**	**PSV200400**	**28.17 x 3.53**
42.0	31.3	4.2	PSV200420	29.75 x 3.53
45.0	34.3	4.2	PSV200450	32.92 x 3.53
48.0	37.3	4.2	PSV200480	36.09 x 3.53
50.0	**39.3**	**4.2**	**PSV200500**	**37.69 x 3.53**
50.0	**34.9**	**6.3**	**PSV300500**	**32.69 x 5.33**
52.0	41.3	4.2	PSV200520	40.87 x 3.53
55.0	44.3	4.2	PSV200550	44.04 x 3.53
60.0	44.9	6.3	PSV300600	43.82 x 5.33
63.0	**52.3**	**4.2**	**PSV200630**	**50.39 x 3.53**
63.0	**47.9**	**6.3**	**PSV300630**	**46.99 x 5.33**
65.0	49.9	6.3	PSV300650	46.99 x 5.33
70.0	59.3	4.2	PSV200700	56.74 x 3.53
70.0	54.9	6.3	PSV300700	53.34 x 5.33
70.0	49.5	8.1	PSV400700	48.00 x 7.00
75.0	59.9	6.3	PSV300750	56.52 x 5.33
80.0	**64.9**	**6.3**	**PSV300800**	**62.87 x 5.33**
80.0	**59.5**	**8.1**	**PSV400800**	**58.00 x 7.00**
85.0	69.9	6.3	PSV300850	69.22 x 5.33
85.0	64.5	8.1	PSV400850	63.00 x 7.00
90.0	74.9	6.3	PSV300900	72.39 x 5.33
90.0	69.5	8.1	PSV400900	68.00 x 7.00
95.0	79.9	6.3	PSV300950	78.74 x 5.33
95.0	74.5	8.1	PSV400950	73.00 x 7.00
100.0	**84.9**	**6.3**	**PSV301000**	**81.92 x 5.33**
100.0	**79.5**	**8.1**	**PSV401000**	**78 .00x 7.00**
105.0	89.9	6.3	PSV301050	88.27 x 5.33
105.0	84.5	8.1	PSV401050	83.00 x 7.00
106.0	90.9	6.3	PSV301060	88.27 x 5.33

Bore Dia. D_N f8/h9	Groove Dia. d1 H9	Groove Width L1 +0.2	TSS Part No.	O-Ring Dimensions
110.0	94.9	6.3	PSV301100	91.44 x 5.33
110.0	89.5	8.1	PSV401100	88.00 x 7.00
115.0	99.9	6.3	PSV301150	97.79 x 5.33
115.0	94.5	8.1	PSV401150	93.00 x 7.00
120.0	104.9	6.3	PSV301200	104.14 x 5.33
120.0	99.5	8.1	PSV401200	98.00 x 7.00
125.0	**109.9**	**6.3**	**PSV301250**	**107.32 x 5.33**
125.0	**104.5**	**8.1**	**PSV401250**	**103.00 x 7.00**
130.0	114.9	6.3	PSV301300	113.67 x 5.33
130.0	109.5	8.1	PSV401300	108.00 x 7.00
135.0	114.5	8.1	PSV401350	113.67 x 7.00
140.0	119.5	8.1	PSV401400	116.84 x 7.00
145.0	124.5	8.1	PSV401450	123.19 x 7.00
150.0	129.5	8.1	PSV401500	126.37 x 7.00
155.0	139.9	6.3	PSV301550	135.89 x 5.33
160.0	**144.9**	**6.3**	**PSV301600**	**142.24 x 5.33**
160.0	**139.5**	**8.1**	**PSV401600**	**135.89 x 7.00**
165.0	149.9	6.3	PSV301650	148.49 x 5.33
165.0	144.5	8.1	PSV401650	142.24 x 7.00
170.0	149.5	8.1	PSV401700	145.42 x 7.00
175.0	159.9	6.3	PSV301750	158.12 x 5.33
180.0	164.9	6.3	PSV301800	164.47 x 5.33
180.0	159.5	8.1	PSV401800	158.12 x 7.00
190.0	174.9	6.3	PSV301900	170.82 x 5.33
190.0	169.5	8.1	PSV401900	164.47 x 7.00
200.0	**184.9**	**6.3**	**PSV302000**	**183.52 x 5.33**
200.0	**179.5**	**8.1**	**PSV402000**	**177.17 x 7.00**
205.0	184.5	8.1	PSV402050	183.52 x 7.00
210.0	189.5	8.1	PSV402100	183.52 x 7.00
220.0	204.9	6.3	PSV302200	202.57 x 5.33
220.0	199.5	8.1	PSV402200	196.22 x 7.00
230.0	209.5	8.1	PSV402300	208.90 x 7.00
240.0	219.5	8.1	PSV402400	215.27 x 7.00
250.0	**229.5**	**8.1**	**PSV402500**	**227.97 x 7.00**
250.0	**226.0**	**8.1**	**PSV802500**	**227.97 x 7.00**
260.0	236.0	8.1	PSV802600	227.97 x 7.00

Bore Dia. D_N f8/h9	Groove Dia. d1 H9	Groove Width L1 +0.2	TSS Part No.	O-Ring Dimensions
270.0	246.0	8.1	PSV802700	240.67 x 7.00
280.0	256.0	8.1	PSV802800	253.37 x 7.00
300.0	276.0	8.1	PSV803000	266.07 x 7.00
306.0	285.5	8.1	PSV403060	278.77 x 7.00
310.0	286.0	8.1	PSV803100	278.77 x 7.00
320.0	**299.5**	**8.1**	**PSV403200**	**291.47 x 7.00**
320.0	**296.0**	**8.1**	**PSV803200**	**291.47 x 7.00**
330.0	306.0	8.1	PSV803300	304.17 x 7.00
340.0	316.0	8.1	PSV803400	316.87 x 7.00
345.0	324.5	8.1	PSV403450	316.87 x 7.00
350.0	326.0	8.1	PSV803500	316.87 x 7.00
360.0	336.0	8.1	PSV803600	329.57 x 7.00
370.0	346.0	8.1	PSV803700	342.27 x 7.00
380.0	356.0	8.1	PSV803800	354.97 x 7.00
400.0	**376.0**	**8.1**	**PSV804000**	**367.67 x 7.00**
420.0	396.0	8.1	PSV804200	393.07 x 7.00
430.0	406.0	8.1	PSV804300	405.26 x 7.00
440.0	416.0	8.1	PSV804400	405.26 x 7.00
450.0	426.0	8.1	PSV804500	417.96 x 7.00
480.0	456.0	8.1	PSV804800	456.06 x 7.00
500.0	**476.0**	**8.1**	**PSV805000**	**468.76 x 7.00**
520.0	499.5	8.1	PSV405200	494.16 x 7.00
540.0	516.0	8.1	PSV805400	506.86 x 7.00
600.0	576.0	8.1	PSV806000	557.66 x 7.00
650.0	626.0	8.1	PSV806500	608.08 x 7.00
700.0	672.7	9.5	PSV507000	670 x 8.40
780.0	752.7	9.5	PSV507800	750 x 8.40
800.0	772.7	9.5	PSV508000	770 x 8.40
820.0	792.7	9.5	PSV508200	790 x 8.40
860.0	832.7	9.5	PSV508600	830 x 8.40
900.0	872.7	9.5	PSV509000	870 x 8.40
920.0	892.7	9.5	PSV509200	890 x 8.40
1000.0	972.7	9.5	PSV5X1000	970 x 8.40
1000.0	962.0	13.8	PSV6X1000	960 x 12.00
1200.0	1172.7	9.5	PSV5X1200	1170 x 8.40
1200.0	1162.0	13.8	PSV6X1200	1160 x 12.00

Bore Dia. D_N f8/h9	Groove Dia. d1 H9	Groove Width L1 +0.2	TSS Part No.	O-Ring Dimensions
1500.0	1462.0	13.8	PSV6X1500	1460 x 12.00
2000.0	1962.0	13.8	PSV6X2000	1960 x 12.00
2650.0	2612.0	13.8	PSV6X2650	2610 x 12.00

The bore diameters in bold type comply with the recommendations of ISO 3320.
Other dimensions and all intermediate sizes up to 2700 mm diameter including imperial (inch) sizes can be supplied.
All O-Rings with 12 mm cross section are delivered as special Profilering.

Turcon® Double Delta®

Double Acting

Rubber Energized Plastic Faced Seal

For O-Ring Grooves

Material:
Turcon®, Zurcon® and Elastomer

■ Turcon® Double Delta®

Description

Turcon® Double Delta® is a rubber energised plastic faced seal. The seal is designed to expand and improve the service parameters of O-Rings and is installed in existing O-Ring grooves.

Double Delta® combines the flexibility and response of O-Rings with the wear and friction characteristics of the Turcon® materials in dynamic applications.

The figure below shows the cross section of the Double Delta®.

The double acting performance of the seal follows from the symmetrical cross section which allow the seal to respond to pressure in both directions.

Initial contact pressure is provided by radial compression of the O-Ring. When the system pressure is increased the O-Ring transforms this into additional contact pressure, the contact pressure of the seal is thereby automatically adjusted so sealing is ensured under all service conditions.

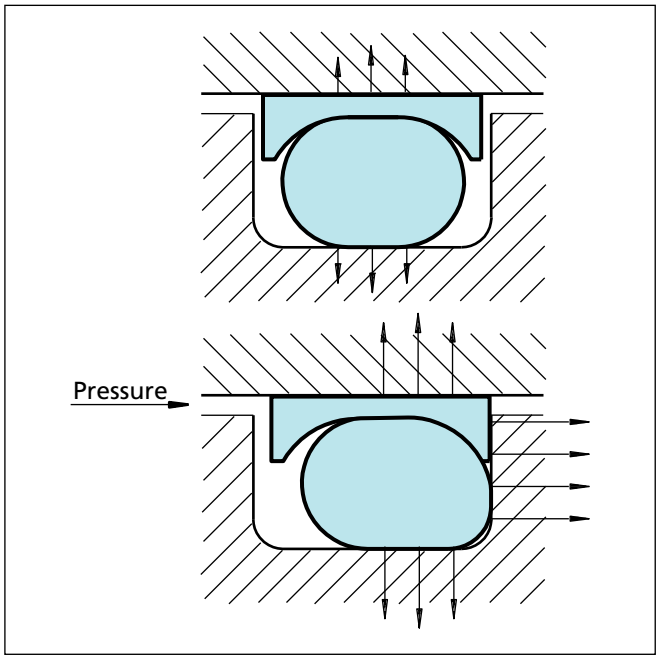

Figure 32 Turcon® Double Delta® without and with pressure

Notches

Turcon® Double Delta® is as standard supplied without radial notches, as the thin radial section of the seal gives good response to pressure variations.

For diameters from 8 mm notches on both sides are optional. These ensure direct pressurizing of the seal under all operating conditions.

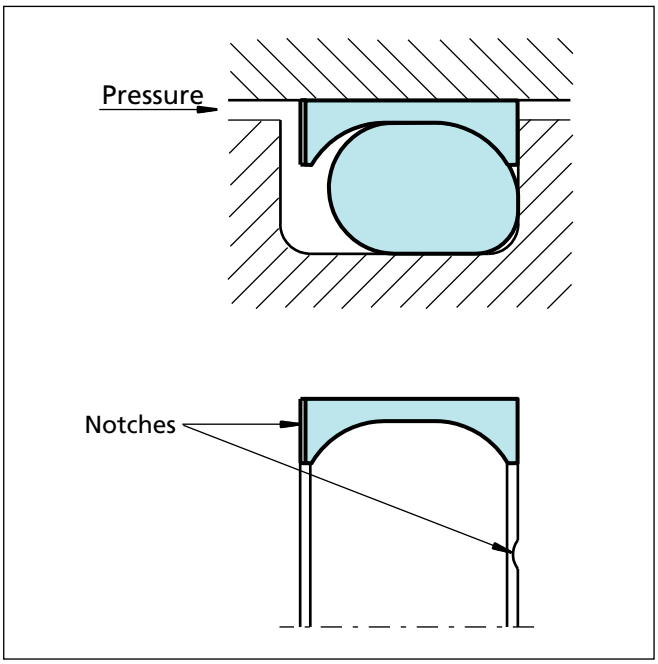

Figure 33 Turcon® Double Delta® with notches

Advantages

- Compact groove dimensions and simple installation
- Low friction without stick-slip
- Resistance against wear and extrusion
- Piston seals available for all diameters from 5 to 999.9 mm
- Standard cross sections cover AS 568A and important metric O-Rings, other cross sections available on request.
- Fits also groove dimensions per MIL-G-5514F

Application Examples

The Turcon® Double Delta® is the recommended sealing element for double acting pistons of hydraulic or pneumatic cylinders in sectors such as:

- Machine tools
- Handling devices
- Manipulators
- Valves
- Chemical process equipment

It is particular recommended for light duty and small diameter applications.

Technical Data

Operating conditions

Pressure:	Up to 35 MPa
Velocity:	Up to 15 m/s
Temperature:	-45 °C to +200 °C *) (according to O-Ring material)
Media:	Mineral oil-based hydraulic fluids, flame retardant hydraulic fluids, environmentally safe hydraulic fluids (bio-oils), phosphate ester, water and others, depending on the seal and O-Ring material compatibility (see Table XXXV)
Clearance:	The maximum permissible radial clearance Smax is shown in Table XXXVI, as a function of the operating pressure and functional diameter

Important Note:
The above data are maximum values and cannot be used at the same time. e.g. the maximum operating speed depends on material type, pressure, temperature and gap value.
Temperature range also dependent on medium.

*) In the case of unpressurized applications in temperatures below 0°C please contact our application engineers for assistance!

■ Materials

The following material combinations have proven effective for hydraulic applications:

All round material for hydraulic applications with reciprocating. short stroke or helical movements in mineral oils, flame retardant hydraulic fluids HFC, phosphate ester, bio-oils or fluids having less satisfactory lubricating properties:

Turcon® Double Delta ®:	Turcon® M12	
O-Ring:	NBR, 70 Shore A	N
	FKM, 70 Shore A	V
	EPDM, 70 Shore	E
Set code:	M12N, M12V or M12E	

For medium to heavy applications with reciprocating movements in mineral oils and other media with good lubrication:

Turcon® Double Delta®:	Turcon® T46	
O-Ring:	NBR, 70 Shore A	N
	FKM, 70 Shore A	V
Set code:	T46N or T46V	

For specific applications, all Turcon® materials are available.

Other viable material combinations are listed in Table XXXV.

■ Design Instructions

Lead-in Chamfers

In order to avoid damage to the seal during installation, lead-in chamfers and rounded edges must be provided on the bore or piston rod (Figure 34).

The minimum length of the lead-in chamfer depends on the profile size of the seal and can be seen from the following tables.

Table XXXIV Lead-in Chamfers

Lead-in Chamfer** Diameter increase ΔD_N min.	O-Ring Cross Section*** d_2
1.4	1.78 - 2.00
1.8	2.40 - 2.62
2.4	3.00 - 4.00
3.2	5.00 - 5.70
4.0	7.00 - 8.40

** Though not less than 1.5 % of service diameter (bore/piston diameter).

*** The O-Ring cross section d_2 can be found in the appropriate tables "Installation dimensions", Table XXXVI , Table XXXVIII and Table XXXIX.

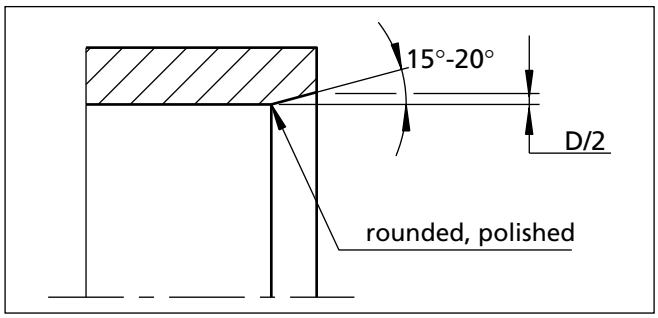

Figure 34 Lead-in chamfers

■ Materials

Table XXXV Turcon® and Zurcon® Materials for Double Delta®

Material, Applications, Properties	Code	O-Ring Material Shore A	Code	O-Ring Operating Temp.* °C	Mating Surface Material	MPa max. Dynamic
Turcon® M12 **First material choice** for seals in linear motion Overall improved properties For new constructions and updating For all commonly applied hydraulic fluids including fluids with low lubrication performance Lowest friction and best sliding properties Lowest wear on seals Improved absorption of abrasive contaminants No wear or abrasion of counter surface Mineral fibre and Additives filled Colour: Dark grey	M12	NBR - 70	N	-30 to +100	Steel Steel hardened Steel chrome plated (rod) Steel plated (rod) Cast iron Stainless steel Titanium	35
		NBR - 70 Low temp.	T	-45 to +80		
		FKM - 70	V	-10 to +20		
Turcon® T05 For lubricating fluids Also for gas service Very low friction Very good sliding and sealing properties Colour: Turquoise	T05	NBR - 70	N	-30 to +100	Steel Steel hardened Steel chrome plated (rod)	20
		NBR - 70 Low temp.	T	-45 to +80		
		FKM - 70	V	-10 to +200		
Turcon® T24 For lubricating and non-lubricating hydraulic fluids Good sealing function Moderate extrusion resistance Carbon filled Colour: Black	T24	NBR - 70	N	-30 to +100	Steel Steel hardened Steel chrome plated (rod) Cast iron Stainless steel Aluminium	20
		NBR - 70 Low temp.	T	-45 to +80		
		FKM - 70	V	-10 to +200		
		EPDM - 70	E**	-45 to +145		
Turcon® T46 For lubricated hydraulics in linear motion High compressive strength High extrusion resistance Very good sliding and wear properties BAM tested Bronze filled Colour: light to dark brown, which may have variations in shading	T46	NBR - 70	N	-30 to +100	Steel hardened Steel chrome plated (rod) Cast iron	35
		NBR - 70 Low temp.	T	-45 to +80		
		FKM - 70	V	-10 to +200		
Zurcon® Z80 For lubricating and non-lubricating fluids Water based fluids, air and gases Dry air pneumatics High abrasion and extrusion resistance For service in abrasive conditions and media with particles Good chemical resistance Limited temperature capability (-60 to +80 °C) UHMWPE (Ultra High Molecular Weight PE) Colour: White to off-white	Z80	NBR - 70	N	-30 to (+100)	Steel Steel hardened Steel chrome plated (rod) Stainless steel Aluminium Ceramic coating	30
		NBR - 70 Low temp.	T	-45 to +80		
		EPDM - 70	E**	-10 to (+145)		

* The O-Ring Operation Temperature is only valid in mineral hydraulic oil. ** Material not suitable for mineral oils.
BAM: Tested by "Bundesanstalt Materialprüfung, Germany". ▭ Highlighted materials are standard.

■ Installation Recommendation

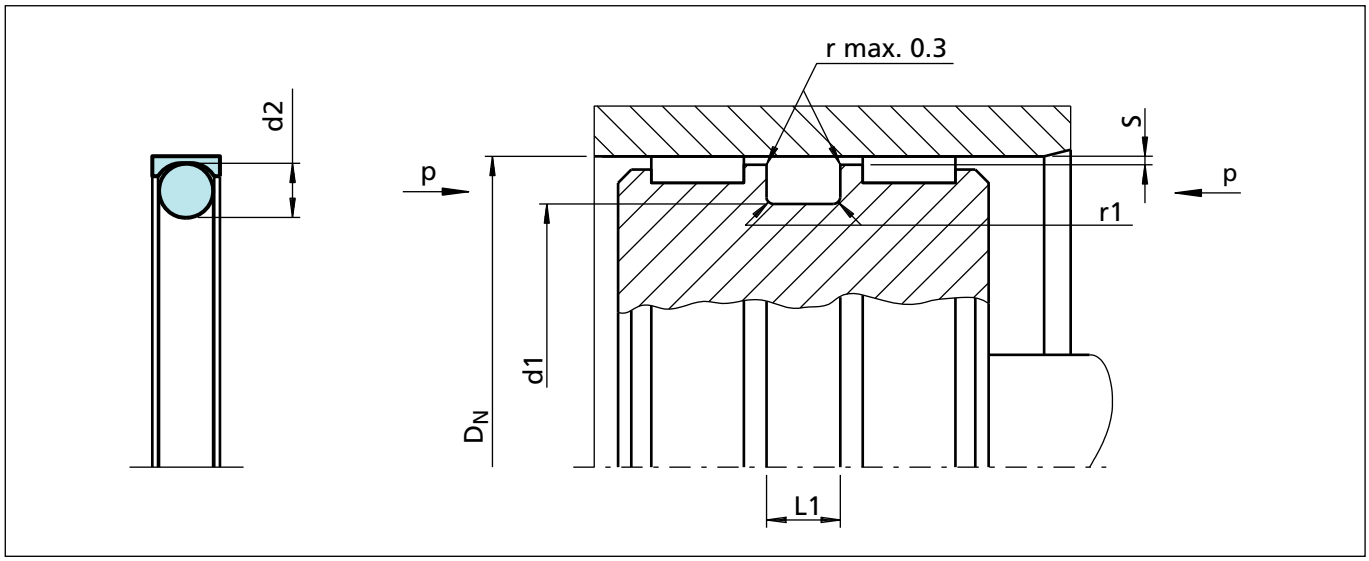

Figure 35 Installation drawing

Table XXXVI Installation dimensions

Series No.	Bore Diameter D_N H9		Groove Diameter	Groove Width	Radius	Radial Clearance S max. *				O-Ring Cross-Sec.
	Standard Range	Extended Range	d_1 h9	L_1 +0.2	r_1	2 MPa	10 MPa	20 MPa	35 MPa	d_2
PDD0	5 - 13.9	5 - 139.9	D_N - 2.9	2.4	0.4	0.10	0.10	0.08	0.05	1.78
PDD1	14 - 24.9	8 - 259.9	D_N - 4.5	3.6	0.4	0.15	0.15	0.10	0.07	2.62
PDD2	25 - 45.9	12 - 469.9	D_N - 6.2	4.8	0.6	0.25	0.20	0.15	0.08	3.53
PDD3	46 - 124.9	20 - 669.9	D_N - 9.4	7.1	0.8	0.35	0.25	0.20	0.10	5.33
PDD4	125 - 669.9	80 - 999.9	D_N - 12.2	9.5	0.8	0.50	0.30	0.25	0.15	7.00
PDD5	670 - 999.9	125 - 999.9	D_N - 15.0	10.0	1.0	0.60	0.40	0.30	0.20	8.40

* TSS Slydring® / Wear Rings are not applicable at very small radical clearance S. Please consult the Slydring® catalog.

Ordering example

Turcon® Double Delta®, complete with O-Ring, standard range, series PDD3 (from Table XXXVI).
Bore diameter: D_N = 80.0 mm
TSS Part No.: PDD300800 (from Table XXXVII)

Select the material from Table XXXV. The corresponding code numbers are appended to the TSS Part No. (from Table XXXVII). Together they form the TSS Article No.
For all intermediate sizes not shown in Table XXXVII, the TSS Article No. can be determined from the example opposite.

** "N" for seals with notches. Available for diameters from 8.0 mm.

For seals for other groove widths/Dimensions please refer to Table XXXVIII and Table XXXIX.

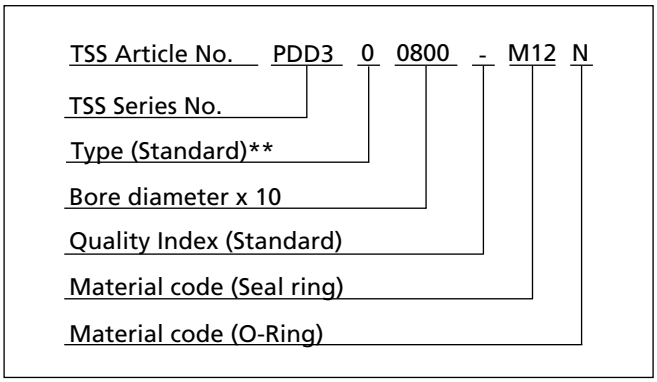

Table XXXVII Installation dimensions / TSS Part No.

Bore Diameter D_N H9	Groove Diameter d_1 h9	Groove Width L_1 +0.2	TSS Part No.	O-Ring Sizes
6.0	3.1	2.4	PDD000060	2.57 x 1.78
8.0	**5.1**	**2.4**	**PDD000080**	**4.47 x 1.78**
9.0	6.1	2.4	PDD000090	5.28 x 1.78
10.0	**7.1**	**2.4**	**PDD000100**	**6.07 x 1.78**
11.0	8.1	2.4	PDD000110	7.65 x 1.78
12.0	**9.1**	**2.4**	**PDD000120**	**8.5 x 1.8**
12.7	9.8	2.4	PDD000127	9.25 x 1.78
14.0	9.5	3.6	PDD100140	9.19 x 2.62
15.0	10.5	3.6	PDD100150	9.19 x 2.62
16.0	**11.5**	3.6	**PDD100160**	**10.77 x 2.62**
18.0	13.5	3.6	PDD100180	12.37 x 2.62
20.0	**15.5**	3.6	**PDD100200**	**13.94 x 2.62**
22.0	17.5	3.6	PDD100220	17.12 x 2.62
24.0	19.5	3.6	PDD100240	18.72 x 2.62
25.0	**18.8**	4.8	**PDD200250**	**18 x 3.55**
25.4	19.2	4.8	PDD200254	18.54 x 3.53
27.0	20.8	4.8	PDD200270	20.22 x 3.53
28.0	21.8	4.8	PDD200280	20.22 x 3.53
30.0	23.8	4.8	PDD200300	23.40 x 3.53
32.0	**25.8**	**4.8**	**PDD200320**	**25.00 x 3.53**
35.0	28.8	4.8	PDD200350	28.17 x 3.53
40.0	**33.8**	**4.8**	**PDD200400**	**32.92 x 3.53**
42.0	35.8	4.8	PDD200420	34.52 x 3.53
45.0	38.8	4.8	PDD200450	37.70 x 3.53
48.0	38.6	7.1	PDD300480	37.47 x 5.33
50.0	**40.6**	**7.1**	**PDD300500**	**40.0 x 5.30**
50.8	41.4	7.1	PDD300508	40.64 x 5.33
52.0	42.6	7.1	PDD300520	40.64 x 5.33
55.0	45.6	7.1	PDD300550	43.82 x 5.33
56.0	46.6	7.1	PDD300560	43.82 x 5.33
60.0	50.6	7.1	PDD300600	50.17 x 5.33
63.0	**53.6**	**7.1**	**PDD300630**	**53.34 x 5.33**
65.0	55.6	7.1	PDD300650	53.34 x 5.33
70.0	60.6	7.1	PDD300700	59.69 x 5.33
75.0	65.6	7.1	PDD300750	62.87 x 5.33
80.0	**70.6**	**7.1**	**PDD300800**	**69.22 x 5.33**

Bore Diameter D_N H9	Groove Diameter d_1 h9	Groove Width L_1 +0.2	TSS Part No.	O-Ring Sizes
85.0	75.6	7.1	PDD300850	72.39 x 5.33
90.0	80.6	7.1	PDD300900	78.74 x 5.33
95.0	85.6	7.1	PDD300950	81.92 x 5.33
100.0	**90.6**	**7.1**	**PDD301000**	**88.27 x 5.33**
110.0	100.6	7.1	PDD301100	97.79 x 5.33
115.0	105.6	7.1	PDD301150	104.14 x 5.33
120.0	110.6	7.1	PDD301200	107.32 x 5.33
125.0	**112.8**	**9.5**	**PDD401250**	**113.67 x 7.0**
130.0	117.8	9.5	PDD401300	116.84 x 7.0
135.0	122.8	9.5	PDD401350	120.02 x 7.0
140.0	127.8	9.5	PDD401400	126.37 x 7.0
150.0	137.8	9.5	PDD401500	135.89 x 7.0
160.0	**147.8**	**9.5**	**PDD401600**	**145.42 x 7.0**
170.0	157.8	9.5	PDD401700	151.77 x 7.0
180.0	167.8	9.5	PDD401800	164.47 x 7.0
190.0	177.8	9.5	PDD401900	177.17 x 7.0
200.0	**187.8**	**9.5**	**PDD402000**	**183.52 x 7.0**
210.0	197.8	9.5	PDD402100	196.22 x 7.0
220.0	207.8	9.5	PDD402200	202.57 x 7.0
230.0	217.8	9.5	PDD402300	215.27 x 7.0
240.0	227.8	9.5	PDD402400	227.97 x 7.0
250.0	**237.8**	**9.5**	**PDD402500**	**236.0 x 7.0**
280.0	267.8	9.5	PDD402800	266.07 x 7.0
300.0	287.8	9.5	PDD403000	278.77 x 7.0
320.0	**307.8**	9.5	**PDD403200**	**304.17 x 7.0**
350.0	337.8	9.5	PDD403500	329.57 x 7.0
400.0	**387.8**	**9.5**	**PDD404000**	**380.37 x 7.0**
420.0	407.8	9.5	PDD404200	405.26 x 7.0
450.0	437.8	9.5	PDD404500	430.66 x 7.0
480.0	467.8	9.5	PDD404800	456.06 x 7.0
500.0	**487.8**	**9.5**	**PDD405000**	**481.46 x 7.0**
600.0	587.5	9.5	PDD406000	582.68 x 7.0
650.0	637.5	9.5	PDD406500	633.48 x 7.0

The bore diameters in **bold** type comply with the recommendations of ISO 3320.
TSS Part No. for other dimensions and **all** intermediate dimensions up to 999.9 mm diameter including imperial (inch) dimensions can be supplied. Larger dimensions up to 2700 mm available upon request.

■ Special Turcon® Double Delta®

Turcon® Double Delta® for one Back-up Ring grooves

Double Delta® is available for designs where grooves for O-Ring with one Back-up Ring are used according to Table XXXVIII.

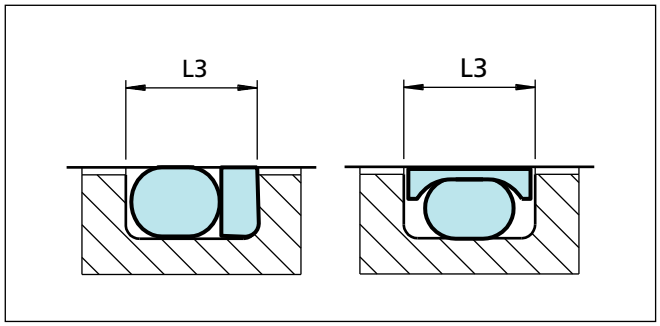

Figure 36 Groove width

Table XXXVIII Seals for one Back-up Ring groove

Series No.	Groove Width	Execution Mark 5th digit		O-Ring Cross Section
	L_3	Without Notch	With Notch*	d_2
PDA0	3.80	0	N	1.78
PDA1	4.65	0	N	2.62
PDA2	5.70	0	N	3.53
PDA3	8.50	0	N	5.33
PDA4	11.20	0	N	7.00
PDA5	12.50	0	N	8.40

* Available for diameters from 8 mm

Ordering example

Double Delta® complete with NBR O-Ring
Bore diameter: D_N = 80 mm
Groove diameter: 70.6 mm
Groove width: 8.5 mm.
TSS Article No.: PDA300800-M12N

* From Table XXXVIII or Table XXXIX
** From Table XXXV
*** From Table XXXV

TSS Article No. PDA3 0 0800 - M12 N

- TSS Series No.*
- Type (Standard)[1)]
- Bore diameter x 10
- Quality Index (Standard)
- Material code (Seal ring)**
- Material code (O-Ring)***

[1)] N for seals with notches, available from dia. 8 mm

Turcon® Double Delta® for metric O-Rings

Double Delta® is available for installation in grooves for metric O-Rings as listed in Table XXXIX.

Table XXXIX Piston Seals for Metric O-Ring Grooves

O-Ring Cross-Section	Groove Diameter	Groove Width	Series No.	Execution Mark 5th digit		Available Range
d_2	d_1 h9	L_1 +0.2		Standard	Notch*	
2.0	D_N - 3.3	2.7	PD2A	0	N	6 - 100.0
2.4	D_N - 4.1	3.2	PD2E	0	N	8 - 160.0
2.5	D_N - 4.3	3.3	PD2F	0	N	8 - 160.0
3.0	D_N - 5.2	4.0	PD3A	0	N	12 - 200.0
4.0	D_N - 7.0	5.2	PD4A	0	N	16 - 300.0
5.0	D_N - 8.8	6.6	PD5A	0	N	20 - 400.0
5.7	D_N - 10.0	7.2	PD5H	0	N	20 - 669.9

* Available for diameters from 8 mm

Turcon® Variseal® M2

Single Acting

Spring Energized Plastic U-Cup

Material:
Turcon® and Zurcon®

■ Turcon® Variseal® M2

Description

The Turcon® Variseal® M2 is a single-acting seal consisting of a U-shaped seal jacket and a V-shaped corrosion resistant spring.

Variseal® M2 has an asymmetric seal profile. The heavy profile of its dynamic lip with an optimized front angle offers good leakage control, reduced friction and long service life.

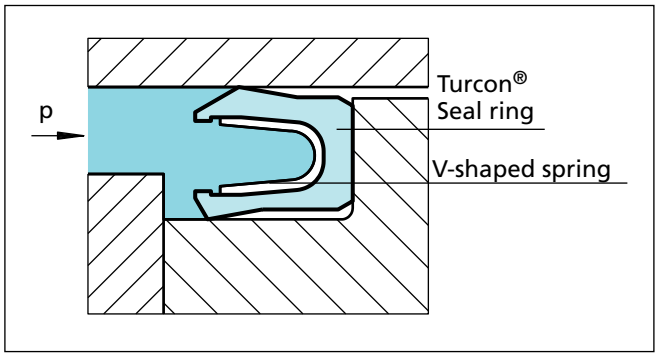

Figure 37 Turcon® Variseal® M2

At low and zero pressure, the metal spring provides the primary sealing force. As the system pressure increases, the main sealing force is achieved by the system pressure and ensures a tight seal from zero to high pressure.

The possibility of matching suitable materials for the seal and the spring allows use in a wide range of applications going beyond the field of hydraulics, e.g. in the chemical, pharmaceutical and foodstuffs industry.

The Variseal® M2 can be sterilized and is available in a special Hi-Clean version where the spring cavity is filled with a Silicone gel preventing contaminants from being entrapped in the seal. This design also works well in applications involving mud, slurries or adhesives to keep grit from packing into the seal cavity and inhibiting the spring action.

For applications with highly viscous media, please contact our Technical department.

Variseal® M2 seals can be installed in grooves to AS4716 and ISO 3771. The seal can only be installed to a limited extent in closed grooves. Installation instructions, see Table VIII.

Advantages

- Resistant to most fluids and chemicals
- Low coefficients of friction
- Stick-slip free operating for precise control
- High abrasion resistance and dimensional stability
- Can handle rapid changes in temperature
- No contamination in contact with foodstuffs, pharmaceutical and medicinal fluids
- Sterilisable
- Unlimited shelf life

Application Examples

The Turcon® Variseal® M2 is the recommended sealing element for all applications requiring stick-slip free operation as well as chemical resistance against almost all media such as:

- Valves
- Pumps
- Separators
- Actuators
- Dosing devices

It requires a mating surface of high quality to avoid high wear rates.

Technical Data

Operating conditions

Pressure:	For static loads: 40 MPa (400 Bar) For dynamic loads: 20 MPa (200 Bar)
Speed:	Reciprocating up to 15 m/s Rotating up to 1 m/s
Temperature:	-70 °C to +260 °C For specific applications beyond indicated range, please enquire
Media:	Virtually all fluids, chemicals and gases

Important Note:
The above data are maximum values, when using standard materials and geometries, and cannot be used at the same time. e.g. the maximum operating speed depends on material type, pressure, temperature and gap value. Temperature range also dependent on medium.

Materials

All materials used are physiologically safe. They contain no odour or taste-affecting substances.

The following material combination has proved effective for most fluid applications:

Seal ring: Turcon® T 40
Spring: Stainless steel, Material No. AISI 301
Material code S

For gas applications use:

Seal ring: T05 or Z80

For use in accordance with the demands of the "Food and Drug Administration", suitable materials are available on request.

Table XL Turcon® and Zurcon® Materials for Variseal® M2

Material, Applications, Properties	Code	Spring Material	Code	Operating Temp.* °C	Mating Surface Material	MPa max.
Turcon® T40 For all lubricating and non-lubricating hydraulic fluids, hydraulic oils without zinc, **water hydraulic, hard mating surfaces.** Surface texture not suitable for gases. Carbon fibre filled Colour: Grey	T40	AISI 301	S	-70 to +260	Steel, hardened Steel, chromeplated	40
Turcon® T05 For all lubricating hydraulic fluids, soft mating surfaces, **very good sliding properties, low friction.** Colour: Turquoise	T05	AISI 301	S	-70 to +260	Steel Steel, chromeplated Cast iron Stainless steel Aluminium Bronze Alloys	20
Zurcon® Z80 For lubricating and non-lubricating hydraulic fluids, high abrasion resistance, very good chemical resistance, limited temperature resistance. **FDA compliance.** Ultra high molecular weight polyethylen Colour: White to off-white	Z80	AISI 301	S	-70 to +80	Steel Steel, chromeplated Stainless steel Aluminium Bronze Ceramic coating	40
Zurcon® Z48 For tight sealing with long wear life, in applications without high temperatures or corrosive chemicals. Colour: Black	Z48	AISI 301	S	-60 to +130	Steel Steel, chromeplated Cast iron Stainless steel Aluminium Bronze Alloys Ceramic coating	40

* Depending on media. Highlighted material is standard.

Installation of Spring Energised Seals

See page 13

■ Installation Recommendation

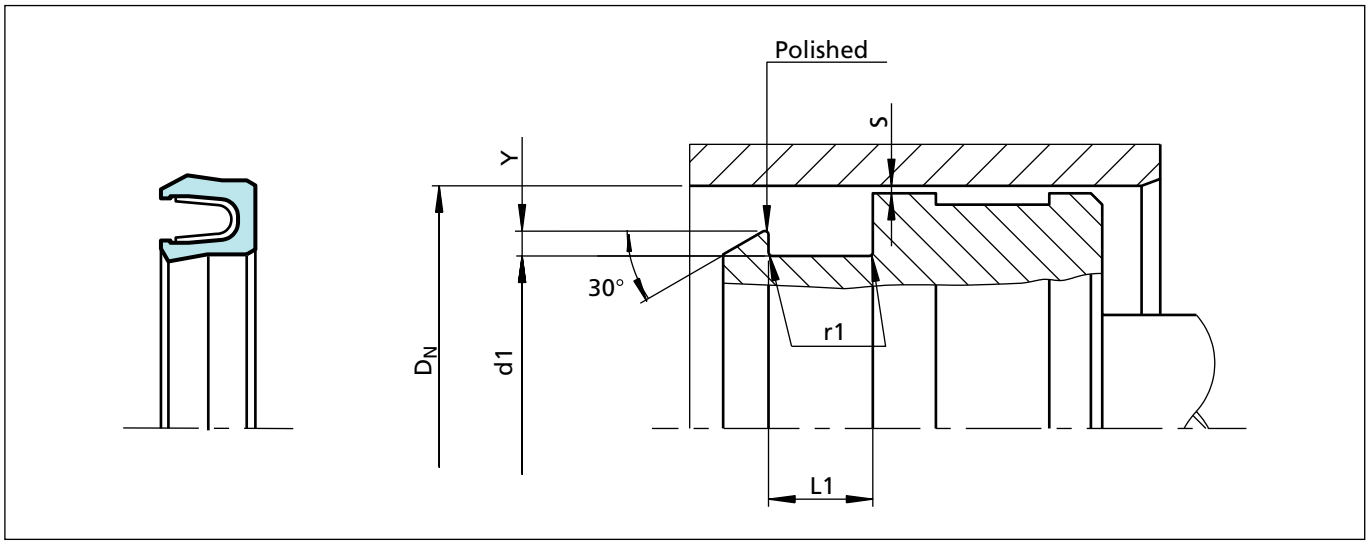

Figure 38 Installation drawing

Table XLI Installation dimensions

Series No.	Bore Diameter D_N H9		Groove Diameter	Groove Width	Radius	Step[2] Height	Radial Clearance S max.*			
	Standard Range	Extended[1] Range	d_1 h9	L_1 +0.2	r_1	Y min.	<2 MPa	<10 MPa	<20 MPa	<40 MPa
PVA0	6.0 - 13.9	6.0 - 40.0	D_N - 2.9	2.4	0.4	0.4	0.20	0.10	0.08	0.05
PVA1	14.0 - 24.9	10.0 - 200.0	D_N - 4.5	3.6	0.4	0.6	0.25	0.15	0.10	0.07
PVA2	25.0 - 45.9	16.0 - 400.0	D_N - 6.2	4.8	0.6	0.7	0.35	0.20	0.15	0.08
PVA3	46.0 - 124.9	28.0 - 700.0	D_N - 9.4	7.1	0.8	0.8	0.50	0.25	0.20	0.10
PVA4	125.0 - 999.9	45.0 - 999.9	D_N - 12.2	9.5	0.8	0.9	0.60	0.30	0.25	0.12
PVA5	1000.0 - 2500.0	100.0 - 2500.0	D_N - 19.0	15.0	0.8	0.9	0.90	0.50	0.40	0.20

* At pressures **> 40 MPa** use diameter tolerance H8/f8 (bore/piston) in area of the seal. [1] Available on request. [2] Ymax = 0.035 x D_N

Ordering example

Turcon® Variseal®M2, standard range, Series PVA3 (from Table XLI).
Bore diameter: D_N = 80.0 mm
TSS Part No.: PVA300800 (from Table XLII)

Select the material from Table XL. The corresponding code numbers are appended to the TSS Part No. (from Table XLII). Together they form the TSS Article No.
For all intermediate sizes not shown in Table XLII, the TSS Article No. can be determined from the example opposite.

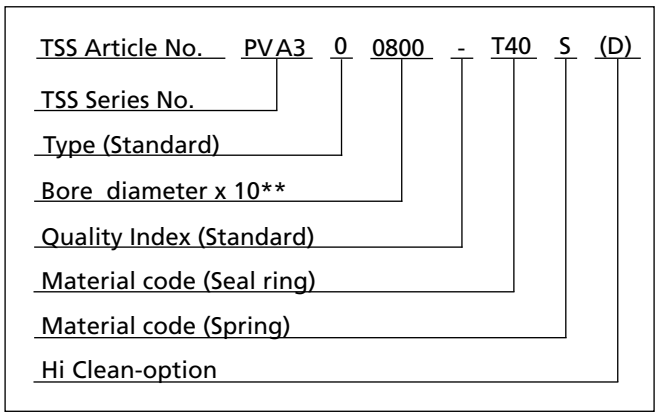

** For diameters ≥ 1000.0 mm multiply only by factor 1.
Example: PVA5 for diameter 1200.0 mm.
TSS Article No.: PVA5**X1200** - T40S.

Table XLII Installation dimensions / TSS Part No.

Bore Diameter	Groove Diameter	Groove Width	TSS Part No.
D_N H9	d_1 h9	L_1 +0.2	
6.0	3.1	2.4	PVA000060
8.0	**5.1**	**2.4**	**PVA000080**
10.0	**7.1**	**2.4**	**PVA000100**
12.0	**9.1**	**2.4**	**PVA000120**
14.0	9.5	3.6	PVA100140
15.0	10.5	3.6	PVA100150
16.0	**11.5**	**3.6**	**PVA100160**
18.0	13.5	3.6	PVA100180
20.0	**15.5**	**3.6**	**PVA100200**
22.0	17.5	3.6	PVA100220
25.0	**18.8**	**4.8**	**PVA200250**
28.0	21.8	4.8	PVA200280
30.0	23.8	4.8	PVA200300
32.0	**25.8**	**4.8**	**PVA200320**
35.0	28.8	4.8	PVA200350
40.0	**33.8**	**4.8**	**PVA200400**
42.0	35.8	4.8	PVA200420
45.0	38.8	4.8	PVA200450
48.0	38.6	7.1	PVA300480
50.0	**40.6**	**7.1**	**PVA300500**
52.0	42.6	7.1	PVA300520
55.0	45.6	7.1	PVA300550
56.0	46.6	7.1	PVA300560
60.0	50.6	7.1	PVA300600

Bore Diameter	Groove Diameter	Groove Width	TSS Part No.
D_N H9	d_1 h9	L_1 +0.2	
63.0	**53.6**	**7.1**	**PVA300630**
65.0	55.6	7.1	PVA300650
70.0	60.6	7.1	PVA300700
75.0	65.6	7.1	PVA300750
80.0	**70.6**	**7.1**	**PVA300800**
85.0	75.6	7.1	PVA300850
90.0	80.6	7.1	PVA300900
95.0	85.6	7.1	PVA300950
100.0	**90.6**	**7.1**	**PVA301000**
110.0	100.6	7.1	PVA301100
115.0	105.6	7.1	PVA301150
120.0	110.6	7.1	PVA301200
125.0	**112.8**	**9.5**	**PVA401250**
130.0	117.8	9.5	PVA401300
135.0	122.8	9.5	PVA401350
140.0	127.8	9.5	PVA401400
150.0	137.8	9.5	PVA401500
160.0	**147.8**	**9.5**	**PVA401600**
170.0	157.8	9.5	PVA401700
180.0	167.8	9.5	PVA401800
190.0	177.8	9.5	PVA401900
200.0	**187.8**	**9.5**	**PVA402000**
210.0	197.8	9.5	PVA402100
220.0	207.8	9.5	PVA402200

Bore Diameter	Groove Diameter	Groove Width	TSS Part No.
D_N H9	d_1 h9	L_1 +0.2	
230.0	217.8	9.5	PVA402300
240.0	227.8	9.5	PVA402400
250.0	**237.8**	**9.5**	**PVA402500**
280.0	267.8	9.5	PVA402800
300.0	287.8	9.5	PVA403000
320.0	**307.8**	**9.5**	**PVA403200**
350.0	337.8	9.5	PVA403500
400.0	**387.8**	**9.5**	**PVA404000**
420.0	407.8	9.5	PVA404200
450.0	437.8	9.5	PVA404500
480.0	467.8	9.5	PVA404800
500.0	**487.8**	**9.5**	**PVA405000**

The bore diameters in **bold** type comply with the recommendations of ISO 3320.
Other dimensions and all intermediate sizes up to 2.700 mm diameter including imperial (inch) sizes can be supplied.

Turcon® VL Seal®

Single Acting

Rubber Energized Plastic Faced Seal

Material:
Turcon®, Zurcon® and Elastomer

Description

Turcon® VL Seal® is a new generation unidirectional Rod seal for the same groove dimensions as standard O-Rings, see Figure 39.

The design has taken the latest empirical and theoretical experience into account in order to optimise performance, friction, leakage and service life. This has been achieved through FEA simulation, in-house testing and qualification in customer applications.

The VL Seal® has no static lip, instead static sealing is effectively provided by the O-Ring. The O-Ring is protected from damage under pressure cycles by the concave seal back which supports the O-Ring and keeps it in position also at high working pressure.

The VL Seal® is designed with hydrodynamic back-pumping effect, which allows the seal to relieve pressure trapped between seals in tandem configuration.

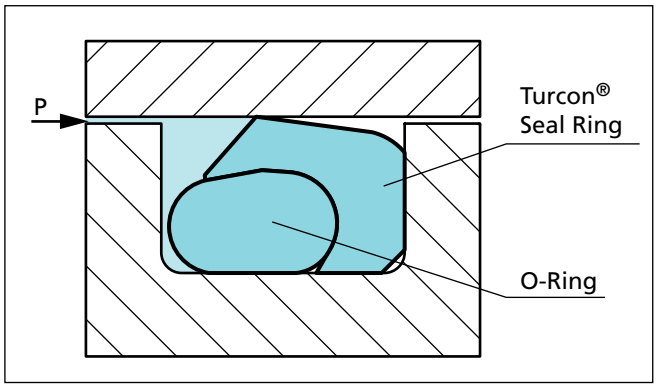

Figure 39 Turcon® VL Seal® mounted in O-Ring groove

Method of operation

The sealing mechanism of the Turcon® VL Seal® is based on the hydrodynamic properties of the seal. The specially formed seal edge has a steep contact pressure gradient on the high pressure side and a shallow contact pressure gradient on the low pressure side. This ensures that the fluid film adhering to the piston rod is returned to the high pressure chamber on the return stroke of the rod. This prevents the micro-fluid layer, which is carried out of the high pressure chamber when the piston rod is extended, from causing leaks.

This return delivery property prevents the build-up of inter-seas pressure normally associated with tandem seal configurations. Inter-seal pressure depends on the system pressure, speed, stroke length and groove design.

Advantages

- Groove design with shallow radial depth
- Tight leakage control
- Low friction with small contact area between seal and counter surface
- Featuring the Turcon® Stepseal® 2K back pumping effect
- Utilize standard O-Ring installation groove
- Available in all diameter sizes from 10 to 2700 mm

Application Examples

The VL Seal® is recommended for hydraulics and general machine construction as an alternative to Turcon® Stepseal® 2K and other single acting seals according to their individual advantages.

- Machine tools
- Automation
- Handling devises
- Single acting cylinders
- Automobile industry
- Servo hydraulics
- Down-hole tools
- O-Ring replacement

Technical Data

Operating conditions:

Pressure:	Up to 60 MPa
Speed:	Up to 15 m/s for Turcon® materials with reciprocating movements frequency up to 5 Hz
Temperature:	-45 °C to +200 °C (depending on seal and O-Ring material)
Media:	Mineral oil-based hydraulic fluids, flame retardant hydraulic fluids, environmentally safe hydraulic, fluids (bio-oils), phosphate ester, water and others, depending on the seal and O-Ring material compatibility (see Table XLIII)
Clearance:	The maximum permissible radial clearance S_{max} is shown in Table XLIV, as a function of the operating pressure and functional diameter.

Important Note:
The above data are maximum values and cannot be used at the same time, e. g. the maximum operating speed depends on material type, pressure, temperature and gap value.

Important Note for the piston version:
In the case of unpressurized applications in temperatures below 0°C please contact our application engineers for assistance!

Materials

The following material combinations have proven effective for hydraulic applications:

All round material for hydraulic applications with reciprocating, short stroke or helical movements in mineral oils, flame retardant hydraulic fluids HFC, phosphate ester, bio-oils or fluids having less satisfactory lubricating properties:

Turcon® VL Seal®:	Turcon® M12	
O-Ring:	NBR, 70 Shore A	N
	FKM, 70 Shore A	V
Set code:	M12N or M12V	

For medium to heavy applications with reciprocating movements in mineral oils and other media with good lubrication:

Turcon® VL Seal®:	Turcon® T46	
O-Ring:	NBR, 70 Shore A	N
	FKM, 70 Shore A	V
Set code:	T46N or T46V	

Zurcon® Z52 is recommended for VL Seal® as alternative to polyurethane U-Cups especially outside the size range of these products.

For specific applications, all Turcon® materials are available.

Other viable material combinations are listed in Table XLIII.

Installation dimensions

The VL Seal® is dimensionally interchangeable with seals for O-Ring housings, like Vectorseal™, Double Delta® and Turcon® Variseal® M2. Groove dimensions, radial clearances and recommended seal series in relation to diameter are as illustrated in Table XLIV.

VL Seal® is preferably installed in closed grooves according to Figure 10 page 13. Depending on type and size installation in split grooves is also possible. Recommended minimum diameters for installation in closed grooves, see Table VI page 13.

Radial Notch

Turcon® VL Seal® can be delivered with radial notches at the "back side" (low pressure side).

This is an advantage if the seal is used in rotary applications. The notches can prevent the seal from rotating in the groove by avoiding pressurised fluid being trapped between seal and groove corner.

Table XLIII Turcon® and Zurcon® Materials for VL Seal®

Material, Applications, Properties	Code	O–Ring Material Shore A	Code	O-Ring Operating Temp.* °C	Mating Surface Material	MPa max. Dyna-mic
Turcon® M12 **First material choice** for seals in linear motion Overall improved properties For new constructions and updating For all commonly applied hydraulic fluids including fluids with low lubrication performance Lowest friction and best sliding properties Lowest wear on seals Improved absorption of abrasive contaminants No wear or abrasion of counter surface Mineral fibre and Additives filled Colour: Dark grey	M12	NBR - 70	N	-30 to +100	Steel Steel hardened Steel chrome plated (rod) Steel plated (rod) Cast iron Stainless steel Titanium	50
		NBR - 70 Low temp.	T	-45 to +80		
		FKM - 70	V	-20 to +200		
Turcon® T05 For lubricating fluids Also for gas service Very low friction Very good sliding and sealing properties Colour: Turquoise	T05	NBR - 70	N	-30 to +100	Steel hardened Steel chrome plated (rod)	20
		NBR - 70 Low temp.	T	-45 to +80		
		FKM - 70	V	-10 to +200		
Turcon® T08 For lubricating fluids and linear motion **Very high compressive strength and extrusion resistance** Hard counter surfaces is recommended Bronze filled Colour: Light to dark brown, which may have variations in shading	T08	NBR - 70	N	-30 to +100	Steel hardened Steel chrome plated (rod) Cast iron	60
		NBR - 70 Low temp.	T	-45 to +80		
		FKM - 70	V	-10 to +200		
Turcon® T10 For hydraulic and pneumatic For linear motion in lubricating and non-lubricating fluids High extrusion resistance Good chemical resistance Not for electrically conducting fluids BAM tested Carbon, graphite filled Colour: Black	T10	NBR - 70	N	-30 to +100	Steel Steel hardened Steel chrome plated (rod) Stainless steel	40
		NBR - 70 Low temp.	T	-45 to +80		
		FKM - 70	V	-10 to +200		
		EPDM - 70	E**	-45 to +145		
Turcon® T29 For lubricating and non-lubricating fluids Good extrusion resistance Surface texture is not suitable for gas sealing Not for electrically conducting fluids Carbon fibre filled Colour: Grey	T29	NBR - 70	N	-30 to +100	Steel Steel hardened Steel chrome plated (rod) Cast iron Stainless steel	30
		NBR - 70 Low temp.	T	-45 to +80		
		FKM - 70	V	-10 to +200		
		EPDM - 70	E**	-45 to +145		
Turcon® T40 For lubricating and non-lubricating fluids High frequency and short strokes **Water hydraulics** Surface texture is not suitable for gas sealing Carbon fibre filled Colour: Grey	T40	NBR - 70	N	-30 to +100	Steel Steel hardened Steel chrome plated (rod) Cast iron Stainless steel Aluminium	25
		NBR - 70 Low temp.	T	-45 to +80		
		FKM - 70	V	-10 to +200		
		EPDM - 70	E**	-45 to +145		

* The O-Ring Operation Temperature is only valid in mineral hydraulic oil. ** Material not suitable for mineral oils.

Highlighted materials are standard.

Material, Applications, Properties	Code	O–Ring Material Shore A	Code	O-Ring Operating Temp.* °C	Mating Surface Material	MPa max. Dynamic
Turcon® T46 For lubricated hydraulics in linear motion High compressive strength High extrusion resistance Very good sliding and wear properties BAM tested Bronze filled Colour: Light to dark brown, which may have variations in shading	T46	NBR - 70	N	-30 to +100	Steel hardened Steel chrome plated (rod) Cast iron	50
		NBR - 70 Low temp.	T	-45 to +80		
		FKM - 70	V	-10 to +200		
Zurcon® Z51*** For mineral oil based fluids **Very high abrasion and extrusion resistance** For counter surface with rougher surface finish Limited chemical resistance Max. working temperature 110 °C Cast polyurethane Colour: Yellow to light-brown	Z51	NBR - 70	N	-30 to +100	Steel Steel hardened Steel chrome plated (rod) Cast iron Stainless steel Ceramic coating	60
		NBR - 70 Low temp.	T	-45 to +80		
Zurcon® Z52*** For mineral oil based fluids Linear and slowly turning movements High abrasion resistance For counter surface with rougher surface finish Good extrusion resistance Limited chemical resistance Max. working temperature 110 °C Cast polyurethane Colour: Turquoise.	Z52	NBR - 70	N	-30 to +100	Steel Steel hardened Steel chrome plated (rod) Cast iron Stainless steel Aluminium Bronze Ceramic coating	25
		NBR - 70 Low temp.	T	-45 to +80		
Zurcon® Z80 For lubricating and non-lubricating fluids Water based fluids, air and gases Dry air pneumatics High abrasion and extrusion resistance For service in abrasive conditions and media with particles Good chemical resistance Limited temperature capability (-60 to +80 °C) UHMWPE (Ultra High Molecular Weight Polyethylene) Colour: White to off-white	Z80	NBR - 70	N	-30 to (+100)	Steel Steel hardened Steel chrome plated (rod) Stainless steel Aluminium Ceramic coating	35
		NBR - 70 Low temp.	T	-45 to +80		
		EPDM - 70	E**	-45 to (+145)		

* The O-Ring Operation Temperature is only valid in mineral hydraulic oil. ** Material not suitable for mineral oils.

Highlighted materials are standard.

■ Installation Recommendation

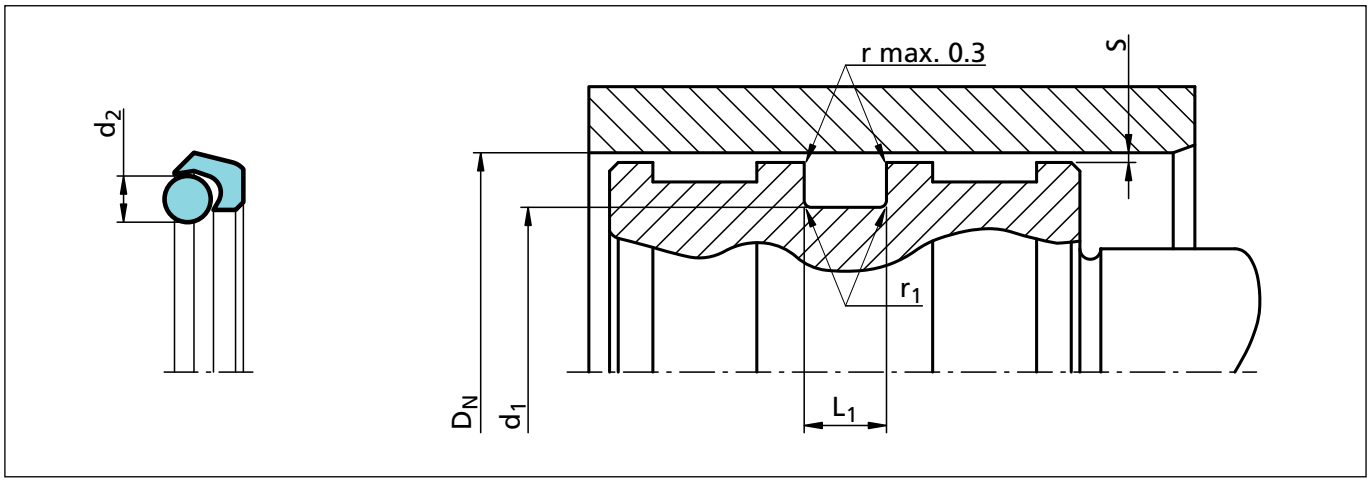

Figure 40 Installation drawing

Table XLIV Installation dimensions - Standard Recommendations

Bore Diameter D_N H9			Groove Diameter d_1 h9	Groove Width L_1 +0.2	Radius r_1	Radial Clearance* S_{max}			O-Ring Cross-Section d_2
Series No.	Standard Application	Available Range				10 MPa	20 MPa	30 MPa	
PEL10	14 - 24.9	10 - 100.0	D_N - 4.5	3.6	0.4	0.40	0.25	0.15	1.78
PEL20	25 - 45.9	16 - 200.0	D_N - 6.2	4.8	0.6	0.40	0.25	0.20	2.62
PEL30	46 - 124.9	28 - 400.0	D_N - 9.4	7.1	0.8	0.50	0.30	0.20	3.53
PEL40	125 - 399.9	45 - 650.0	D_N - 12.2	9.5	0.8	0.60	0.35	0.25	5.33
PEL50	400 - 649.9	125 - 999.9	D_N - 15.9	12.2	0.8	0.70	0.50	0.30	7.00
PEL60	650 - 999.9	400 - 999.9	D_N - 19.0	15.0	0.8	1.00	0.70	0.60	8.40
PEL6X	≥ 1000	1000 - 2700	D_N - 19.0	15.0	0.8	1.00	0.70	0.60	8.40

* At pressures **> 40 MPa** use diameter tolerance H8/f8 (bore/piston) in area of the seal or consult TSS for alternative material or profiles.
TSS Slydring® / Wear Rings are not applicable at very small radical clearance S. Please consult the Slydring® catalog.
For minimum diameter installation in closed grooves see Table VI, page 13.

Ordering example

Turcon® VL Seal® complete with O-Ring, standard application:

Series: PEL30 (from Table XLIV).
Bore diameter: D_N = 80.0 mm
TSS Part No.: PEL300800 (from Table XLV).

Select the material from Table XLIII.
The corresponding code numbers are appended to the TSS Part No.
Together these form the TSS Article Number.

The TSS Article Number for all intermediate sizes not shown in Table XLV can be determined following the example below.

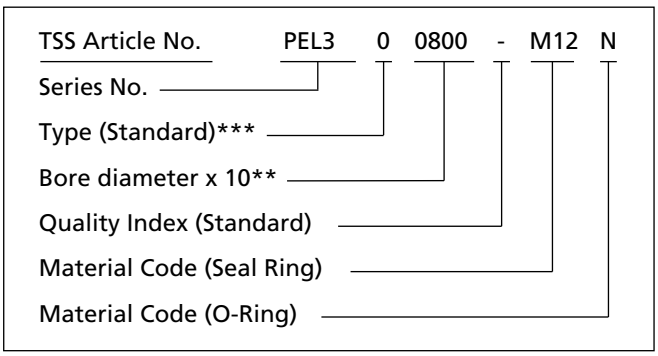

** For diameters ≥ 1000.0 mm multiply only by factor 1.
Example: PEL6X for diameter 1200.0 mm.
TSS Article No.: PEL6X**1200** - M12N.

*** Use suffix "N" for seals with radial notches, for diameter D_N < 1000 mm. (Radial notches for diameter D_N ≥ 1000 mm special part number is required).

Table XLV Installation dimensions / Part No.

Bore	Groove Dia.	Groove Width	Part No.	O-Ring Sizes
D_N H9	d_1 h9	L_1 +0.2		
10.0	5.5	3.6	PEL100100	4.80 x 1.80
12.0	**7.5**	**3.6**	**PEL100120**	**7.10 x 1.80**
14.0	9.5	3.6	PEL100140	8.75 x 1.80
16.0	**11.5**	**3.6**	**PEL100160**	**11.20 x 1.80**
16.0	**9.8**	**4.8**	**PEL200160**	**9.19 x 2.62**
18.0	13.5	3.6	PEL100180	13.20 x 1.80
18.0	11.8	4.8	PEL200180	10.77 x 2.62
20.0	**15.5**	**3.6**	**PEL100200**	**14.00 x 1.78**
20.0	**13.8**	**4.8**	**PEL200200**	**12.37 x 2.62**
22.0	17.5	3.6	PEL100220	17.17 x 1.78
22.0	15.8	4.8	PEL200220	14.50 x 2.65
25.0	**20.5**	**3.6**	**PEL100250**	**20.35 x 1.78**
25.0	**18.8**	**4.8**	**PEL200250**	**18.00 x 2.65**
28.0	21.8	4.8	PEL200280	20.29 x 2.62
28.0	18.6	7.1	PEL300280	17.04 x 3.53
30.0	25.5	3.6	PEL100300	25.12 x 1.78
30.0	23.8	4.8	PEL200300	23.47 x 2.62
32.0	**27.5**	**3.6**	**PEL100320**	**26.70 x 1.78**
32.0	**25.8**	**4.8**	**PEL200320**	**25.07 x 2.62**
32.0	22.6	7.1	PEL300320	21.82 x 3.53
35.0	28.8	4.8	PEL200350	28.24 x 2.62
40.0	**35.5**	**3.6**	**PEL100400**	**34.65 x 1.78**
40.0	**33.8**	**4.8**	**PEL200400**	**32.99 x 2.62**
40.0	30.6	7.1	PEL300400	29.75 x 3.53
42.0	35.8	4.8	PEL200420	34.59 x 2.62
45.0	38.8	4.8	PEL200450	37.77 x 2.62
45.0	32.8	9.5	PEL400450	31.12 x 5.33
48.0	41.8	4.8	PEL200480	40.94 x 2.62
50.0	**43.8**	**4.8**	**PEL200500**	**42.52 x 2.62**
50.0	**40.6**	**7.1**	**PEL300500**	**40.87 x 3.53**
50.0	37.8	9.5	PEL400500	37.47 x 5.33
52.0	45.8	4.8	PEL200520	45.69 x 2.62
55.0	48.8	4.8	PEL200550	48.90 x 2.62
60.0	50.6	7.1	PEL300600	50.39 x 3.53
63.0	**56.8**	**4.8**	**PEL200630**	**56.82 x 2.62**
63.0	**53.6**	**7.1**	**PEL300630**	**53.57 x 3.53**

Bore	Groove Dia.	Groove Width	Part No.	O-Ring Sizes
D_N H9	d_1 h9	L_1 +0.2		
63.0	50.8	9.5	PEL400630	50.17 x 5.33
65.0	55.6	7.1	PEL300650	53.57 x 3.53
70.0	63.8	4.8	PEL200700	63.17 x 2.62
70.0	60.6	7.1	PEL300700	59.92 x 3.53
75.0	65.6	7.1	PEL300750	63.09 x 3.53
80.0	**70.6**	**7.1**	**PEL300800**	**69.44 x 3.53**
80.0	67.8	9.5	PEL400800	66.04 x 5.33
85.0	75.6	7.1	PEL300850	75.79 x 3.53
85.0	72.8	9.5	PEL400850	72.39 x 5.33
90.0	80.6	7.1	PEL300900	78.97 x 3.53
90.0	77.8	9.5	PEL400900	75.57 x 5.33
95.0	85.6	7.1	PEL300950	85.32 x 3.53
95.0	82.8	9.5	PEL400950	81.92 x 5.33
100.0	**90.6**	**7.1**	**PEL301000**	**88.49 x 3.53**
100.0	87.8	9.5	PEL401000	88.27 x 5.33
105.0	95.6	7.1	PEL301050	94.84 x 3.53
105.0	92.8	9.5	PEL401050	91.44 x 5.33
106.0	96.6	7.1	PEL301060	94.84 x 3.53
110.0	100.6	7.1	PEL301100	101.19 x 3.53
110.0	97.8	9.5	PEL401100	97.79 x 5.33
115.0	105.6	7.1	PEL301150	104.37 x 3.53
115.0	102.8	9.5	PEL401150	100.97 x 5.33
120.0	110.6	7.1	PEL301200	110.72 x 3.53
120.0	107.8	9.5	PEL401200	107.32 x 5.33
125.0	**115.6**	**7.1**	**PEL301250**	**113.89 x 3.53**
125.0	**112.8**	**9.5**	**PEL401250**	**110.49 x 5.33**
125.0	109.1	12.2	PEL501250	107.35 x 7.00
130.0	120.6	7.1	PEL301300	120.24 x 3.53
130.0	117.8	9.5	PEL401300	116.84 x 5.33
135.0	122.8	9.5	PEL401350	123.19 x 5.33
140.0	127.8	9.5	PEL401400	126.37 x 5.33
140.0	124.1	12.2	PEL501400	123.19 x 7.00
145.0	132.8	9.5	PEL401450	132.72 x 5.33
150.0	137.8	9.5	PEL401500	135.89 x 5.33
155.0	145.6	7.1	PEL301550	145.64 x 3.53
160.0	**150.6**	**7.1**	**PEL301600**	**148.82 x 3.53**

Bore	Groove Dia.	Groove Width	Part No.	O-Ring Sizes
D_N H9	d_1 h9	L_1 +0.2		
160.0	**147.8**	**9.5**	**PEL401600**	**145.42 x 5.33**
160.0	144.1	12.2	PEL501600	142.24 x 7.00
165.0	155.6	7.1	PEL301650	151.99 x 3.53
165.0	152.8	9.5	PEL401650	151.77 x 5.33
170.0	157.8	9.5	PEL401700	158.12 x 5.33
175.0	165.6	7.1	PEL301750	164.69 x 3.53
180.0	170.6	7.1	PEL301800	171.04 x 3.53
180.0	167.8	9.5	PEL401800	164.47 x 5.33
180.0	164.1	12.2	PEL501800	164.47 x 7.00
190.0	180.6	7.1	PEL301900	177.39 x 3.53
190.0	177.8	9.5	PEL401900	177.17 x 5.33
200.0	**190.6**	**7.1**	**PEL302000**	**190.09 x 3.53**
200.0	**187.8**	**9.5**	**PEL402000**	**189.87 x 5.33**
200.0	184.1	12.2	PEL502000	183.52 x 7.00
205.0	192.8	9.5	PEL402050	189.87 x 5.33
210.0	197.8	9.5	PEL402100	196.22 x 5.33
220.0	210.6	7.1	PEL302200	209.14 x 3.53
220.0	207.8	9.5	PEL402200	208.92 x 5.33
220.0	204.1	12.2	PEL502200	202.57 x 7.00
230.0	217.8	9.5	PEL402300	215.27 x 5.33
240.0	227.8	9.5	PEL402400	227.97 x 5.33
250.0	**237.8**	**9.5**	**PEL402500**	**234.32 x 5.33**
250.0	234.1	12.2	PEL502500	227.97 x 7.00
300.0	284.1	12.2	PEL503000	278.77 x 7.00
306.0	293.8	9.5	PEL403060	291.47 x 5.33
320.0	**307.8**	**9.5**	**PEL403200**	**304.17 x 5.33**
320.0	304.1	12.2	PEL503200	304.17 x 7.00
345.0	332.8	9.5	PEL403450	329.57 x 5.33
350.0	334.1	12.2	PEL503500	329.57 x 7.00
400.0	384.1	12.2	PEL504000	380.37 x 7.00
400.0	381.0	15.0	PEL604000	379 x 8.40
440.0	424.1	12.2	PEL504400	430.66 x 7.00
450.0	431.0	15.0	PEL604500	429 x 8.40
500.0	484.1	12.2	PEL505000	481.38 x 7.00
500.0	481.0	15.0	PEL605000	479 x 8.40
520.0	507.8	9.5	PEL405200	506.78 x 5.33

Bore	Groove Dia.	Groove Width	Part No.	O-Ring Sizes
D_N H9	d_1 h9	L_1 +0.2		
540.0	524.1	12.2	PEL505400	532.26 x 7.00
540.0	521.0	15.0	PEL605400	519 x 8.40
600.0	584.1	12.2	PEL506000	582.68 x 7.00
600.0	581.0	15.0	PEL606000	579 x 8.40
650.0	634.1	12.2	PEL506500	633.48 x 7.00
650.0	631.0	15.0	PEL606500	629 x 8.40
700.0	684.1	12.2	PEL507000	682 x 7.00
700.0	681.0	15.0	PEL607000	679 x 8.40
800.0	784.1	12.2	PEL508000	782 x 7.00
800.0	781.0	15.0	PEL608000	779 x 8.40
860.0	844.1	12.2	PEL508600	842 x 7.00
900.0	884.1	12.2	PEL509000	882 x 7.00
900.0	881.0	15.0	PEL609000	879 x 8.40
920.0	904.1	12.2	PEL509200	902 x 7.00
1000.0	981.0	15.0	PEL6X1000	979 x 8.40
1200.0	1181.0	15.0	PEL6X1200	1179 x 8.40
1500.0	1481.0	15.0	PEL6X1500	1479 x 8.40
2000.0	1981.0	15.0	PEL6X2000	1979 x 8.40
2700.0	2681.0	15.0	PEL6X2700	2679 x 8.40

The bore diameters in **bold** type are in accordance with the recommendations of ISO 3320.

Other dimensions and all intermediate sizes up to 2700 mm diameter including imperial (inch) sizes can be supplied.

Zurcon® U-Cup PUA

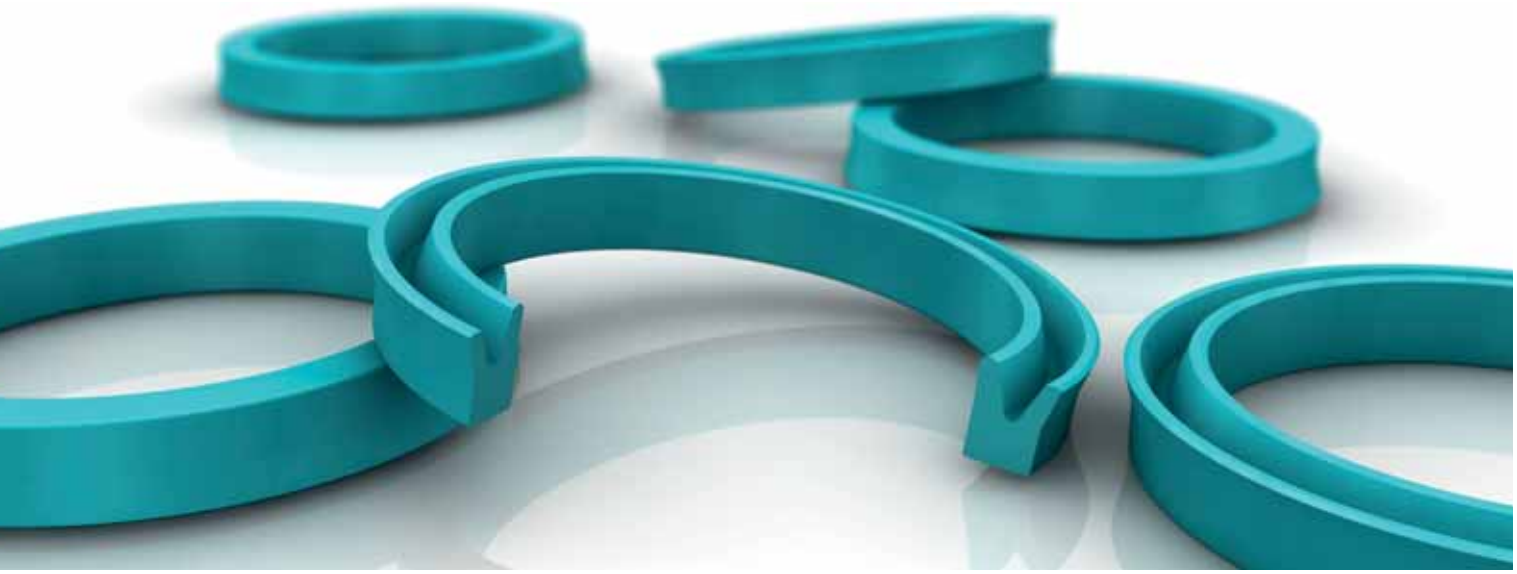

Single Acting

Asymmetric, Single Lip

Material:
Zurcon®

■ Piston U-Cup PUA

Description

The U-Cup is a single acting piston seal out of injection moulded polyurethane. It is provided with a robust dynamic sealing lip and a wide contact area of the static lip, which guaranties an effective positioning in the groove.

The profile is suitable for pressures up to 40 MPa provided that the extrusion gap is adapted to the pressure level.

Thanks to the elasticity of the polyurethane material the U Cup can easily be installed in closed grooves.

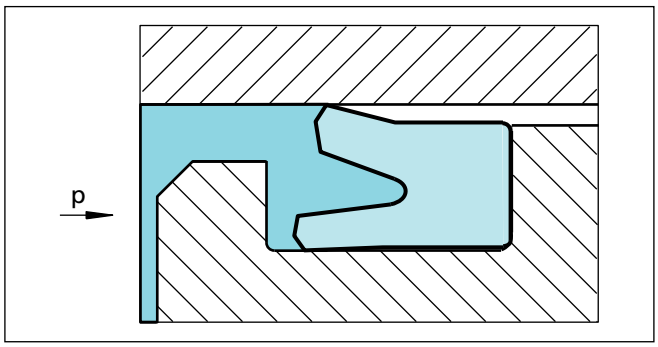

Figure 41 Piston U-Cup Type PUA

Advantages

- Simple groove design
- High abrasion resistance
- Long service life
- Effective sealing effect even with non excellent mating surface finish

Application Examples

The U-Cup is the recommended sealing element for single acting pistons of hydraulic components such as:

- Presses
- Lift platforms
- Aftermarket

Technical Data

Operating conditions

Pressure: Up to 40 MPa

Speed: Up to 0.5 m/s

Temperature: from -35 °C to + 110 °C

Media: Mineral oil based hydraulic fluids

Clearance: From Table XLVI the maximum value of the radial clearance Smax can be selected for dimensioning the piston.
The values indicated in this table must be reduced by 30% when temperature exceeds 80 °C.

Table XLVI Clearance

Operating Pressure MPa	Radial Clearance S max.	
	d_N <60 mm	d_N >60 mm
5	0.40	0.50
10	0.30	0.40
20	0.20	0.30
30	0.15	0.20
40	0.10	0.15

Important Note:
The above data are maximum values and cannot be used at the same time. e.g. the maximum operating speed depends on material type, pressure, temperature and gap value.
Temperature range also dependent on medium.

Materials

Standard Material:

- For hydraulic components in mineral oils or medium with good lubricating performance, polyurethane 93 Shore A

Zurcon® Z20

Colour: turquoise

■ Installation Recommendation

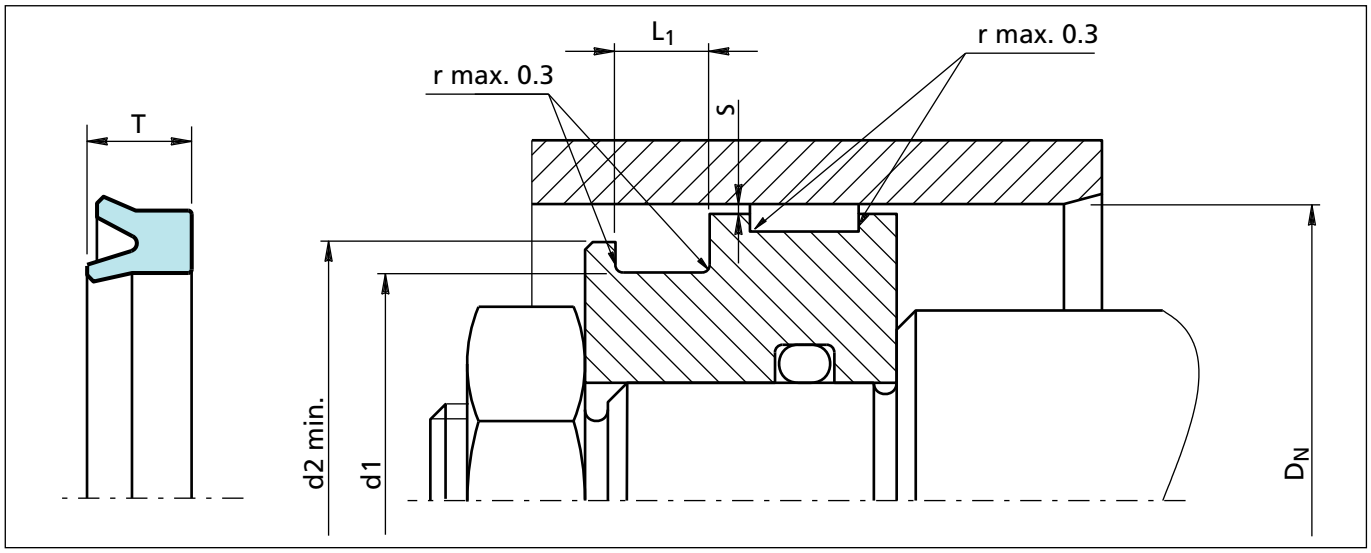

Figure 42 Installation drawing
* Dimensions "S" see Table XLVI

Ordering Example

Bore diameter:	D_N	= 80 mm
Groove diameter:	d1	= 60 mm
Groove width:	L1	= 13 mm
TSS Part No.:	PUA000800 (Table XLVII)	
Material code:	Z20	

TSS Article No. PUA 0 00800 - Z20

- TSS Series No.
- Execution code
- Bore diameter x 10
- Quality Index (standard)
- Material code

Table XLVII Installation dimensions / TSS Part No.

Bore Dia.	Groove Dia.	Seal Width	Groove Width	Fitting Dia.	TSS Part No.
D_N H9	d_1 h9	T	L1 +0.2	d_2 min	
14.0	8.0	6.3	6.8	11.0	PUA000140
16.0	8.0	6.0	5.5	13.0	PUA300160
20.0	12.0	6.5	7.5	15.0	PUA000200
22.0	12.0	8.0	9.0	16.0	PUA000220
25.0	15.0	8.0	9.0	19.0	PUA000250
30.0	20.0	8.0	9.0	24.0	PUA100300
30.0	22.0	6.5	7.0	26.0	PUA400300
32.0	22.0	8.0	9.0	26.0	PUA000320
32.0	26.0	5.0	6.0	28.0	PUA200320
35.0	25.0	8.0	9.0	29.0	PUA100350
40.0	30.0	6.5	7.5	34.0	PUA200400
40.0	30.0	10.0	11.0	34.0	PUA500400

Bore Dia.	Groove Dia.	Seal Width	Groove Width	Fitting Dia.	TSS Part No.
D_N H9	d_1 h9	T	L1 +0.2	d_2 min	
40.0	32.0	5.5	6.5	36.0	PUA300400
45.0	30.0	10.0	11.0	35.0	PUA100450
50.0	40.0	10.0	11.0	44.0	PUA400500
50.0	42.0	5.5	6.0	45.0	PUA900500
52.0	42.0	5.7	6.5	46.0	PUA000520
55.0	40.0	10.0	11.0	45.0	PUA000550
60.0	50.0	7.0	8.0	54.0	PUA000600
60.0	50.0	10.0	11.0	54.0	PUA600600
63.0	48.0	12.0	13.0	53.0	PUA000630
63.0	53.0	7.0	8.0	57.0	PUA200630
65.0	50.0	10.0	11.0	55.0	PUA100650
65.0	55.0	10.0	11.0	59.0	PUA400650
70.0	60.0	7.0	8.0	64.0	PUA100700
70.0	60.0	12.0	13.0	64.0	PUA700700
75.0	65.0	7.0	8.0	69.0	PUA500750
75.0	65.0	10.0	11.0	69.0	PUA400750
80.0	60.0	12.0	13.0	65.0	PUA000800
80.0	68.0	8.5	9.5	72.0	PUA300800
80.0	70.0	12.0	13.0	74.0	PUA700800
85.0	70.0	12.0	13.0	75.0	PUA300850
90.0	75.0	12.0	13.0	80.0	PUA300900
90.0	80.0	10.0	11.0	84.0	PUA000900
95.0	75.0	13.5	14.5	80.0	PUA100950
100.0	80.0	12.0	13.0	85.0	PUA001000
100.0	85.0	12.0	13.0	90.0	PUA401000
110.0	95.0	12.0	13.0	100.0	PUA101100
110.0	100.0	7.0	8.0	104.0	PUA201100
115.0	100.0	12.0	13.0	105.0	PUA001150
120.0	100.0	12.0	13.0	105.0	PUA001200
125.0	100.0	15.0	16.0	105.0	PUA201250
125.0	105.0	12.0	13.0	110.0	PUA301250
125.0	110.0	10.0	11.0	115.0	PUA101250
130.0	110.0	15.0	16.0	115.0	PUA001300
140.0	120.0	12.0	13.0	125.0	PUA001400
150.0	130.0	15.0	16.0	135.0	PUA101500
160.0	140.0	11.5	12.5	145.0	PUA001600
180.0	160.0	11.5	12.5	165.0	PUA201800
200.0	175.0	15.0	16.0	180.0	PUA102000
250.0	225.0	15.0	16.0	230.0	PUA102500

Zurcon® Wynseal

Double Acting

Rubber Energized Plastic Faced Seal

High Static and Dynamic Sealing Effect

Material:
Zurcon® + NBR

■ Zurcon® Wynseal

Description
The Zurcon® Wynseal is a double-acting seal consisting of a special polyurethane seal ring and an O-Ring as energizing element (Figure 43).

The particular characteristic of the seal is the special design of the seal edge profile. Two external seal edges act as primary seal for pressures from both sides and prevent any build-up of hydrodynamic pressure over the seal profile and the risk of the blow-by effect. The central back-up and sealing bulge increases the sealing effect*. Grooves are provided on both sides on the plane surfaces to provide activation of the energizing O-Ring. These ensure direct pressure loading of the seal under all operating conditions.

Since the installation groove is identical to that for the Turcon® Glyd Ring®, the seal is ideal for the standardisation of cylinder construction if, efficient and low cost seal elements are demanded in large quantities and, the cylinder can be adapted to meet different operating conditions. It has to be taken into consideration that in this case the gap dimension has to be checked!

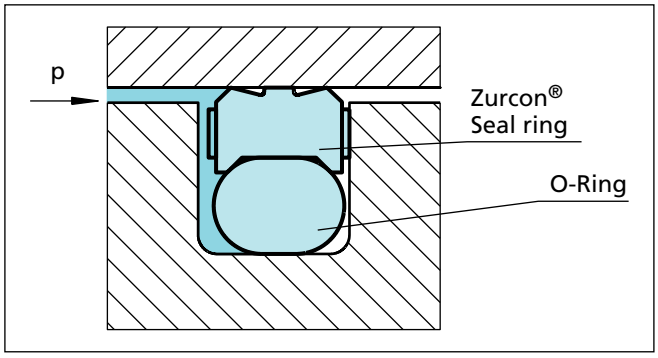

Figure 43 Zurcon® Wynseal

Advantages

- High static and dynamic sealing effect
- High abrasion resistance
- Simple groove design, one-piece piston possible
- Suitable for grooves to ISO 7425, Part 1.

* Only from PW42 and the following Series No.; PW40 and PW41 without sealing and supporting bulge.

Application Examples

The Zurcon® Wynseal is the recommended

element for double acting pistons of hydraulic components in various sectors such as:

- Machine tools
- Forklifts & handling machinery
- Agriculture
- Industrial hydraulic light to medium duty

Technical Data

Pressure:	Up to 25 MPa	(Z20N)
	Up to 40 MPa	(Z23N)
Speed:	Up to 0.5 m/s	
Temperature:	-35 °C to +110 °C	
Media:	Mineral oil-based hydraulic fluids	

Important Note:
The above data are maximum values and cannot be used at the same time. e.g. the maximum operating speed depends on material type, pressure, temperature and gap value.
Temperature range also dependent on medium.

Materials

Wynseal:	Zurcon® Z20, 93 Shore A (on request 96 Shore A:reference Z23)
O-Ring:	NBR 70 Shore A
Set reference:	Z20N (Z23N)

■ Installation Recommendation

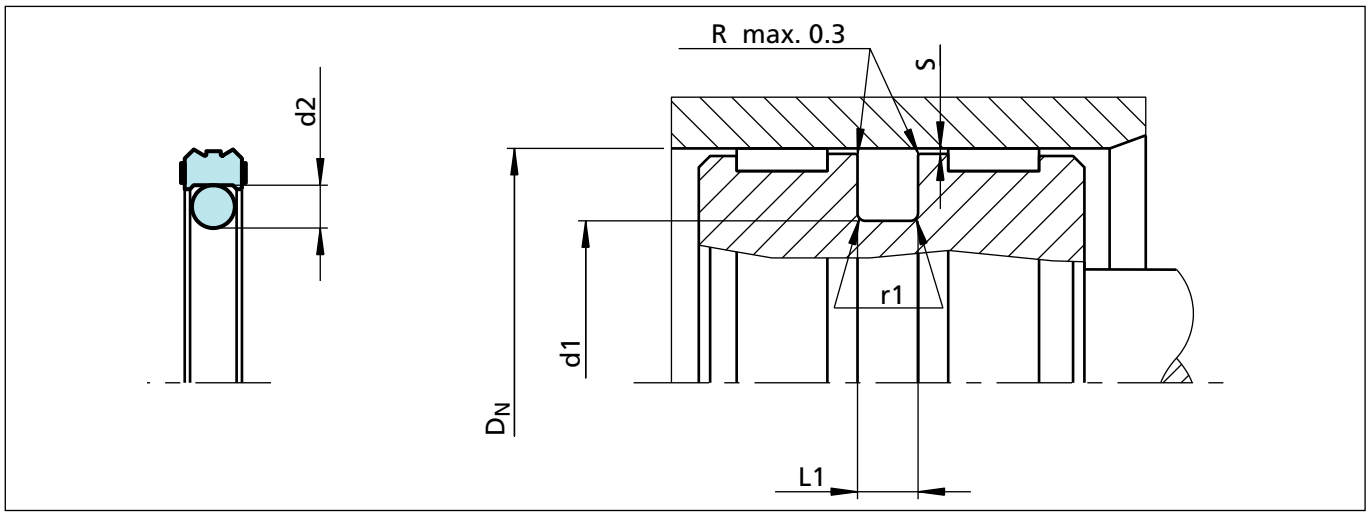

Figure 44 Installation drawing

Table XLVIII Installation dimensions

Series No.	Groove Diameter	Groove Width	Radius	Radial Clearance	O-Ring Cross Section
	d1 h9	**L1** +0.2	**r1**	**S max**	**d2**
PW40	DN - 4,9	2.2	0.4	0.20	1.78
PW41	DN - 7.5	3.2	0.6	0.25	2.62
PW42	DN - 11.0	4.2	1.0	0.25	3.53
PW43	DN - 15.5	6.3	1.3	0.30	5.33
PW44	DN - 21.0	8.1	1.8	0.30	7.00

Ordering example

Wynseal for ISO groove
Bore diameter: D_N = 63 mm
Series No. PW43
TSS Part No. PW4300630 (from Table XLIX)
Material Z20
material code: Z20
O-Ring material code: N
Set code: Z20N

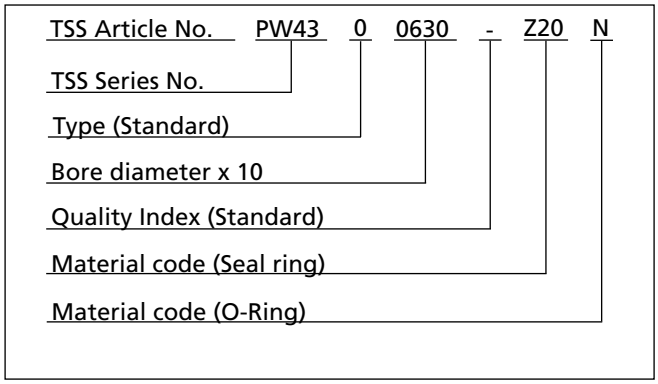

Material Z23
material code: Z23
O-Ring material code: N
Set code: Z23N

TSS Article No. PW43 0 0630 - Z23 N

- TSS Series No.
- Type (Standard)
- Bore diameter x 10
- Quality Index (Standard)
- Material code (Seal ring)
- Material code (O-Ring)

Table XLIX Installation dimensions / TSS Part No.

Bore Diameter	Groove Diameter	Groove Width	TSS Part No.
D_N H9	d_1 h9	L1 +0.2	
12.0	7.1	2.2	PW4000120
12.0	4.5	3.2	PW4100120
16.0	**8.5**	**3.2**	**PW4100160**
20.0	**12.5**	**3.2**	**PW4100200**
22.0	14.5	3.2	PW4100220
24.0	16.5	3.2	PW4100240
25.0	**17.5**	**3.2**	**PW4100250**
25.0	**14.0**	**4.2**	**PW4200250**
30.0	22.5	3.2	PW4100300
32.0	**24.5**	**3.2**	**PW4100320**
32.0	**21.0**	**4.2**	**PW4200320**
35.0	27.5	3.2	PW4100350
35.0	24.0	4.2	PW4200350
36.0	28.5	3.2	PW4100360
38.0	30.5	3.2	PW4100380
40.0	**32.5**	**3.2**	**PW4100400**
40.0	**29.0**	**4.2**	**PW4200400**
42.0	31.0	4.2	PW4200420
45.0	34.0	4.2	PW4200450
45.0	29.5	6.3	PW4300450
49.0	38.0	4.2	PW4200490
50.0	**39.0**	**4.2**	**PW4200500**
50.0	34.5	6.3	PW4300500
52.0	36.5	6.3	PW4300520
55.0	44.0	4.2	PW4200550
55.0	39.5	6.3	PW4300550
56.0	45.0	4.2	PW4200560

The sizes printed in **bold** type are suitable for grooves to ISO 7425/1. Additional dimensions can be delivered on request.

Bore Diameter	Groove Diameter	Groove Width	TSS Part No.
D_N H9	d_1 h9	L1 +0.2	
57.0	46.0	4.2	PW4200570
60.0	49.0	4.2	PW4200600
60.0	44.5	6.3	PW4300600
63.0	**52.0**	**4.2**	**PW4200630**
63.0	**47.5**	**6.3**	**PW4300630**
65.0	54.0	4.2	PW4200650
65.0	49.5	6.3	PW4300650
70.0	59.0	4.2	PW4200700
70.0	54.5	6.3	PW4300700
75.0	64.0	4.2	PW4200750
75.0	59.5	6.3	PW4300750
80.0	**69.0**	**4.2**	**PW4200800**
80.0	**64.5**	**6.3**	**PW4300800**
85.0	69.5	6.3	PW4300850
90.0	74.5	6.3	PW4300900
95.0	79.5	6.3	PW4300950
100.0	**84.5**	**6.3**	**PW4301000**
105.0	89.5	6.3	PW4301050
110.0	94.5	6.3	PW4301100
115.0	99.5	6.3	PW4301150
120.0	104.5	6.3	PW4301200
125.0	**109.5**	**6.3**	**PW4301250**
125.0	**104.0**	**8.1**	**PW4401250**
130.0	114.5	6.3	PW4301300
135.0	114.0	8.1	PW4401350
140.0	119.0	8.1	PW4401400
150.0	129.0	8.1	PW4401500
160.0	**139.0**	**8.1**	**PW4401600**
170.0	149.0	8.1	PW4401700
180.0	159.0	8.1	PW4401800
190.0	169.0	8.1	PW4401900
200.0	**179.0**	**8.1**	**PW4402000**
210.0	189.0	8.1	PW4402100
220.0	199.0	8.1	PW4402200
230.0	209.0	8.1	PW4402300
240.0	219.0	8.1	PW4402400
250.0	**229.0**	**8.1**	**PW4402500**
300.0	279.0	8.1	PW4403000

The sizes printed in **bold** type are suitable for grooves to ISO 7425/1. Additional dimensions can be delivered on request.

Zurcon® Wynseal M

Double Acting

Rubber Energized Plastic Faced Seal

Material:
Turcon®, Zurcon® and Elastomer

■ Zurcon® Wynseal M

Description

The Wynseal is available in a slightly modified machined version, the Zurcon® Wynseal M, in Zurcon® and Turcon® materials.

The Zurcon® Wynseal M is a double-acting seal consisting of a Zurcon® or Turcon® seal ring and an O-Ring as energizing element – see Figure 45.

The seal is designed with a seal edge profile. Two external seal edges act as primary seal for pressures from both sides and prevent any build-up of hydrodynamic pressure over the seal profile and the risk of the blow-by effect. The central sealing and supporting bulge increases the sealing effect *. Notches are provided on both sides on the plane surfaces to provide activation of the energizing O-Ring. These ensure direct pressure loading of the seal under all operating conditions.

Installation groove is identical to that for the Turcon® Glyd Ring®.

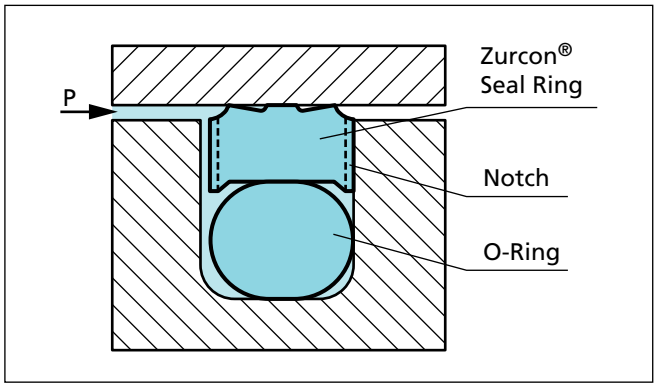

Figure 45 Zurcon® Wynseal M

* Only from PW62 and the following Series No.; PW60 is without seal edge profile and PW61 is without supporting bulge.

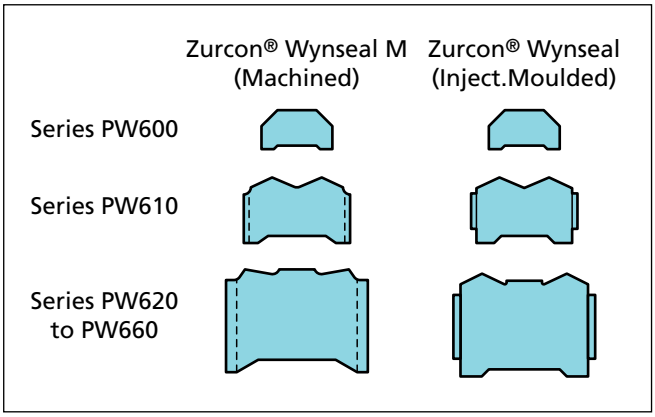

Figure 46 Zurcon® Wynseal M and Zurcon® Wynseal profiles

Advantages

- High static and dynamic sealing effect
- High abrasion resistance (Zurcon® materials)
- Simple groove design, one-piece piston possible
- Diameter range - from 8 to 2700 mm
- Grooves according to ISO 7425/1
- For lower friction
- Higher temperature
- Higher pressure
- Better chemical resistance

Application Examples

The Zurcon® Wynseal M is the recommended element for double acting pistons of hydraulic components in various sectors such as:

- Machine tools
- Forklifts & handling machinery
- Agriculture
- Industrial hydraulic light to medium duty

Technical Data

Operating conditions:

Pressure:	Up to 50 MPa
Speed:	Up to 10 m/s
Temperature:	-45 °C to +200 °C * (depending on seal and O-Ring material)
Media:	Mineral oil-based hydraulic fluids, flame retardant hydraulic fluids, environmentally safe hydraulic fluids (bio-oils), phosphate ester, water and others, depending on the seal and O-Ring material compatibility - see Table L.
Clearance:	The maximum permissible radial clearance S_{max} is shown in Table LI, as a function of the operating pressure and functional diameter.

Important Note:
The above data are maximum values and cannot be used at the same time. e.g. the maximum operating speed depends on material type, pressure, temperature and gap value. Temperature range also dependent on medium.

*) in the case of unpressurized applications in temperatures below 0°C please contact our application engineers for assistance!

Installation

Zurcon® Wynseal® M is installed according to “Installation of Piston Seal” at page 10 to 12.

Materials

The following material combinations have proven effective for hydraulic applications:

For light to medium applications with reciprocating movements in mineral oils and other media with good lubrication:

Turcon® Wynseal M:	Zurcon® Z52
O-Ring:	NBR, 70 Shore A N
Set code:	Z52N

All round material for hydraulic applications with reciprocating, short stroke or helical movements in mineral oils, flame retardant hydraulic fluids HFC, phosphate ester, bio-oils or fluids having less satisfactory lubricating properties:

Turcon® Wynseal M:	Turcon® M12
O-Ring:	NBR, 70 Shore A N FKM, 70 Shore A V
Set code:	M12N or M12V

For specific applications, all Turcon® materials are available.

Other viable material combinations are listed in Table L.

Table L Turcon® and Zurcon® Materials for Zurcon® Wynseal M

Material, Applications, Properties	Code	O–Ring Material Shore A	Code	O-Ring Operating Temp.* °C	Mating Surface Material	MPa max. Dyna-mic
Turcon® M12 **First material choice** for seals in linear motion Overall improved properties For new constructions and updating For all commonly applied hydraulic fluids including fluids with low lubrication performance Lowest friction and best sliding properties Lowest wear on seals Improved absorption of abrasive contaminants No wear or abrasion of counter surface Mineral fibre and Additives filled Colour: Dark grey	M12	NBR - 70	N	-30 to +100	Steel Steel hardened Steel chrome plated (rod) Steel plated (rod) Cast iron Stainless steel Titanium	35
		NBR - 70 Low temp.	T	-45 to +80		
		FKM - 70	V	-10 to +200		
Turcon® T08 For lubricating fluids and linear motion **Very high compressive strength and extrusion resistance** Hard counter surfaces is recommended Bronze filled Colour: Light to dark brown, which may have variations in shading	T08	NBR - 70	N	-30 to +100	Steel hardened Steel chrome plated (rod) Cast iron	50
		NBR - 70 Low temp.	T	-45 to +80		
		FKM - 70	V	-10 to +200		
Turcon® T40 For lubricating and non-lubricating fluids High frequency and short strokes **Water hydraulics** Surface texture is not suitable for gas sealing Carbon fibre filled Colour: Grey	T40	NBR - 70	N	-30 to +100	Steel Steel hardened Steel chrome plated (rod) Cast iron Stainless steel Aluminium	25
		NBR - 70 Low temp.	T	-45 to +80		
		FKM - 70	V	-10 to +200		
		EPDM - 70	E**	-45 to +145		
Turcon® T46 For lubricated hydraulics in linear motion High compressive strength High extrusion resistance Very good sliding and wear properties BAM tested Bronze filled Colour: Light to dark brown, which may have variations in shading	T46	NBR - 70	N	-30 to +100	Steel hardened Steel chrome plated (rod) Cast iron	35
		NBR - 70 Low temp.	T	-45 to +80		
		FKM - 70	V	-10 to +200		
Zurcon® Z51*** For mineral oil based fluids **Very high abrasion and extrusion resistance** For counter surface with rougher surface finish Limited chemical resistance Max. working temperature 110 °C Cast polyurethane Colour: Yellow to light-brown	Z51	NBR - 70	N	-30 to +100	Steel Steel hardened Steel chrome plated (rod) Cast iron Stainless steel Ceramic coating	45
		NBR - 70 Low temp.	T	-45 to +80		

* The O-Ring Operation Temperature is only valid in mineral hydraulic oil (except EPDM)
** Material not suitable for mineral oils. *** Max. ø 2300 mm BAM: Tested by "Bundesanstalt Materialprüfung, Germany".
Highlighted materials are standard.

Zurcon® Wynseal M

Material, Applications, Properties	Code	O–Ring Material Shore A	Code	O-Ring Operating Temp.* °C	Mating Surface Material	MPa max. Dyna-mic
Zurcon® Z52* **** For mineral oil based fluids High abrasion resistance For counter surface with rougher surface finish Good extrusion resistance Limited chemical resistance Max. working temperature 110 °C Cast polyurethane Colour: Turquoise	Z52	NBR - 70	N	-30 to +100	Steel Steel hardened Steel chrome plated (rod) Cast iron Stainless steel Ceramic coating	25
		NBR -70 Low temp.	T	-45 to +80		
Zurcon® Z80 For lubricating and non-lubricating fluids Water based fluids, air and gases Dry air pneumatics High abrasion and extrusion resistance For service in abrasive conditions and media with particles Good chemical resistance Limited temperature capability (-60 to +80 °C) UHMWPE (Ultra High Molecular Weight Polyethylene) Colour: White to off-white	Z80	NBR - 70	N	-30 to (+100)	Steel Steel hardened Steel chrome plated (rod) Stainless steel Aluminium Bronze Ceramic coating	30
		NBR - 70 Low temp.	T	-45 to +80		
		EPDM - 70	E**	-45 to(+145)		

* The O-Ring Operation Temperature is only valid in mineral hydraulic oil (except EPDM)
** Material not suitable for mineral oils. *** Max. ø 2300 mm BAM: Tested by "Bundesanstalt Materialprüfung, Germany".
Highlighted materials are standard.

■ Installation Recommendation

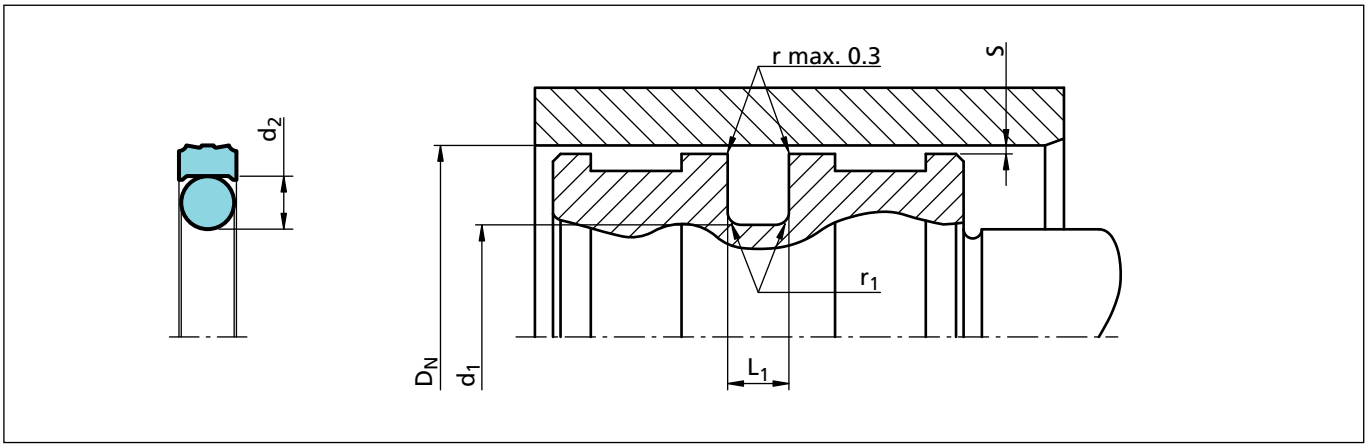

Figure 47 Installation drawing

Table LI Installation dimensions – Standard recommendations

Series No.	Recommended diameter range D_N H9	Available range D_N H9	Groove Diameter d_1 h9	Groove width L_1 +0.2/-0	Radius	Radial Clearance S max.*			O-Ring Cross-Section
					r_1	10 MPa	20 MPa	40 MPa	d_2
PW600	8 - 14.9	8 - 140.0	D_N - 4.9	2.20	0.4	0.40	0.30	0.20	1.78
PW610	15 - 39.9	12 - 140.0	D_N - 7.5	3.20	0.6	0.60	0.50	0.30	2.62
PW620	40 - 79.9	15 - 320.0	D_N - 11.0	4.20	1.0	0.70	0.50	0.30	3.53
PW630	80 - 132.9	40 - 400.0	D_N - 15.5	6.30	1.3	0.80	0.60	0.40	5.33
PW640	133 - 329.9	80 - 700.0	D_N - 21.0	8.10	1.8	0.80	0.60	0.40	7.00
PW680	330 - 669.9	133 - 999.9	D_N - 24.5	8.10	1.8	0.90	0.35	0.50	7.00
PW650	670 - 999.9	330 - 999.9	D_N - 28.0	9.50	2.5	1.00	0.80	0.60	8.40
PW65X	1000 - 1200	-	D_N - 28.0	9.50	2.5	1.00	0.80	0.60	8.40
PW660**	-	670 - 999.9	D_N - 38.0	13.80	3.0	1.20	0.90	0.70	12.00
PW66X**	1000 - 2700***	-	D_N - 38.0	13.80	3.0	1.20	0.90	0.70	12.00

* At pressure > 40 MPa use diameter tolerance H8/f8 (bore/rod) in area of the seal or consult TSS for alternative materials or profiles. TSS Slydring® / Wear Rings are not applicable at very small radical clearance S. Please consult the Slydring® catalog.
** O-Rings with 12 mm cross section are delivered as special profilring. *** Z51 and Z52 max ø 2300 mm.

Ordering example

Zurcon® Wynseal M complete with O-Ring, standard application;

Series: PW630 (from Table LI).
Bore diameter: D_N = 80.0 mm.
TSS Part No.: PW6300800 (from Table LII).

Select the material from Table L.
The corresponding code numbers are appended to the TSS Part No. Together these form the TSS Article Number.

The TSS Article Number for all intermediate sizes not shown in Table LII can be determined following the example.

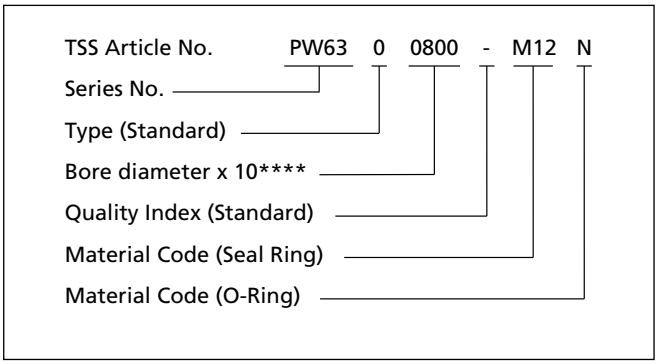

**** For diameters ≥ 1000.0 mm multiply only by factor 1.
Example: PW66X for diameter 1200.0 mm.
TSS Article No.: PW66X1200 - M12N.

Table LII Installation dimensions / TSS Part No.

Bore Dia. D_N H9	Groove Dia. d_1 h9	Groove Width L_1 +0.2	TSS Part No.	O-Ring Dimensions
8.0	3.1	2.2	PW6000080	2.90 x 1.78
10.0	5.1	2.2	PW6000100	4.80 x 1.80
12.0	7.1	2.2	PW6000120	6.70 x 1.80
14.0	9.1	2.2	PW6000140	8.75 x 1.80
15.0	7.5	3.2	PW6100150	7.59 x 2.62
16.0	**11.1**	**2.2**	**PW6000160**	**10.82 x 1.78**
16.0	**8.5**	**3.2**	**PW6100160**	**7.59 x 2.62**
18.0	13.1	2.2	PW6000180	12.42 x 1.78
18.0	10.5	3.2	PW6100180	9.19 x 2.62
20.0	**15.1**	**2.2**	**PW6000200**	**14.00 x 1.78**
20.0	**12.5**	**3.2**	**PW6100200**	**12.37 x 2.62**
22.0	17.1	2.2	PW6000220	17.17 x 1.78
22.0	14.5	3.2	PW6100220	13.94 x 2.62
24.0	16.5	3.2	PW6100240	15.54 x 2.62
25.0	**20.1**	**2.2**	**PW6000250**	**18.77 x 1.78**
25.0	**17.5**	**3.2**	**PW6100250**	**17.12 x 2.62**
25.0	14.0	4.2	PW6200250	13.87 x 3.53
28.0	20.5	3.2	PW6100280	20.29 x 2.62
30.0	22.5	3.2	PW6100300	21.89 x 2.62
32.0	27.1	2.2	PW6000320	26.70 x 1.78
32.0	**24.5**	**3.2**	**PW6100320**	**23.47 x 2.62**
32.0	**21.0**	**4.2**	**PW6200320**	**20.22 x 3.53**
35.0	27.5	3.2	PW6100350	26.64 x 2.62
35.0	24.0	4.2	PW6200350	23.40 x 3.53
36.0	28.5	3.2	PW6100360	28.24 x 2.62
38.0	30.5	3.2	PW6100380	29.82 x 2.62
40.0	**32.5**	**3.2**	**PW6100400**	**31.42 x 2.62**
40.0	**29.0**	**4.2**	**PW6200400**	**28.17 x 3.53**
42.0	31.0	4.2	PW6200420	29.75 x 3.53
45.0	34.0	4.2	PW6200450	32.92 x 3.53
48.0	37.0	4.2	PW6200480	36.09 x 3.53
50.0	42.5	3.2	PW6100500	40.94 x 2.62
50.0	**39.0**	**4.2**	**PW6200500**	**37.70 x 3.53**
50.0	**34.5**	**6.3**	**PW6300500**	**32.69 x 5.33**
52.0	41.0	4.2	PW6200520	40.87 x 3.53
55.0	44.0	4.2	PW6200550	44.04 x 3.53

Bore Dia. D_N H9	Groove Dia. d_1 h9	Groove Width L_1 +0.2	TSS Part No.	O-Ring Dimensions
56.0	**45.0**	**4.2**	**PW6200560**	**44.04 x 3.53**
60.0	49.0	4.2	PW6200600	47.22 x 3.53
63.0	**52.0**	**4.2**	**PW6200630**	**50.39 x 3.53**
63.0	**47.5**	**6.3**	**PW6300630**	**46.99 x 5.33**
65.0	54.0	4.2	PW6200650	53.57 x 3.53
70.0	59.0	4.2	PW6200700	56.74 x 3.53
70.0	54.5	6.3	PW6300700	53.34 x 5.33
75.0	64.0	4.2	PW6200750	63.09 x 3.53
75.0	59.5	6.3	PW6300750	56.52 x 3.53
80.0	**69.0**	**4.2**	**PW6200800**	**66.27 x 3.53**
80.0	**64.5**	**6.3**	**PW6300800**	**62.87 x 5.33**
80.0	59.0	8.1	PW6400800	58 x 7.00
85.0	69.5	6.3	PW6300850	69.22 x 5.33
85.0	64.0	8.1	PW6400850	63 x 7.00
90.0	79.0	4.2	PW6200900	78.97 x 3.53
90.0	74.5	6.3	PW6300900	72.39 x 5.33
90.0	69.0	8.1	PW6400900	68 x 7.00
95.0	84.0	4.2	PW6200950	82.14 x 3.53
95.0	79.5	6.3	PW6300950	78.74 x 5.33
95.0	74.0	8.1	PW6400950	73 x 7.00
100.0	89.0	4.2	PW6201000	88.49 x 3.53
100.0	**84.5**	**6.3**	**PW6301000**	**81.92 x 5.33**
100.0	79.0	8.1	PW6401000	78 x 7.00
105.0	94.0	4.2	PW6201050	91.67 x 3.53
105.0	89.5	6.3	PW6301050	88.27 x 5.33
110.0	99.0	4.2	PW6201100	98.02 x 3.53
110.0	94.5	6.3	PW6301100	91.44 x 5.33
110.0	89.0	8.1	PW6401100	88 x 7.00
115.0	99.5	6.3	PW6301150	97.79 x 5.33
120.0	109.0	4.2	PW6201200	107.54 x 3.53
120.0	104.5	6.3	PW6301200	100.97 x 5.33
120.0	99.0	8.1	PW6401200	98 x 7.00
125.0	114.0	4.2	PW6201250	113.89 x 3.53
125.0	**109.5**	**6.3**	**PW6301250**	**107.32 x 5.33**
125.0	**104.0**	**8.1**	**PW6401250**	**103 x 7.00**
130.0	114.5	6.3	PW6301300	113.67 x 5.33

Bore Dia.	Groove Dia.	Groove Width	TSS Part No.	O-Ring Dimensions
D_N H9	d_1 h9	L_1 +0.2		
130.0	109.0	8.1	PW6401300	108 x 7.00
135.0	114.0	8.1	PW6401350	113.67 x 7.00
140.0	124.5	6.3	PW6301400	123.19 x 5.33
140.0	119.0	8.1	PW6401400	116.84 x 7.00
150.0	134.5	6.3	PW6301500	132.72 x 5.33
150.0	129.0	8.1	PW6401500	126.37 x 7.00
160.0	**144.5**	**6.3**	**PW6301600**	**142.24 x 5.33**
160.0	**139.0**	**8.1**	**PW6401600**	**135.89 x 7.00**
170.0	149.0	8.1	PW6401700	145.42 x 7.00
180.0	164.5	6.3	PW6301800	164.47 x 5.33
180.0	159.0	8.1	PW6401800	158.12 x 7.00
190.0	169.0	8.1	PW6401900	164.47 x 7.00
200.0	**184.5**	**6.3**	**PW6302000**	**183.52 x 5.33**
200.0	**179.0**	**8.1**	**PW6402000**	**177.17 x 7.00**
210.0	189.0	8.1	PW6402100	183.52 x 7.00
220.0	199.0	8.1	PW6402200	196.22 x 7.00
230.0	214.5	6.3	PW6302300	208.92 x 5.33
230.0	209.0	8.1	PW6402300	208.92 x 7.00
240.0	219.0	8.1	PW6402400	215.27 x 7.00
250.0	229.0	8.1	PW6402500	227.97 x 7.00
250.0	**225.5**	**8.1**	**PW6802500**	**215.27 x 7.00**
250.0	**134.5**	**6.3**	**PW6302500**	**234.32 x 5.33**
260.0	239.0	8.1	PW6402600	240.67 x 7.00
270.0	249.0	8.1	PW6402700	240.67 x 7.00
280.0	259.0	8.1	PW6402800	253.37 x 7.00
290.0	269.0	8.1	PW6402900	266.07 x 7.00
300.0	279.0	8.1	PW6403000	278.77 x 7.00
300.0	275.5	8.1	PW6803000	266.07 x 7.00
320.0	**299.0**	**8.1**	**PW6403200**	**291.47 x 7.00**
320.0	**295.5**	**8.1**	**PW6803200**	**291.47 x 7.00**
350.0	325.5	8.1	PW6803500	316.87 x 7.00
360.0	335.5	8.1	PW6803600	329.57 x 7.00
380.0	355.5	8.1	PW6803800	354.97 x 7.00
400.0	**375.5**	**8.1**	**PW6804000**	**367.67 x 7.00**
450.0	425.5	8.1	PW6804500	417.96 x 7.00
500.0	**475.5**	**8.1**	**PW6805000**	**468.76 x 7.00**

Bore Dia.	Groove Dia.	Groove Width	TSS Part No.	O-Ring Dimensions
D_N H9	d_1 h9	L_1 +0.2		
600.0	575.5	8.1	PW6806000	557.66 x 7.00
700.0	672.0	9.5	PW6507000	670 x 8.40
780.0	752.0	9.5	PW6507800	750 x 8.40
800.0	772.0	9.5	PW6508000	770 x 8.40
900.0	872.0	9.5	PW6509000	870 x 8.40
1000.0	972.0	9.5	PW65X1000	970 x 8.40
1000.0	962.0	13.8	PW66X1000	960 x 12.00
1200.0	1172.0	9.5	PW65X1200	1170 x 8.40
1200.0	1162.0	13.8	PW66X1200	1160 x 12.00
1500.0	1462.0	13.8	PW66X1500	1460 x 12.00
2000.0	1962.0	13.8	PW66X2000	1960 x 12.00
2700.0	2662.0	13.8	PW66X2700	2660 x 12.00

The bore diameters in **bold** type comply with the recommendations of ISO 3320.

Other dimensions and all intermediate sizes up to 2700 mm diameter including imperial (inch) sizes can be supplied.

All O-Rings with 12 mm cross section are delivered as special profilring.

POLYPAC® - PHD/P

Double Acting

Heavy Duty, High Pressure

Excellent Leakage Control

Material:
Zurcon®, NBR Elastomer + POM

■ PHD/P Seal

Description

The PHD/P Seal is a high-pressure heavy-duty piston seal with excellent leakage control and superior extrusion and wear resistance

The PHD/P seal is a combination of a Zurcon® polyurethane slipper seal energised by an elastomer profile ring and completed with two Back-up rings (POM). It is manufactured with a predefined interference fit, which together with the squeeze of the elastomer part ensures a good sealing effect even at low system pressure. At higher pressures the elastomer part is energised by the system pressure and consequently activates the slipper seal in the radial direction.

The Back-up rings prevent the slipper seal from extrusion and ensure a long service life even under harsh conditions.

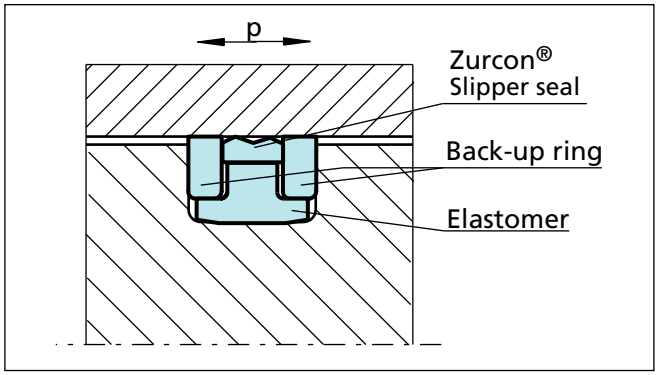

Figure 48 PHD/P Seal

Advantages

- Simple groove design
- Excellent sealing effect
- Excellent wear resistance
- Increased clearance possible
- Long service life

Application Examples

The PHD/P Seal is the recommended sealing element for double acting pistons of hydraulic cylinders working in very harsh conditions such as:

- Excavators
- Heavy duty cylinders

Technical Data

Operating conditions

Pressure:	Up to 40 MPa Peak pressure up to 60 MPa
Speed:	Up to 0.5 m/s
Temperature:	-35 °C to +110 °C
Media:	Mineral oil based hydraulic fluids
Clearance:	The maximum permissible radial clearance S_{max} is shown in Table LIII, as a function of the operating pressure and functional diameter.

Important Note:
The above data are maximum values and cannot be used at the same time. e.g. the maximum operating speed depends on material type, pressure, temperature and gap value.
Temperature range also dependent on medium.

Materials

Standard Application:

For hydraulic components in mineral oils or medium with good lubricating performance.

Slipper Seal:	Zurcon® Z20 93 Shore A
Energiser:	NBR 80 Shore A
Back-up rings:	POM
Material code for the set:	Z2053

■ Installation Recommendation

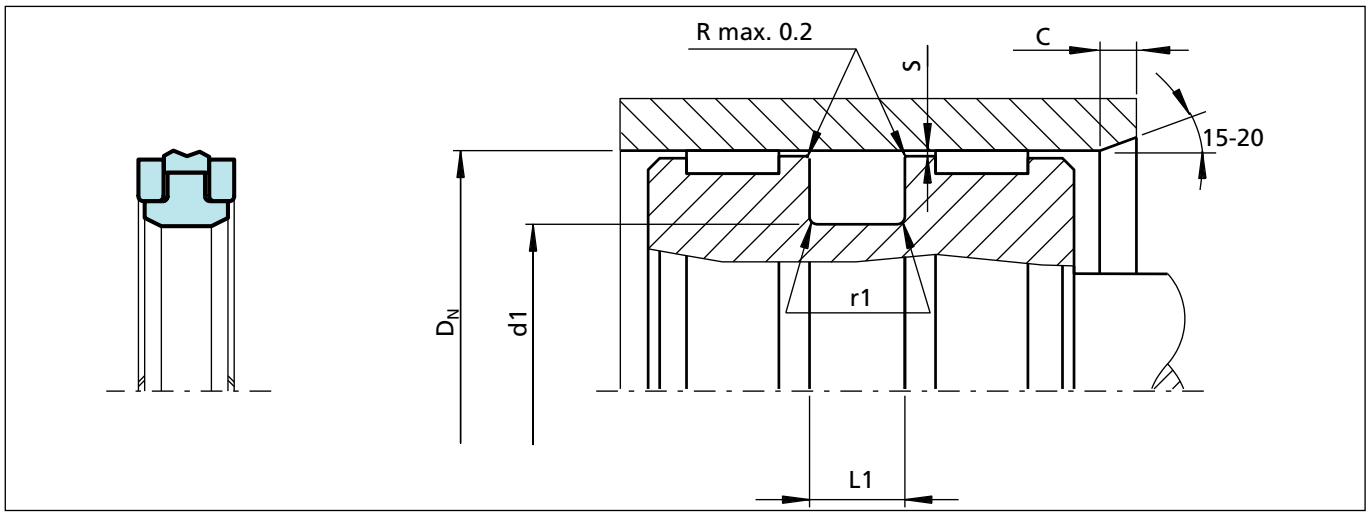

Figure 49 Installation drawing

Ordering Example

PHD/P Seal, complete.
Bore diameter: D_N = 80.0 mm
TSS Part No. PKP0P0800 (from Table LIII)
Material set-code: Z2053
Polypac Ref. No.: PHD 8065P

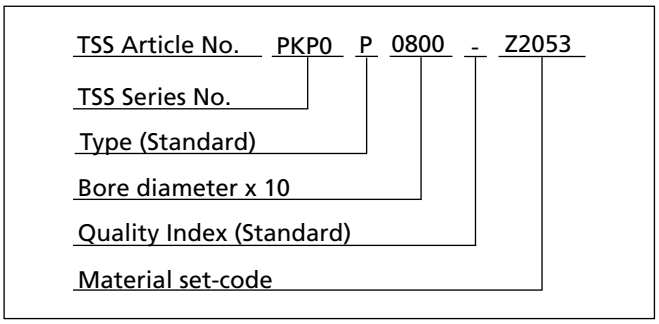

Table LIII Installation dimensions / TSS Part No.

Bore Dia.	Groove Dia.	Groove Width	Inlet Chamfer	Radius	TSS Article No.	Polypac Ref. No.
D_N H9	**d1** h9	**L1** +0.2	**C**	**r1**		
50.0	36.0	9.0	5.0	0.3	PKP0P0500-Z2053	PHD 5036P-Z20
55.0	41.0	9.0	5.0	0.3	PKP0P0550-Z2053	PHD 5541P-Z20
60.0	46.0	9.0	5.0	0.3	PKP0P0600-Z2053	PHD 6046P-Z20
63.0	48.0	11.0	5.0	0.5	PKP0P0630-Z2053	PHD 6348P-Z20
65.0	50.0	11.0	5.0	0.5	PKP0P0650-Z2053	PHD 6550P-Z20
70.0	55.0	11.0	5.0	0.5	PKP0P0700-Z2053	PHD 7055P-Z20
75.0	60.0	11.0	5.0	0.5	PKP0P0750-Z2053	PHD 7560P-Z20
80.0	65.0	11.0	5.0	0.5	PKP0P0800-Z2053	PHD 8065P-Z20
85.0	70.0	11.0	5.0	0.5	PKP0P0850-Z2053	PHD 8570P-Z20

Radial Clearance (S): For pressure up to 35 MPa 0.50 For pressure from 35 MPa up to 60 MPa 0.30

Bore Dia.	Groove Dia.	Groove Width	Inlet Chamfer	Radius	TSS Article No.	Polypac Ref. No.
D_N H9	**d1** h9	**L1** +0.2	**C**	**r1**		
90.0	75.0	11.0	5.0	0.5	PKP0P0900-Z2053	PHD 9075P-Z20
95.0	80.0	12.5	5.0	0.5	PKP0P0950-Z2053	PHD 9580P-Z20
100.0	85.0	12.5	5.0	0.5	PKP0P1000-Z2053	PHD 10085P-Z20
105.0	90.0	12.5	5.0	0.5	PKP0P1050-Z2053	PHD 10590P-Z20
110.0	95.0	12.5	5.0	0.5	PKP0P1100-Z2053	PHD 11095P-Z20
115.0	100.0	12.5	5.0	0.5	PKP0P1150-Z2053	PHD 115100P-Z20
120.0	105.0	12.5	5.0	0.5	PKP0P1200-Z2053	PHD 120105P-Z20
125.0	102.0	16.0	6.5	0.6	PKP0P1250-Z2053	PHD 125102P-Z20
130.0	107.0	16.0	6.5	0.6	PKP0P1300-Z2053	PHD 130107P-Z20
135.0	112.0	16.0	6.5	0.6	PKP0P1350-Z2053	PHD 135112P-Z20
140.0	117.0	16.0	6.5	0.6	PKP0P1400-Z2053	PHD 140117P-Z20
145.0	122.0	16.0	6.5	0.6	PKP0P1450-Z2053	PHD 145122P-Z20
150.0	127.0	16.0	6.5	0.6	PKP0P1500-Z2053	PHD 150127P-Z20
155.0	132.0	16.0	6.5	0.6	PKP0P1550-Z2053	PHD 155132P-Z20
160.0	137.0	16.0	6.5	0.6	PKP0P1600-Z2053	PHD 160137P-Z20
165.0	142.0	16.0	6.5	0.6	PKP0P1650-Z2053	PHD 165142P-Z20
170.0	147.0	16.0	6.5	0.6	PKP0P1700-Z2053	PHD 170147P-Z20
180.0	157.0	16.0	6.5	0.6	PKP0P1800-Z2053	PHD 180157P-Z20

Radial Clearance (S): For pressure up to 35 MPa 0.50 For pressure from 35 MPa up to 60 MPa 0.30

Compact Seal
POLYPAC® - DBM

Double Acting

Combined Seal and
Guide Element

Material:
NBR, Polyester Elastomer + POM

■ Compact Piston Seals

Description

The Compact Seal is a double-acting seal and guide element comprising an elastomeric profile seal ring, two back-up rings and two guide rings. The profile seal ring seals in both the static and dynamic range whilst the back-up rings prevent extrusion into the sealing gap. The function of the guide rings is to guide the piston in the cylinder tube and to absorb transverse forces. The design provides a compact seal and guide combination for a closed or split installation groove.

Designs

The Compact Seal is available in various profile geometries which are in practical use. The choice is normally determined by the existing installation grooves.

Polypac® DBM

The DBM Compact seal profile is characterized by a concave-shaped Back-up ring that prevents the elastomer profile ring from deformation and/or extrusion. The Back-up ring is centered on the outside by the guide ring.

Option

Polypac DBM is as option available without L-shape wear rings, but with Back-up Rings. If DBM/NEO is installed as piston sealing system, additional Slydring®/wear rings are required.

Polypac type: DBM/NEO
Consult TSS for available sizes

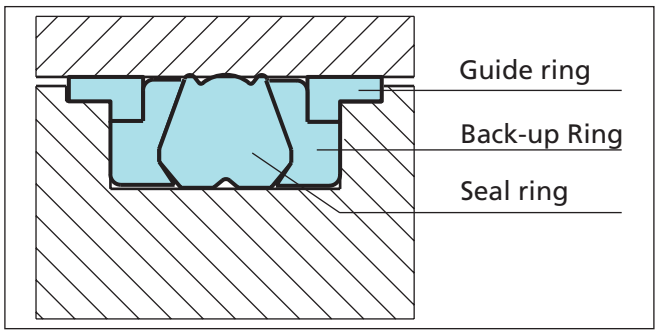

Figure 50 DBM Compact Seal

Advantages

- Good sealing effect, also suitable for holding cylinders
- Capable of installation in closed grooves for reduced machining costs
- Economic sealing and guiding solution
- Simple snap installation.

Application Examples

The Compact seals are the recommended sealing element for double acting pistons of hydraulic components such as:

- Machine tools
- Truck cranes
- Forklifts & handling machinery
- Agriculture equipment

Technical Data

Operating conditions

Pressure:	Up to 35 MPa peak up to 40 MPa
Speed:	Up to 0.5 m/s
Temperature:	-30 °C to +100 °C
Media:	Mineral oil-based hydraulic fluids, flame retardant hydraulic fluids, HFA, HFB, HFC (< +40 °C)

Important Note:
The above data are maximum values and cannot be used at the same time. e.g. the maximum operating speed depends on material type, pressure, temperature and gap value.
Temperature range also dependent on medium.

Materials

The DBM Compact Seal is available in the following material combination:

Profile seal:	NBR 80 Shore A
Back-up Ring:	Polyester elastomer
Guide rings:	POM
Set reference:	N8RO

■ Installation Recommendation Polypac® DBM

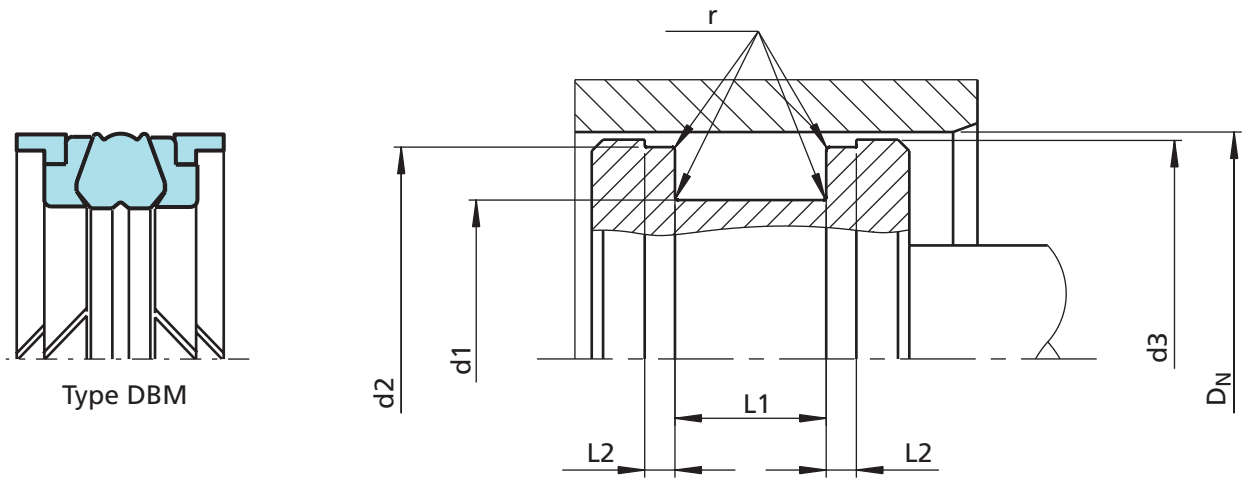

Figure 51 Installation drawing

Ordering Example

Bore diameter: D_N = 80.0 mm
Groove diameter: d1 = 60.0 mm
Groove width: L1 = 22.4 mm

TSS Article No. PCBO A 0800 - N8RO

TSS Series No.

Execution code

Bore diameter x 10

Quality Index (Standard)

Material set-code

Polypac Ref. No.: DBM 314236

Table LIV Installation dimensions / TSS Article No.

Bore Diameter	Groove Dimensions						TSS Part No.	Description Material code
D_N H9	**d1** h9	**L1** +0.2	**d2** h9	**d3** h11	**L2** +0.1	**r max**		**N8RO**
25.0	15.00	16.40	21.45	23.50	6.35	0.40	PCB1N0250	DBM 098059
30.0	17.00	15.40	26.50	28.50	6.35	0.40	PCB000300	DBM 118066
32.0	22.0	16.40	28.50	30.50	6.35	0.40	PCB1A0320	DBM 125086
35.0	25.00	16.40	31.40	33.50	6.35	0.40	PCB1A0350	DBM 137098
40.0	24.00	18.40	35.40	38.50	6.35	0.40	PCB0A0400	DBM 157094
40.0	26.00	15.50	36.00	39.00	2.60	0.40	PCB1A0400	DBM 157102/M
40.0	30.00	16.40	35.40	38.50	6.35	0.40	PCB3A0400	DBM 157118
45.0	29.00	18.40	40.40	43.50	6.35	0.40	PCB0N0450	DBM 177114
45.0	35.00	16.40	40.40	43.50	6.35	0.40	PCB2N045	DBM 177137
50.0	34.00	18.40	45.40	48.50	6.35	0.40	PCB1A0500	DBM 196133
50.0	34.00	20.50	46.00	49.00	3.10	0.40	PCB0B0500	DBM 196133/M
55.0	39.00	18.40	50.36	53.50	6.35	0.40	PCB1A0550	DBM 216153
60.0	44.00	18.40	55.40	58.50	6.35	0.40	PCB1A0600	DBM 236173
60.0	44.00	20.50	56.00	59.00	3.10	0.40	PCB0B0600	DBM 236173/M
63.0	47.00	18.40	58.40	61.50	6.35	0.40	PCB1A0630	DBM 248185
63.0	47.00	20.50	59.00	62.00	3.10	0.40	PCB0B0630	DBM 248185/M
65.0	49.00	20.50	61.00	64.00	3.10	0.40	PCB0N0650	DBM 255192/M
65.0	50.00	18.40	60.40	63.50	6.35	0.40	PCB1A0650	DBM 255196
70.0	50.00	22.40	64.20	68.30	6.35	0.40	PCB0A0700	DBM 275196
70.0	54.00	20.50	66.00	69.00	3.10	0.40	PCB1N0700	DBM 275212/M
75.0	55.00	22.40	69.20	73.30	6.35	0.40	PCB0A0750	DBM 295216
80.0	60.00	22.40	74.15	78.30	6.35	0.40	PCB0A0800	DBM 314236
80.0	62.00	22.50	76.00	79.00	3.60	0.40	PCB1A0800	DBM 314244/M
85.0	65.00	22.40	79.15	83.30	6.35	0.40	PCB0A0850	DBM 334255
90.0	70.00	22.40	84.15	88.30	6.35	0.40	PCB0A0900	DBM 354275
95.0	75.00	22.40	89.15	93.30	6.35	0.40	PCB0A0950	DBM 374295
100.0	75.00	22.40	93.15	98.00	6.35	0.40	PCB0A1000	DBM 393295
100.0	82.00	22.50	96.00	99.00	3.60	0.40	PCB1A1000	DBM 393332/M
105.0	80.00	22.40	98.10	103.00	6.35	0.40	PCB0A1050	DBM 413314
110.0	85.00	22.40	103.10	108.00	6.35	0.40	PCB0A1100	DBM 433334
115.0	90.00	22.40	108.10	113.00	6.35	0.40	PCB0A1150	DBM 452354
120.0	95.00	22.40	113.10	118.10	6.35	0.80	PCB0A1200	DBM 472374
125.0	100.00	25.40	118.10	123.00	6.35	0.80	PCB0A1250	DBM 492393
125.0	103.00	26.50	121.00	124.00	5.10	0.80	PCB1A1250	DBM 492405/M
130.0	105.00	25.40	122.60	127.50	9.50	0.80	PCB1A1300	DBM 511413
133.0	115.00	22.40	125.60	130.50	9.52	0.80	PCB001330	DBM 523452

Additional dimensions can be delivered on request.

Bore Diameter	Groove Dimensions						TSS Part No.	Description Material code
D_N H9	**d1** h9	**L1** +0.2	**d2** h9	**d3** h11	**L2** +0.1	**r max**		**N8RO**
135.0	110.00	25.40	127.60	132.50	9.50	0.80	PCB1A1350	DBM 531433
140.0	115.00	25.40	132.60	137.50	9.50	0.80	PCB1A1400	DBM 551452
140.0	118.00	26.50	136.00	139.00	5.10	0.80	PCB2A1400	DBM 551464/M
145.0	120.00	25.40	137.60	142.50	9.50	0.80	PCB1A1450	DBM 570472
150.0	125.00	25.40	142.60	147.50	9.50	0.80	PCB1A1500	DBM 590492
152.4	127.00	31.75	145.00	149.91	9.50	0.80	PCB001524	DBM 600500
155.0	130.00	25.40	147.60	152.50	9.50	0.80	PCB0A1550	DBM 610511
160.0	130.00	25.40	152.60	157.50	9.50	0.80	PCB3A1600	DBM 629511
160.0	135.00	25.40	152.60	157.50	9.50	0.80	PCB1A1600	DBM 629531
165.0	140.00	25.40	157.60	162.50	9.50	0.80	PCB0A1650	DBM 649551
170.0	145.00	25.40	161.70	167.10	12.70	0.80	PCB0A1700	DBM 669570
175.0	150.00	25.40	166.70	172.10	12.70	0.80	PCB0A1750	DBM 688590
180.0	155.00	25.40	171.70	177.10	12.70	0.80	PCB1A1800	DBM 708610
185.0	160.00	25.40	176.70	182.10	12.70	0.80	PCB0A1850	DBM 728629
190.0	165.00	25.40	181.70	187.00	12.70	0.80	PCB0A1900	DBM 748649
195.0	170.00	25.40	186.70	192.00	12.70	0.80	PCB0A1950	DBM 767669
200.0	175.00	25.40	191.60	197.00	12.70	0.80	PCB0A2000	DBM 787688
200.0	175.00	31.50	196.00	199.00	6.60	0.80	PCB102000	DBM 787688/M
210.0	185.00	25.40	201.60	207.00	12.70	0.80	PCB0A2100	DBM 826728
220.0	195.00	25.40	211.60	217.00	12.70	0.80	PCB1A2200	DBM 866767
230.0	205.00	25.40	221.60	227.00	12.70	0.80	PCB0A2300	DBM 905807
240.0	215.00	25.40	231.60	237.00	12.70	0.80	PCB0A2400	DBM 944846
250.0	225.00	25.40	241.60	247.00	12.70	0.80	PCB1A2500	DBM 984886

Additional dimensions can be delivered on request.

Zurcon® Compact Seals

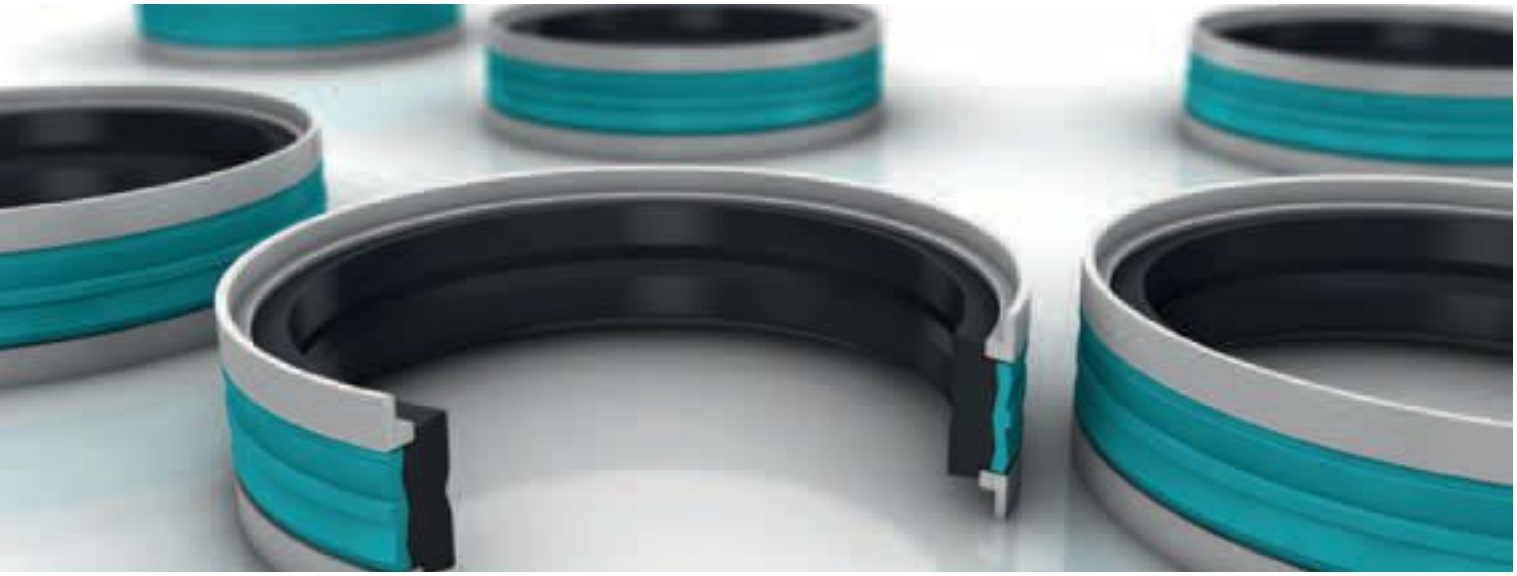

Double Acting

Combined Seal and
Guide Element

Material:
Zurcon®, NBR + POM

■ PU DAS and Polypac® EUD

Description

The Compact Seals are double-acting piston seals with integrated guide rings . The combination of the elastomer energiser and the polyurethane special shaped sealing element provide excellent sealing effect and service life. The function of the guide rings is to guide the piston in the cylinder tube and to absorb transverse forces.

Type PU DAS

For the Compact Seal PU DAS is designed without Back-up rings. For easy installation in closed grooves, the combination into one stiff sealing element and one soft energizing element is required. Back-up rings are unnecessary thanks to the high extrusion resistance of the polyurethane material.

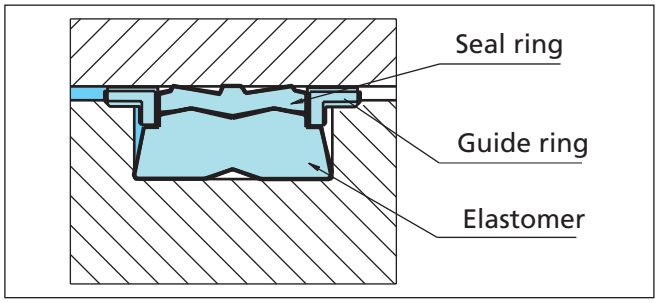

Figure 55 Compact Seal, Type PU DAS

Type Polypac® EUD

The Compact Seal EUD design includes T-shaped Back-up/ guide rings and a combination of seal ring and energiser.

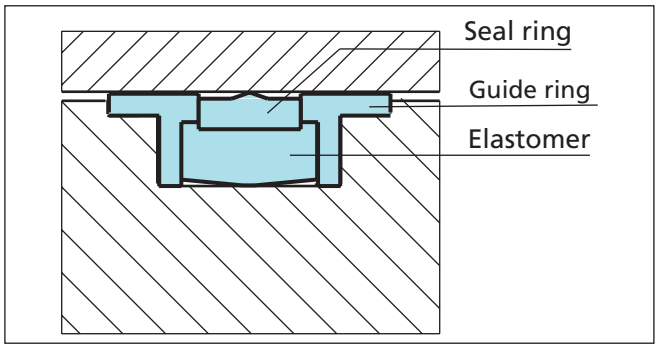

Figure 56 Compact Seal, Type EUD

Advantages

- High wear resistance
- Low compression set
- Optimal leakage control
- Easy installation into closed grooves
- Excellent service life

Application Examples

The Zurcon® Compact seals are the recommended sealing element for double acting pistons of hydraulic cylinders for:

- Truck cranes
- Mini excavators
- Heavy duty cylinders

Technical Data

Operating conditions

Pressure:	Up to 40 MPa
Speed:	Up to 0.5 m/s
Temperature:	-35 °C to +110 °C
Media:	Mineral oil based hydraulic fluids

Important Note:
The above data are maximum values and cannot be used at the same time. e.g. the maximum operating speed depends on material type, pressure, temperature and gap value.
Temperature range also dependent on medium.

Materials

- The Polyurethane Compact seals PU DAS and EUD are available in the following composition:

Sealing ring:	Zurcon® Polyurethane 93 Shore A	
Energiser:	NBR	
	70 Shore A	Type PU DAS
	78 Shore A	Type EUD
Guide rings:	HM061	Type PU DAS
	POM	Type EUD
Set references:	Z2052	Type PU DAS
	Z2053	Type EUD

■ Installation Recommendation, (PU DAS)

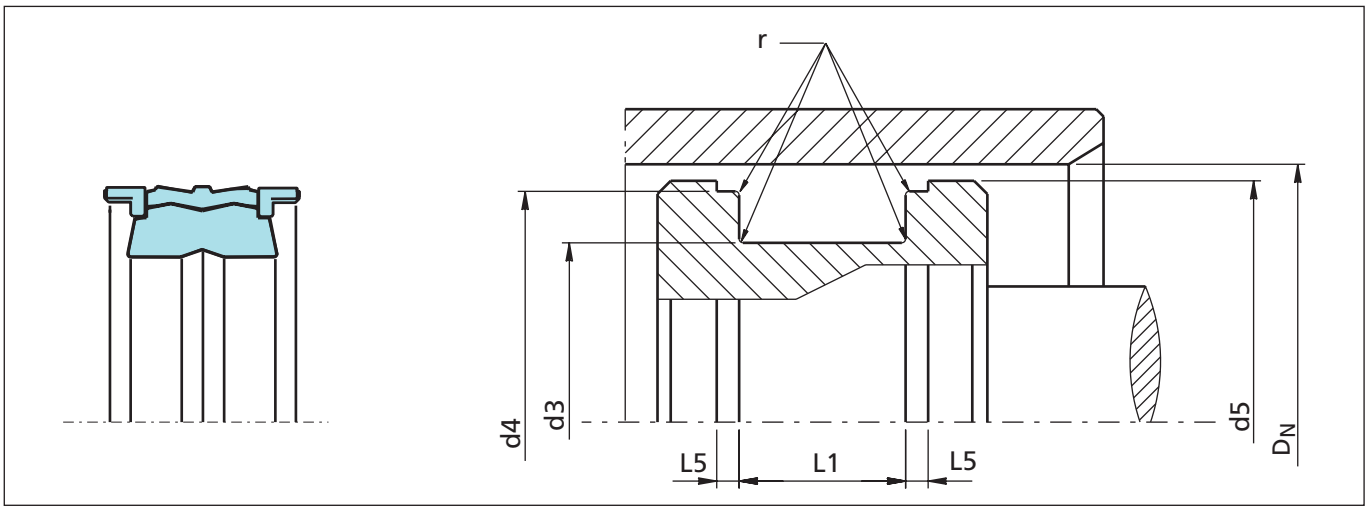

Figure 57 Installation drawing

Table LVI Installation dimensions / TSS Article No.

Bore Dia.	Groove Dimensions					Piston Dia.	TSS Article No.
D_N H9	d_3 h9	d_4 h9	L_1 +0.2	L_5 +0.1	r max	d_5 h11	
40.0	26.0	36.00	15.5	2.60	0.4	38.50	PCC000400-Z2052
45.0	31.0	41.00	15.5	2.60	0.4	44.00	PCC000450-Z2052
50.0	34.0	46.00	20.5	3.10	0.4	49.00	PCC000500-Z2052
55.0	39.0	51.00	20.5	3.10	0.4	54.00	PCC000550-Z2052
60.0	44.0	56.00	20.5	3.10	0.4	59.00	PCC000600-Z2052
63.0	47.0	59.00	20.5	3.10	0.4	62.00	PCC000630-Z2052
65.0	49.0	61.00	20.5	3.10	0.4	64.00	PCC000650-Z2052
70.0	54.0	66.00	20.5	3.10	0.4	69.00	PCC000700-Z2052
75.0	59.0	71.00	20.5	3.10	0.4	74.00	PCC000750-Z2052
80.0	62.0	76.00	22.5	3.60	0.4	79.00	PCC000800-Z2052
90.0	72.0	86.00	22.5	3.60	0.4	89.00	PCC000900-Z2052
100.0	82.0	96.00	22.5	3.60	0.4	99.00	PCC001000-Z2052
110.0	92.0	106.00	22.5	3.60	0.4	109.00	PCC001100-Z2052
125.0	103.0	121.00	26.5	5.10	0.8	124.00	PCC001250-Z2052
140.0	118.0	136.00	26.5	5.10	0.8	139.00	PCC001400-Z2052
150.0	128.0	146.00	26.5	5.10	0.8	149.00	PCC001500-Z2052
160.0	138.0	156.00	26.5	5.10	0.8	159.00	PCC001600-Z2052
165.0	143.0	161.00	26.5	5.10	0.8	164.00	PCC001650-Z2052
170.0	148.0	166.00	26.5	5.10	0.8	169.00	PCC001700-Z2052
180.0	158.0	176.00	26.5	5.10	0.8	179.00	PCC001800-Z2052
200.0	175.0	196.00	31.5	6.60	0.8	199.00	PCC002000-Z2052

Bore Dia.	Groove Dimensions					Piston Dia.	TSS Article No.
D_N H9	d_3 h9	d_4 h9	L_1 +0.2	L_5 +0.1	r max	d_5 h11	
250.0	220.0	242.90	35.4	6.35	0.8	248.00	PCC002500-Z2052
270.0	240.0	262.90	35.4	6.35	0.8	267.00	PCC002700-Z2052

■ Installation Recommendation, Type EUD

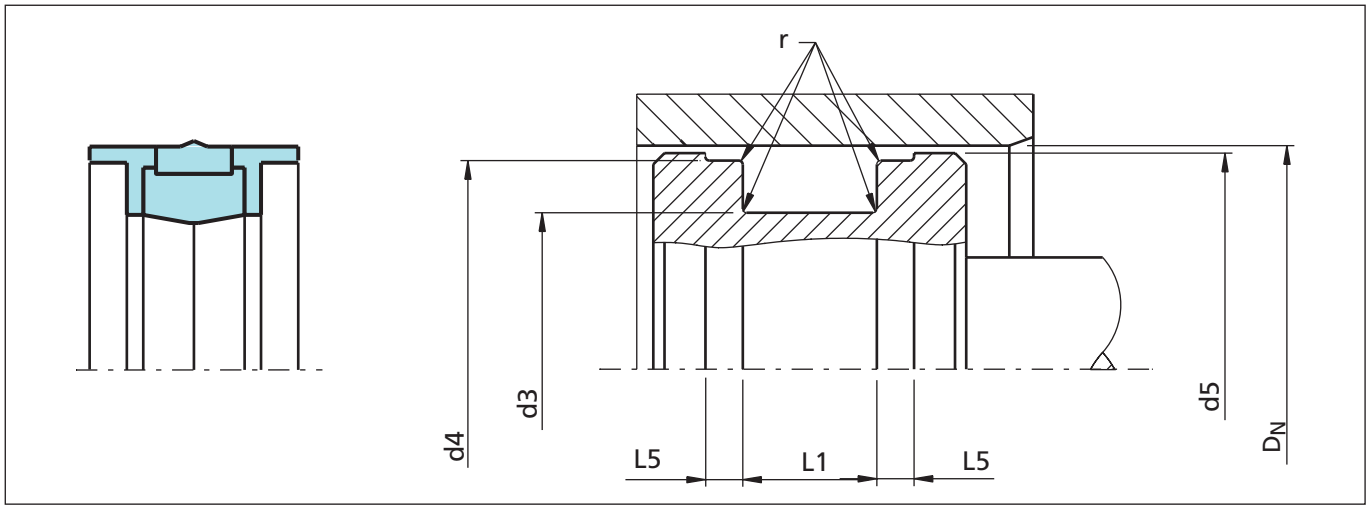

Figure 58 Installation drawing

Table LVII Installation dimensions / TSS Article No.

Bore Dia.	Groove Dimensions					Piston Dia.	TSS Article No.	Description
D_N H9	d_3 h9	d_4 h9	L_1 +0.2	L_5 +0.1	r max	d_5 h11		
40.0	32.0	36.0	10.0	4.2	0.2	39.40	PCG000400-Z2053	EUD4032/1-Z20
50.0	38.0	46.0	20.5	4.2	0.2	49.40	PCG000500-Z2053	EUD5038-Z20
50.0	40.0	46.0	12.5	4.2	0.2	49.40	PCG100500-Z2053	EUD5040/1-Z20
55.0	43.0	51.0	20.5	4.2	0.2	54.40	PCG000550-Z2053	EUD5543-Z20
60.0	48.0	56.0	20.5	4.2	0.2	59.40	PCG000600-Z2053	EUD6048-Z20
63.0	51.0	59.0	20.5	4.2	0.2	62.40	PCG000630-Z2053	EUD6351-Z20
65.0	53.0	61.0	20.5	4.2	0.2	64.40	PCG000650-Z2053	EUD6553-Z20
65.0	55.0	61.0	12.5	4.2	0.2	64.40	PCG100650-Z2053	EUD6555/1-Z20
70.0	58.0	66.0	20.5	4.2	0.2	69.40	PCG000700-Z2053	EUD7058-Z20
80.0	66.0	76.0	22.5	5.2	0.2	79.40	PCG000800-Z2053	EUD8066-Z20
85.0	71.0	81.0	22.5	5.2	0.2	84.40	PCG000850-Z2053	EUD8571-Z20
90.0	76.0	86.0	22.5	5.2	0.2	89.40	PCG000900-Z2053	EUD9076-Z20
100.0	86.0	96.0	22.5	5.2	0.2	99.40	PCG001000-Z2053	EUD10086-Z20
110.0	96.0	106.0	22.5	5.2	0.2	109.40	PCG001100-Z2053	EUD11096-Z20
120.0	106.0	116.0	22.5	5.2	0.2	119.40	PCG001200-Z2053	EUD120106-Z20
125.0	108.0	121.0	26.5	7.2	0.4	124.40	PCG001250-Z2053	EUD125108-Z20
140.0	123.0	136.0	26.5	7.2	0.4	139.40	PCG001400-Z2053	EUD140123-Z20
160.0	143.0	156.0	26.5	7.2	0.4	159.40	PCG001600-Z2053	EUD160143-Z20

Compact Seal
POLYPAC® - Duopac DPS/DPC

Double Acting

Combined Seal and
Guide Element

Material:
Rubber Fabric Reinforced NBR
and POM

■ DUOPAC rubber fabric reinforced compact seals Type DPS and DPC

Description

The compact seals DUOPAC DPS and DPC types are double acting piston seals with integrated guide rings. DUOPAC has been designed to optimize the advantages of the materials selection:

- Fabric reinforcement with high mechanical strength, optimum thermal stability and lubricating properties is incorporated in the sealing element all over the dynamic contact area. For the DUOPAC DPC the reinforcement is extended on both sides to improve the extrusion resistance
- Nitrile based elastomer with optimum elasticity and low compression set provides the initial radial pre-load
- Acetal resin with improved form stability gives the Guide/ backup rings high distortion and extrusion resistance

Type DPS

The DPS profile has been designed for its installation in closed grooves. The radial dimension of the profile has been reduced to the minimum to allow the necessary deformation during installation in closed grooves.

Consequently its use must be limited to pressures up to 35 MPa.

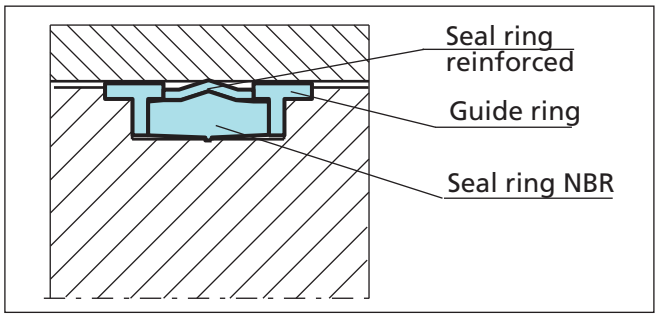

Figure 59 Compact Seal, Type DPS

Type DPC

The DPC profile is much more robust and can therefore be used for pressure level up to 70 MPa.

An open groove is necessary.

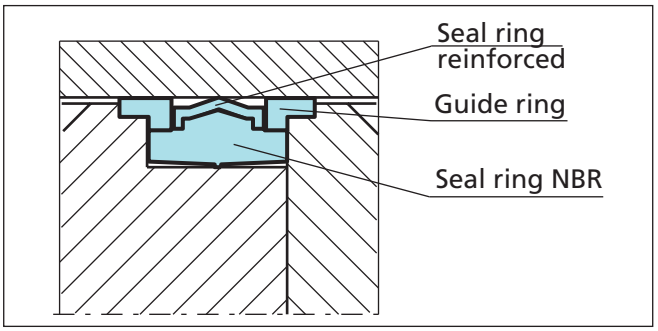

Figure 60 Compact Seal, Type DPC

Advantages

- DPS can be installed into closed grooves but its use must consequently be limited to medium duty applications
- DPC are usually installed in open grooves in Heavy Duty applications (pressure peak up to 80MPa)
- Improved abrasion resistance
- Excellent sealing effect in combination with good dynamic and static friction behavior

Application Examples

The Compact seals are the recommended Sealing element for double acting Pistons of hydraulic components in following applications:

- Mining cylinders
- Presses
- Steel mills equipment
- Water hydraulic cylinders

Technical Data

Operating conditions:

For an optimum performance of the DUOPAC, the recommended tolerances and surface finish must be applied.

Pressure:	Up to 35 MPa DPS type Up to 70 MPa DPC type
Speed:	Up to 0.5 m/s
Temperature:	-30 °C to +130 °C
Media:	Mineral oil based hydraulic fluids, water/oil and water/glycol emulsions.

Important Note:
The above data are maximum values and cannot be used at the same time. e.g. the maximum operating speed depends on material type, pressure, temperature and gap value.
Temperature range also dependent on medium.

Materials

- The compact seals DUOPAC are available in the following material composition:

Sealing element: Rubber fabric reinforced NBR

Guide/Back-up Rings:	POM
Material set-code:	N00OC

■ Installation Recommendation, Type DPS

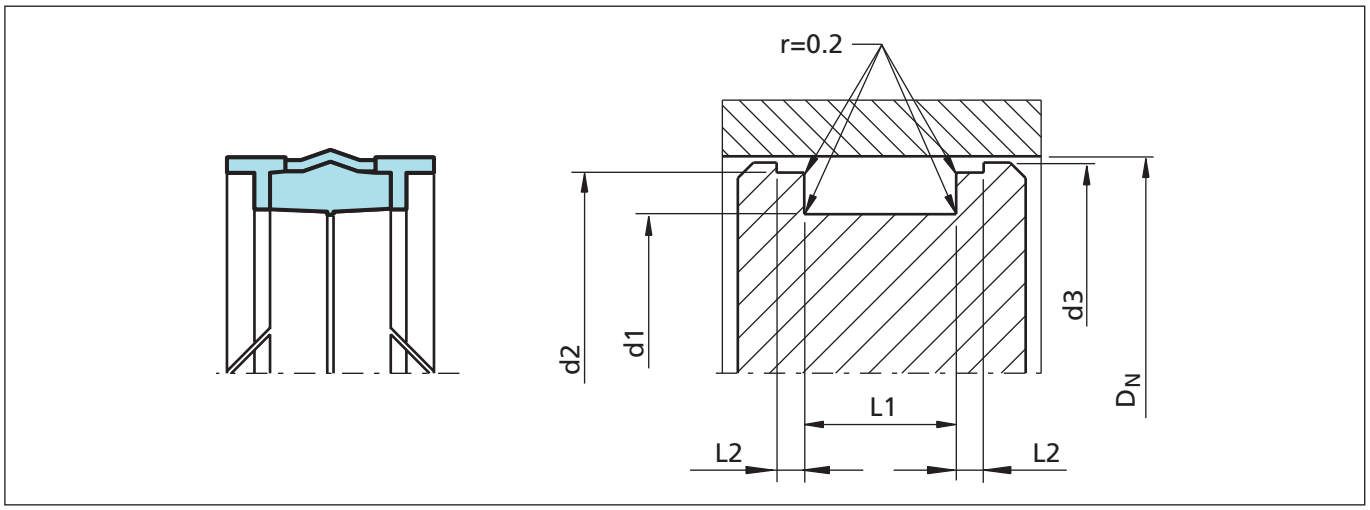

Figure 61 Installation drawing

Ordering Example

Compact Seal Type DPS

Bore diameter:	D_N = 80 mm
Groove diameter:	d1 = 66 mm
Groove width:	L1 = 22.5 mm
TSS Part No.:	PCE100800 (from Table LVIII)
Material set-code:	N00OC

TSS Article No. PCE1 0 0800 - N00OC

- TSS Series No.
- Type (Standard)
- Bore diameter x 10
- Quality Index (Standard)
- Material set-code

Polypac Ref. No.: DPS 8066

Table LVIII Installation dimensions / TSS Article No.

Bore Dia.	Groove Dimensions					TSS Article No.	Description
D_N H11	**d1** h9	**L1** +0.2	**L2** +0.1	**d2** h9	**d3** h11		
25.0	**17.0**	**10.0**	**4.0**	**22.0**	**24.0**	**PCE000250-N00OC**	**DPS 2517/1**
32.0	24.0	15.5	3.2	28.0	31.4	PCE000320-N00OC	DPS 3224
32.0	**24.0**	**10.0**	**4.0**	**29.0**	**31.0**	**PCE100320-N00OC**	**DPS 3224/1**
35.0	27.0	15.5	3.2	31.0	34.4	PCE000350-N00OC	DPS 3527
40.0	32.0	15.5	3.2	36.0	39.4	PCE000400-N00OC	DPS 4032
40.0	**32.0**	**10.0**	**4.0**	**37.0**	**39.0**	**PCE100400-N00OC**	**DPS 4032/1**
45.0	37.0	15.5	3.2	41.0	44.4	PCE000450-N00OC	DPS 4537
50.0	38.0	20.5	4.2	46.0	49.4	PCE000500-N00OC	DPS 5038
50.0	**40.0**	**12.5**	**4.0**	**47.0**	**49.0**	**PCE100500-N00OC**	**DPS 5040/1**
55.0	43.0	20.5	4.2	51.0	54.4	PCE000550-N00OC	DPS 5543
60.0	48.0	20.5	4.2	56.0	59.4	PCE000600-N00OC	DPS 6048
63.0	51.0	20.5	4.2	59.0	62.4	PCE000630-N00OC	DPS 6351
63.0	**53.0**	**12.5**	**4.0**	**60.0**	**62.0**	**PCE100630-N00OC**	**DPS 6353/1**
65.0	53.0	20.5	4.2	61.0	64.4	PCE000650-N00OC	DPS 6553
70.0	58.0	20.5	4.2	66.0	69.4	PCE000700-N00OC	DPS 7058
75.0	63.0	20.5	4.2	71.0	74.4	PCE000750-N00OC	DPS 7563
80.0	**65.0**	**20.0**	**5.0**	**76.0**	**78.5**	**PCE000800-N00OC**	**DPS 8065/1**
80.0	66.0	22.5	5.2	76.0	79.4	PCE100800-N00OC	DPS 8066
85.0	71.0	22.5	5.2	81.0	84.4	PCE000850-N00OC	DPS 8571
90.0	76.0	22.5	5.2	86.0	89.4	PCE000900-N00OC	DPS 9076
100.0	**85.0**	**20.0**	**5.0**	**96.0**	**98.5**	**PCE001000-N00OC**	**DPS 10085/1**
100.0	86.0	22.5	5.2	96.0	99.4	PCE101000-N00OC	DPS 10086
110.0	96.0	22.5	5.2	106.0	109.4	PCE001100-N00OC	DPS 11096
120.0	106.0	22.5	5.2	116.0	119.4	PCE001200-N00OC	DPS 120106
125.0	**105.0**	**25.0**	**6.3**	**120.0**	**123.0**	**PCE001250-N00OC**	**DPS 125105/1**
125.0	108.0	26.5	7.2	121.0	124.4	PCE101250-N00OC	DPS 125108
140.0	120.0	25.0	6.3	135.0	138.0	PCE001400-N00OC	DPS 140120/1
140.0	123.0	26.5	7.2	136.0	139.4	PCE101400-N00OC	DPS 140123
150.0	133.0	26.5	7.2	146.0	149.4	PCE001500-N00OC	DPS 150133
160.0	**140.0**	**25.0**	**6.3**	**155.0**	**158.0**	**PCE001600-N00OC**	**DPS 160140/1**
160.0	143.0	26.5	7.2	156.0	159.4	PCE101600-N00OC	DPS 160143
180.0	163.0	26.5	7.2	176.0	179.4	PCE001800-N00OC	DPS 180163
200.0	**170.0**	**36.0**	**12.5**	**192.0**	**197.0**	**PCE002000-N00OC**	**DPS 200170/1**
200.0	180.0	31.5	9.2	196.0	199.4	PCE102000-N00OC	DPS 200180
220.0	200.0	31.5	9.2	216.0	219.4	PCE002200-N00OC	DPS 220200
250.0	230.0	31.5	9.2	246.0	249.4	PCE002500-N00OC	DPS 250230

The bore diameters in **bold** type comply with the recommendations of ISO 6547.

■ Installation Recommendation, Type DPC

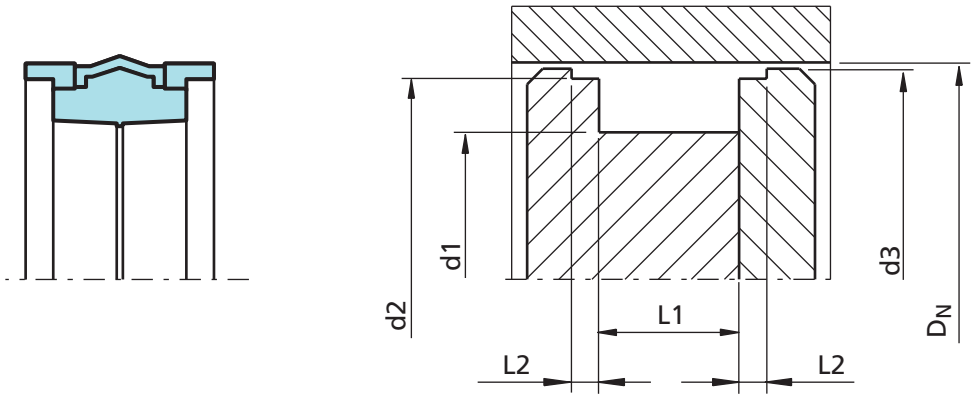

Figure 62 Installation drawing

Ordering Example

Compact Seal Type DPC

Bore diameter:	D_N = 80 mm
Groove diameter:	d1 = 60 mm
Groove width:	L1 = 22.4 mm
TSS Part No.:	PCF000800 (from Table LIX)
Material set-code:	N00OC

TSS Article No. PCF0 0 0800 - N00OC

- TSS Series No.
- Type (Standard)
- Bore diameter x 10
- Quality Index (Standard)
- Material set-code

Polypac Ref. No.: DPC 8060

Table LIX Installation dimensions / TSS Article No.

Bore Dia.	Groove Dimensions					TSS Article No.	Description
D_N H11	**d1** h9	**L1** +0.2	**L2** +0.1	**d2** h11	**d3** h11		
30.0	17.0	15.4	6.35	26.50	29.00	PCF000300-N00OC	DPC 3017
35.0	22.0	15.4	6.35	31.40	33.70	PCF000350-N00OC	DPC 3522
40.0	24.0	18.4	6.35	35.40	38.70	PCF000400-N00OC	DPC 4024
45.0	29.0	18.4	6.35	40.40	43.70	PCF000450-N00OC	DPC 4529
50.0	34.0	18.4	6.35	45.40	48.70	PCF000500-N00OC	DPC 5034
55.0	39.0	18.4	6.35	50.40	53.70	PCF000550-N00OC	DPC 5539
60.0	44.0	18.4	6.35	55.40	58.70	PCF000600-N00OC	DPC 6044
65.0	50.0	18.4	6.35	60.40	63.70	PCF000650-N00OC	DPC 6550
70.0	50.0	22.4	6.35	64.20	68.30	PCF000700-N00OC	DPC 7050
75.0	55.0	22.4	6.35	69.20	73.30	PCF000750-N00OC	DPC 7555
80.0	60.0	22.4	6.35	74.20	78.30	PCF000800-N00OC	DPC 8060
85.0	65.0	22.4	6.35	79.20	83.30	PCF000850-N00OC	DPC 8565

Bore Dia.	Groove Dimensions					TSS Article No.	Description
D_N H11	**d1** h9	**L1** +0.2	**L2** +0.1	**d2** h11	**d3** h11		
90.0	70.0	22.4	6.35	84.15	88.30	PCF000900-N00OC	DPC 9070
95.0	75.0	22.4	6.35	89.15	93.30	PCF000950-N00OC	DPC 9575
100.0	75.0	22.4	6.35	93.15	98.05	PCF001000-N00OC	DPC 10075
100.0	80.0	25.4	6.35	94.15	98.30	PCF101000-N00OC	DPC 10080
105.0	85.0	22.4	6.35	98.10	103.00	PCF001050-N00OC	DPC 10585
110.0	85.0	22.4	6.35	103.10	108.00	PCF001100-N00OC	DPC 11085
120.0	100.0	25.4	6.35	114.10	118.00	PCF001200-N00OC	DPC 120100
130.0	105.0	25.4	6.35	123.10	128.00	PCF001300-N00OC	DPC 130105
140.0	115.0	25.4	6.35	133.00	138.00	PCF001400-N00OC	DPC 140115
150.0	125.0	25.4	6.35	143.00	148.00	PCF001500-N00OC	DPC 150125
160.0	135.0	33.0	6.35	153.00	158.00	PCF001600-N00OC	DPC 160135

POLYPAC® - Veepac CH

Single Acting

Set of Chevron Ring

With Support and Pressure Energizing Ring

Without and with Anti-extrusion Ring

Material:
Farbric Reinforced Rubber - POM or PTFE

■ Veepac CH

Description

Veepac seals are sets of fabric reinforced chevron rings. They are composed by a support ring, "V" shaped sealing rings and a pressure energizing ring.

The support ring or base ring guides and sustains the other "V" shaped rings for best performance. Special versions provide incorporated anti-extrusion rings, either on the inner or outer side, for rod or piston applications (see type CH/NEI or CH/NEO). In standard version the support ring is manufactured in cotton fabric reinforced rubber, for a good anti-extrusion resistance.

The intermediate "V" shaped rings (vee-rings) are the real sealing elements of Veepac seals. Their particular shape confirs the capacity of increasing sealing effectiveness under high pressure. In standard version they are made in cotton fabric reinforced NBR and pure NBR.

The energizer ring ensures uniform loading of pressure on the other rings. This element is manufactured in acetal resin, or cotton fabric reinforced nitrile for diameters over 300 mm (standard material).

Design

The veepac seals are available in different compositions. The standard version consists in a support ring, two fabric reinforced vee-rings, one rubber vee-ring and the energizing ring.

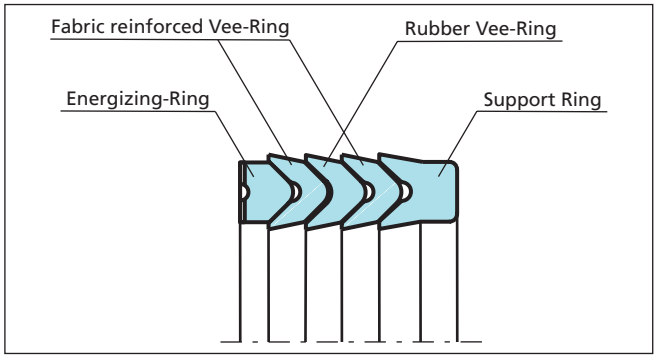

Figure 63 Veepac standard design

When the rubber vee-ring isn't available (indicated in the Table LXI with the symbol ^) the veepac are assembled with three fabric reinforced vee-ring as shown in figure below.

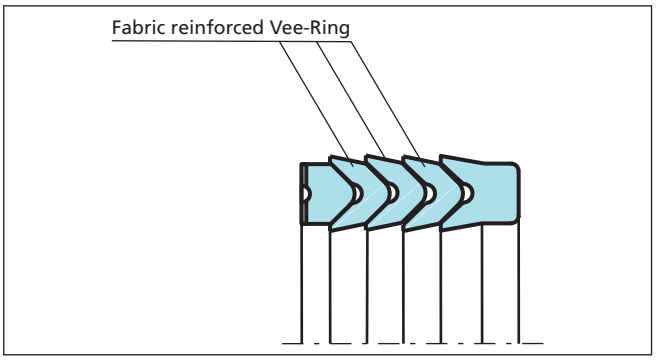

Figure 64 Veepac design with 3 fabric reinforced vee-ring

Where extrusion gaps are greater than those specified or for higher pressure conditions, special designs incorporating anti-extrusion rings can be made, to suit piston (suffix NEO) at the Polypac ref.

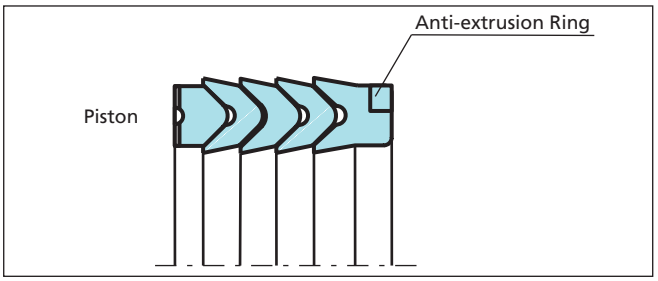

Figure 65 Veepac design with anti-extrusion ring

Advantages

- Exceptional wear resistance
- Pre-load adjustment capability
- Excellent behaviour in harsh conditions
- Rod-seal replacement without complete cylinder dismantling possible
- Long service life

Application Examples

VEEPAC seals are recommended for single acting or double acting (back to back installation) hydraulic cylinders in the following applications:

- Ship hydraulics
- Excavators
- Steel mills
- Presses

Technical Data

Pressure:	Up to 40 MPa
Velocity:	Up to 0.5 m/s
Temperature:	-30 °C to +200 °C
Media:	Hydraulic fluids Mineral Oil based hydraulic fluids, Water/oil and Water/ Glycol emulsions.
Groove type:	Open

Important Note:
The above data are maximum values and cannot be used at the same time. e.g. the maximum operating speed depends on material type, pressure, temperature and gap value.
Temperature range also dependent on medium.

Gap Dimensions

To prevent extrusion the diameter not facing the pressure must be max. 0.3 mm smaller (than the piston seal) and 0.3 mm larger (than the rod seal). Using Veepac with Back-up Ring enables double values.

Materials

Components of the VEEPAC seals are made in different combinations of materials, according to the specific application (see table below).

Table LX Material Selection

Material Set Code	Temperature	Sealing Ring Material	Energizer Ring Material	
N0O0C	-30 to +130 °C	Cotton reinforced NBR	POM-GL-BK	up to 300 mm I.D.
			Cotton reinforced NBR	over 300 mm I.D.
V0O0A	-20 to +150 °C	Aramidic Fibre reinforced FKM	POM-GL-BK	up to 300 mm I.D.
			Aramidic Fibre reinforced FKM	over 300 mm I.D.
V0P0A	-20 to +200 °C	Aramidic Fibre reinforced FKM	Filled PTFE	up to 300 mm I.D.
			Aramidic Fibre reinforced FKM	over 300 mm I.D.

Highlighted material is standard.

■ Installation Recommendation, Type POLYPAC® CH/NEO (with Back-up Ring)

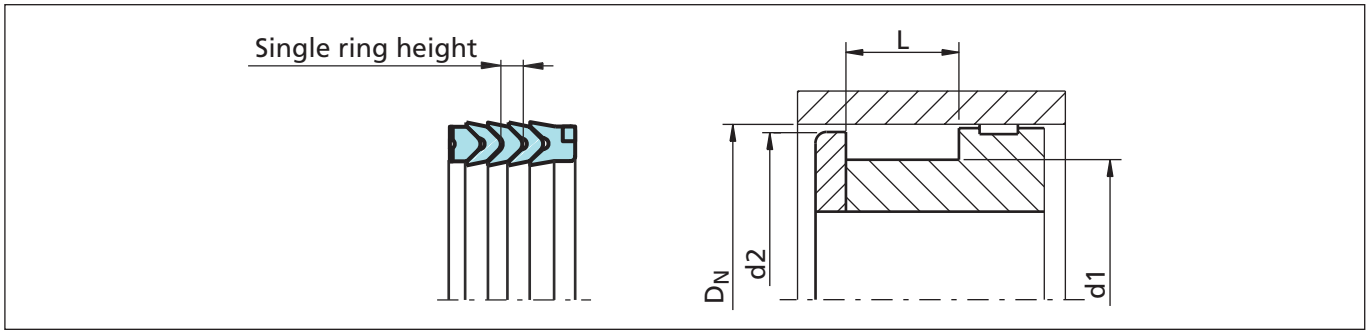

Figure 66 Installation drawing

Ordering Example

For a **piston** application of standard Veepac sealing element composed by: Support ring **with anti-extrusion ring,** 3 elements vee-rings and Energizer ring:

Bore diameter:	D_N = 150.0 mm
Groove diameter:	d1 = 120.0 mm
TSS Part No.:	PCH0 E 1500
Material Set-Code:	N0O0C
Polypac Part. No.:	CH 590472/NEO

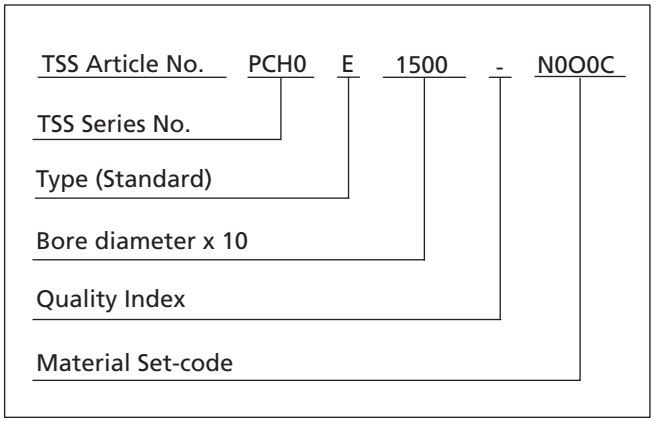

Table LXI Installation dimensions / TSS Part No.

Bore Diameter	Groove Diameter	Groove Width	Diameter	Single Ring Height	Special Version		TSS Part No.	Polypac Ref. No.*
D_N H9/f8	**d1** h11	**L** -0.25	**d2** +/-0.1					
80.00	60.00	32.15	79.00	5.66			PCH1E0800	CH 314236/NEO
88.90	69.85	35.50	87.90	4.83			PCH0E0889	CH 350275/1/NEO
90.00	70.00	30.00	89.00	5.08			PCH0E0900	CH 354275/NEO
95.25	76.20	28.97	94.20	5.16			PCH0E0952	CH 375300/NEO
95.25	82.55	21.72	94.20	3.71	#	^	PCH1E0952	CH 375325/NEO
101.60	85.72	26.75	100.60	4.14		^	PCH0E1016	CH 400337/NEO
107.95	88.90	31.00	106.90	4.90		^	PCH0E1079	CH 425350/NEO
114.30	88.90	35.32	113.30	6.55		^	PCH0E1143	CH 450350/NEO
114.30	95.25	25.40	113.30	5.00		^	PCH1E1143	CH 450375/NEO
114.30	98.42	26.59	113.30	4.34		^	PCH2E1143	CH 450387/NEO
125.00	100.00	36.90	124.00	6.60	#	^	PCH1E1250	CH 492393/NEO
125.00	105.00	27.00	124.00	5.00		^	PCH2E1250	CH 492413/1/NEO

* As the Polypac Ref. No. does not refer to the material, please always state the full number if available for identification.
"#" and "^" see Table LXII.

Bore Diameter	Groove Diameter	Groove Width	Diameter	Single Ring Height	Special Version		TSS Part No.	Polypac Ref. No.*
D_N H9/f8	**d1** h11	**L** -0.25	**d2** +/-0.1					
127.00	101.60	32.15	126.00	5.82	#		PCH0E1270	CH 500400/NEO
127.00	107.95	30.00	126.00	4.52		^	PCH1E1270	CH 500425/NEO
139.70	114.30	33.50	138.70	5.56		^	PCH0E1397	CH 550450/1/NEO
140.00	115.00	37.12	139.00	6.00		^	PCH0E1400	CH 551452/NEO
140.00	120.00	30.00	139.00	5.36			PCH1E1400	CH 551472/NEO
150.00	120.00	44.00	149.00	7.50			PCH0E1500	CH 590472/NEO
152.40	127.00	38.63	151.40	6.48			PCH0E1524	CH 600500/NEO
160.00	130.00	41.50	159.00	5.50	#		PCH1E1600	CH 629511/NEO
160.00	130.00	43.50	159.00	5.50	#		PCH2E1600	CH 629511/1/NEO
187.32	171.45	24.20	186.30	4.09	#	^	PCH0E1873	CH 737675/NEO
210.00	180.00	32.97	209.00	5.99			PCH0E2100	CH 826708/B/NEO
222.25	190.50	50.00	221.20	7.57		^	PCH0E2222	CH 875750/NEO
280.00	250.00	32.97	279.00	5.99		^	PCH0E2800	CH 1102984/B/NEO

* As the Polypac Ref. No. does not refer to the material, please always state the full number if available for identification.
"#" and "^" see Table LXII.

Table LXII Explanation to "Special Version"

Not available with rubber V-ring		^		
Available upon request	#			

POLYPAC® - Veepac CH/G1

Single Acting

Chevron Ring

With Support and Pressure Energizing Ring

Material:
POM, PTFE, Farbric Reinforced Rubber

■ Veepac CH/G1

Description

Veepac G1 is a set of fabric reinforced rings comprising one support ring, one sealing ring and a pressure energizing ring. It is a single acting piston seal.

The support ring or base ring is manufactured out of nitrile elastomer with high Shore A hardness and reinforced with impregnated cotton fabric layers for an optimal extrusion resistance.

The intermediate ring - the sealing ring - is a fabric reinforced nitrile elastomer with good resilience characteristics enabling the radial deflection under pressure load. Consequently the optimum sealing force is applied to the bore to be sealed.

The energiser or spreader ring is made of POM or PTFE. Its function is to ensure a uniform pre-load of the seal.

In some specific applications the energiser ring is made out of Acetal resin or Phenolic resin. Please contact our local TSS company for further details.

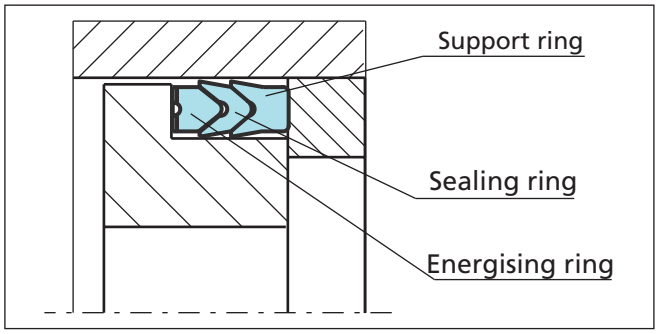

Figure 67 Veepac CH/G1

Advantages

- Exceptional wear resistance
- Pre-load adjustment capability
- Excellent behavior in harsh conditions

Application Examples

The Veepac seal is recommended for single acting or double acting (back to back installation) pistons in following applications:

- Mining equipment
- Excavator cylinders
- Steel mill cylinders
- Presses

Technical Data

Operating conditions:

Pressure:	Up to 40 MPa
Velocity:	Up to 0.5 m/s
Temperature:	-30 °C to +200 °C, depending on material
Media:	Mineral oil, water glycol, water emulsions

Important Note:
The above data are maximum values and cannot be used at the same time. e.g. the maximum operating speed depends on material type, pressure, temperature and gap value.
Temperature range also dependent on medium.

Materials

The following material can be delivered:

Material Set Code	Temperature	Sealing Ring Material	Energiser/ Spreader Ring Material
N0O0C	-30 to +130 °C	Cotton reinforced NBR	POM
V0O0A	-20 to +150 °C	Aramidic fiber reinforced FKM	POM
V0P0A	-20 to +200 °C	Aramidic fiber reinforced FKM	PTFE

Highlighted material is standard.

■ Installation Recommendation, Type CH/G1

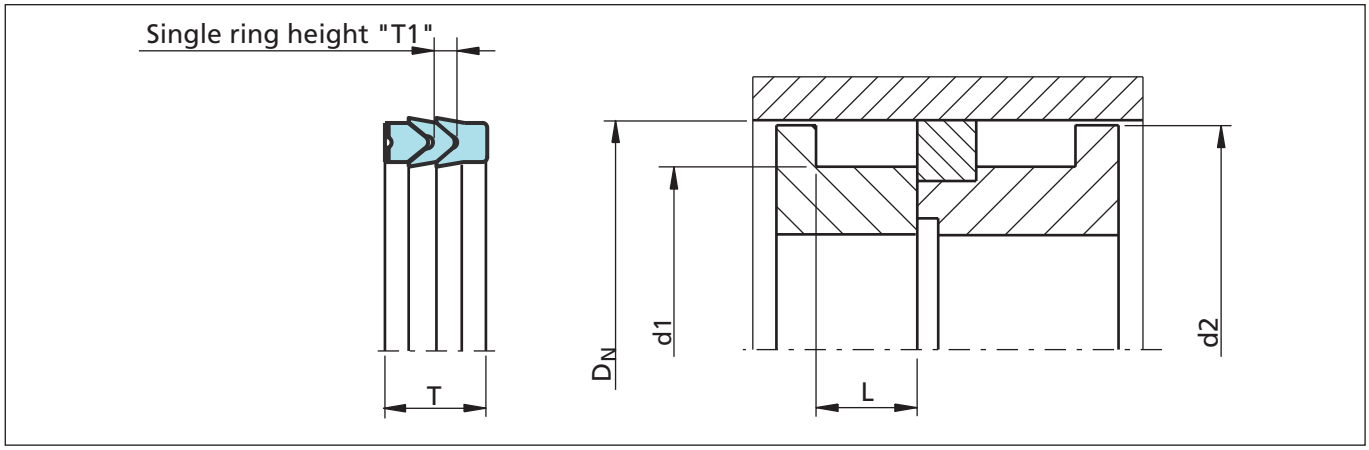

Figure 68 Installation drawing

Ordering Example

For sealing element Veepac CH/G1 comprising 1 base ring and 1 Chevron element in cotton fabric reinforced NBR and the Spreader ring in POM.

Bore diameter: D_N = 80.0 mm
TSS Part No. from Table LXIII: PCH0G0800
Material set-code
from material table above: N0O0C

TSS Article No. PC H0 G 0800 - N0O0C

- Article sub group
- TSS Series No.
- Execution Mark
- Bore diameter x 10
- Quality Index (Standard)
- Material code

Poypac Ref. No.: CH 314236/G1

Table LXIII Installation dimensions / TSS Part No.

Bore Dia.		Groove Dia.	Groove Width	Piston Dia.	Seal Width	Single Ring Height	TSS Part No.	Description
D_N	Tol.	**d1** h11	**L** +0.3	**d2** -0.3	**T**	**T1**		
40.0	H9/f8	25.0	11.5	39.0	11.0	3.2	PCH0G0400	CH 157098/G1
50.0	H9/f8	35.0	11.5	49.0	11.0	3.5	PCH0G0500	CH 196137/G1
55.0	H9/f8	40.0	11.5	54.0	11.0	2.9	PCH0G0550	CH 216157/G1
63.0	H9/f8	48.0	13.0	62.0	12.5	3.7	PCH0G0630	CH 248188/G1
65.0	H9/f8	50.0	11.5	64.0	11.0	3.9	PCH0G0650	CH 255196/G1
80.0	H9/f8	60.0	15.2	79.0	14.6	5.1	PCH0G0800	CH 314236/G1
100.0	H8/f8	80.0	21.2	99.0	20.6	5.0	PCH0G1000	CH 393314/G1
125.0	H8/f7	100.0	25.8	124.0	25.0	6.1	PCH0G1250	CH 492393/G1
140.0	H8/f7	115.0	25.8	139.0	25.0	8.0	PCH0G1400	CH 551452/G1

Further size on Symmetric seal chapter.

Bore Dia.		Groove Dia.	Groove Width	Piston Dia.	Seal Width	Single Ring Height	TSS Part No.	Description
D_N	**Tol.**	**d1** h11	**L** +0.3	**d2** -0.3	**T**	**T1**		
160.0	H8/f7	130.0	29.0	158.5	28.0	6.0	PCH0G1600	CH 629511/G1
180.0	H8/f7	150.0	31.5	178.5	30.5	9.9	PCH0G1800	CH 708590/G1
200.0	H8/f7	170.0	33.5	198.5	32.5	7.4	PCH0G2000	CH 787669/G1
240.0	H8/f7	210.0	33.5	238.5	32.5	10.2	PCH0G2400	CH 944826/G1
250.0	H8/f7	220.0	33.5	248.5	32.5	10.2	PCH0G2500	CH 984866/G1

Further size on Symmetric seal chapter.

POLYPAC® - Selemaster DSM

Double Acting

Compact Piston Seal

Material:
NBR + Fibre Reinforced NBR + POM

■ Selemaster DSM

Description

The piston seal DSM range has been designed to meet the needs of hydraulic equipments operating at high pressures and subjected to severe loading and vibration conditions.

The main sealing element is manufactured in a highly compression set resistant nitrile. The most important quality of this element is the design of the multiple sealing lips for maximum sealing efficiency and end face configuration, which ensures that the selemaster can tolerate vibrations and severe misalignment.

The two support rings are made in cotton fabric reinforced nitrile elastomer; the "U" shape is energised when pressure is applied.

The last elements are the two guide rings manufactured in acetal resin which have also the function of anti-extrusion rings.

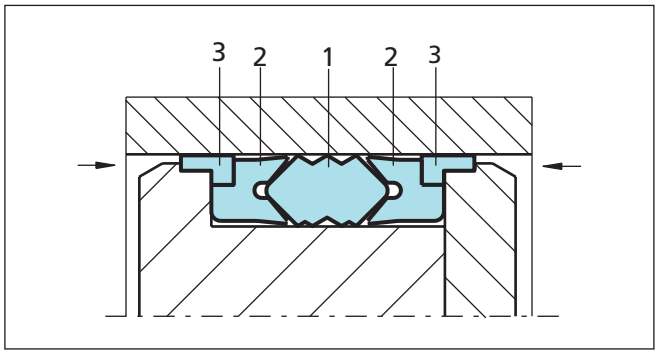

Figure 69 Selemaster design
1) Sealing element
2) Support ring
3) Guide ring

Advantages

- Effective sealing during vibration and shock loading
- High sealing efficiency
- Extrusion resistance at high pressure

Application Examples

- Earth-moving machines
- Excavators
- Lift platforms

Technical Data

Operating conditions

Pressure:	Up to 70 MPa
Velocity:	Up to 0.5 m/s
Temperature:	-40 °C to +130 °C
Media:	Hydraulic fluids Mineral oil-based hydraulic fluids, water and water/glycol emulsions
Groove type:	Open

Important Note:
The above data are maximum values and cannot be used at the same time. e.g. the maximum operating speed depends on material type, pressure, temperature and gap value.
Temperature range also dependent on medium.

Standard Material

1) Sealing element	NBR 80
2) Support ring	Cotton reinforced NBR
3) Guide ring	POM

■ Installation Recommendation

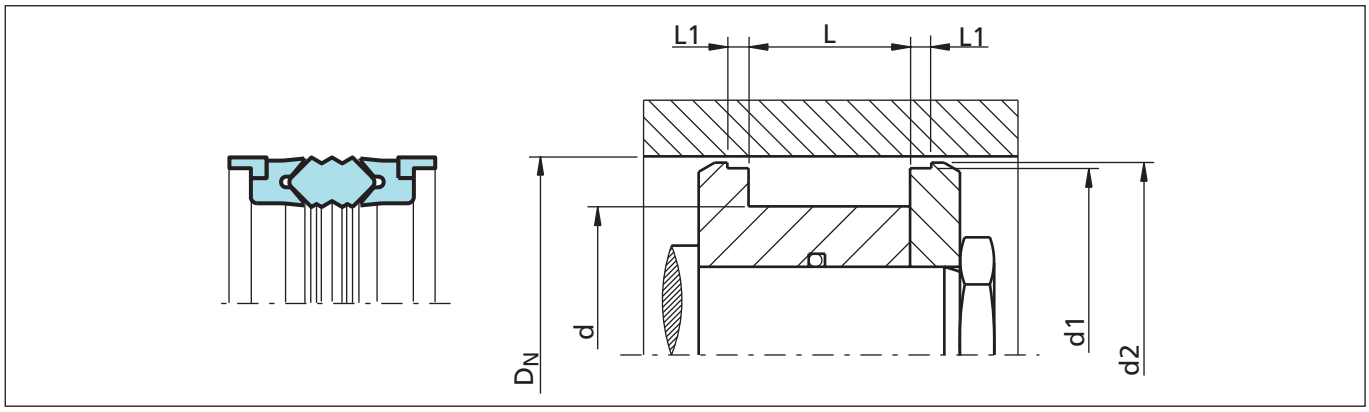

Figure 70 Installation drawing

Ordering Example

Selemaster DSM

Bore diameter:	D_N = 70.0 mm
Groove diameter:	d = 50.0 mm
Groove width	E = 35.0 mm
TSS Part No. (from Table LXIV):	PCK000700
Material code:	N8CO
Polypac Ref.:	DSM 275196/1A

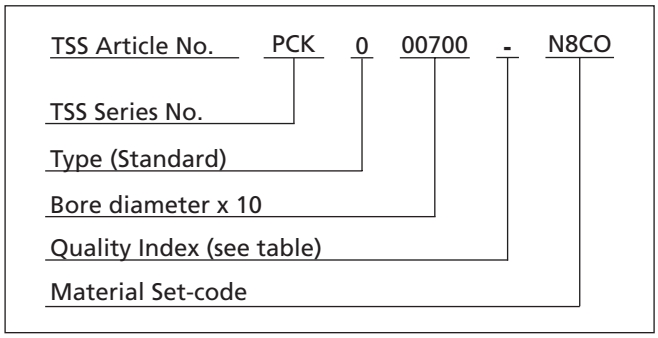

Table LXIV Installation dimensions / TSS Part No.

Bore Dia.	Groove Dia.	Groove Width	Groove Width	Diameter	Diameter		TSS Part No.	Description
D_N H11	**d** h11	**L** +0.2	**L1** +0.1	**d1** +/-0.05	**d2** +/-0.07			
45.00	29.00	32.00	6.35	38.80	42.80	^	PCK000450	DSM 177114/1A
50.00	34.00	32.00	6.35	43.77	47.80		PCK000500	DSM 196133/1A
55.00	40.00	32.00	6.35	48.77	52.80		PCK000550	DSM 216157/1A
60.00	44.00	32.00	6.35	53.80	57.80		PCK000600	DSM 236173/1A
63.00	47.00	32.00	6.35	56.74	60.80		PCK000630	DSM 248185/1A
63.50	47.62	31.75	6.35	57.25	61.30	^	PCK000635	DSM 250187/1A
65.00	49.00	32.00	6.35	58.70	62.80		PCK000650	DSM 255192/1A
70.00	50.00	35.00	9.52	62.62	67.50		PCK000700	DSM 275196/1A
75.00	55.00	35.00	9.52	67.70	72.50		PCK000750	DSM 295216/1A
80.00	60.00	35.00	9.52	72.62	77.50		PCK000800	DSM 314236/1A
80.00	64.00	32.00	9.52	72.62	77.50		PCK100800	DSM 314251/1A
85.00	65.00	35.00	9.52	77.62	82.50		PCK000850	DSM 334255/1A

^ Available upon request

Bore Dia.	Groove Dia.	Groove Width	Groove Width	Diameter	Diameter		TSS Part No.	Description
D_N H11	**d** h11	**L** +0.2	**L1** +0.1	**d1** +/-0.05	**d2** +/-0.07			
90.00	70.00	35.00	9.52	82.58	87.80		PCK000900	DSM 354275/1A
90.00	74.00	32.00	9.52	82.87	87.80		PCK100900	DSM 354291/1A
92.07	73.02	34.92	9.52	84.66	89.60	^	PCK000921	DSM 362287/1A
95.00	75.00	35.00	9.52	87.60	92.50		PCK000950	DSM 374295/1A
95.25	76.20	34.92	9.52	87.86	92.80	^	PCK000953	DSM 375300/1A
100.00	80.00	35.00	9.52	92.60	97.50		PCK001000	DSM 393314/1A
101.60	82.55	34.92	9.52	94.20	99.10		PCK001016	DSM 400325/1A
105.00	85.00	35.00	9.52	97.60	102.50	^	PCK001050	DSM 413334/1A
110.00	85.00	45.00	12.70	101.82	107.30		PCK001100	DSM 433334/1A
110.00	90.00	35.00	9.52	102.70	107.50		PCK101100	DSM 433354/1A
114.30	88.90	44.45	12.70	106.12	111.60		PCK001143	DSM 450350/1A
115.00	90.00	45.00	12.70	106.82	112.30		PCK001150	DSM 452354/1A
120.00	95.00	45.00	12.70	111.82	117.30		PCK001200	DSM 472374/1A
120.00	100.00	35.00	9.52	112.80	117.50		PCK101200	DSM 472393/1A
125.00	100.00	45.00	12.70	116.82	122.30		PCK001250	DSM 492393/1A
127.00	101.60	44.45	12.70	118.80	124.30		PCK001270	DSM 500400/1A
130.00	105.00	45.00	12.70	121.82	127.30		PCK001300	DSM 511413/1A
130.00	110.00	35.00	9.52	122.70	127.30		PCK101300	DSM 511433/1A
135.00	110.00	45.00	12.70	126.82	132.30		PCK001350	DSM 531433/1A
139.70	114.30	44.45	12.70	131.47	137.00	^	PCK001397	DSM 550450/1A
140.00	115.00	45.00	12.70	131.72	137.30		PCK001400	DSM 551452/1A
140.00	120.00	35.00	9.52	132.70	137.30		PCK101400	DSM 551472/1A
145.00	120.00	45.00	12.70	136.72	142.30		PCK001450	DSM 570472/1A
150.00	125.00	45.00	12.70	141.72	147.30		PCK001500	DSM 590492/1A
152.40	127.00	44.45	12.70	144.15	149.70	^	PCK001524	DSM 600500/1A
160.00	135.00	45.00	12.70	151.72	157.10		PCK001600	DSM 629531/1A
165.00	135.00	45.00	12.70	158.00	162.10		PCK001650	DSM 649531/1A
170.00	140.00	45.00	12.70	163.00	167.90		PCK001700	DSM 669551/1A
177.80	152.40	44.45	12.70	169.55	175.10		PCK001778	DSM 700600/1A
180.00	155.00	45.00	12.70	171.60	177.10		PCK001800	DSM 708610/1A
185.00	160.00	45.00	12.70	176.72	182.10		PCK001850	DSM 728629/1A
190.00	165.00	45.00	12.70	181.72	187.10		PCK001900	DSM 748649/1A
200.00	175.00	45.00	12.70	191.72	197.10		PCK002000	DSM 787688/1A
210.00	185.00	45.00	12.70	201.60	207.10		PCK002100	DSM 826728/1A
220.00	195.00	45.00	12.70	211.60	217.10		PCK002200	DSM 866767/1A
230.00	205.00	45.00	12.70	221.72	227.10		PCK002300	DSM 905807/1A

^ Available upon request

Bore Dia.	Groove Dia.	Groove Width	Groove Width	Diameter	Diameter		TSS Part No.	Description
D_N H11	**d** h11	**L** +0.2	**L1** +0.1	**d1** +/-0.05	**d2** +/-0.07			
240.00	215.00	45.00	12.70	231.72	237.10		PCK002400	DSM 944846/1A
250.00	225.00	45.00	12.70	241.72	247.10		PCK002500	DSM 984886/1A
260.00	235.00	45.00	12.70	251.72	257.10		PCK002600	DSM 1024925/1A
270.00	245.00	45.00	12.70	261.72	267.10		PCK002700	DSM 1062965/1A
280.00	255.00	45.00	12.70	271.72	277.10		PCK002800	DSM 11021004/1A
290.00	265.00	45.00	12.70	281.72	287.10		PCK002900	DSM 11411043/1A
300.00	275.00	45.00	12.70	291.72	297.10		PCK003000	DSM 11811082/1A
360.00	335.00	44.50	12.70	351.76	357.30		PCK003600	DSM 14171318/1A

^ Available upon request

Non Standard Seals

Available upon Request

Old Series

Special Series

Sealing Parts RSE/W

Single acting piston seal for dynamic applications. Installed in similar groove as B/NWO. The sealing element consist in a polyurethane U Cup and an L-shaped Back-up/guide ring.

Diameter Range mm	Pressure Range MPa	Temperature Range °C	Velocity m/s
32 - 120	Up to 25	-30 to +80	Up to 0.5

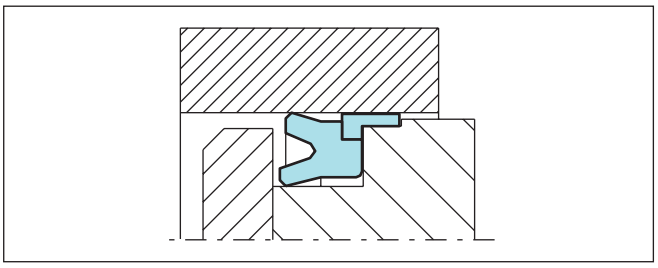

Sealing Parts RSE/W/AR

Sealing element identical to RSE/W with an additional retaining ring in front to allow easier installation.

Diameter Range mm	Pressure Range MPa	Temperature Range °C	Velocity m/s
32 - 120	Up to 25	-30 to +80	Up to 0.5

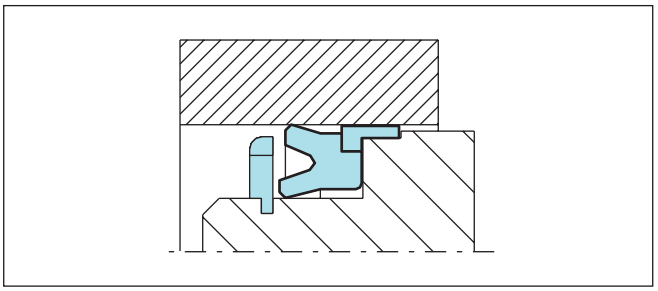

Polypac® D11W

Double acting piston seal for dynamic applications. Installed in open grooves. The NBR sealing element is supported at both sides by vulcanised cotton fabric reinforced rings with additional guide rings High sealing efficiency and high wear resistance.

Diameter Range mm	Pressure Range MPa	Temperature Range °C	Velocity m/s
25 - 300	Up to 50	-30 to +200	Up to 0.5

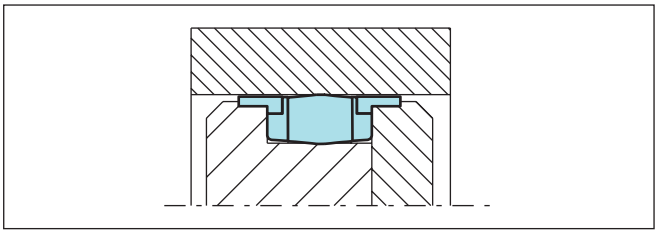

Polypac® DS - DS/NEO

Single acting piston U Ring for dynamic applications. Installed in open grooves. The U shaped sealing element is made out of cotton fabric reinforced NBR and provide with a NBR energiser ring and an additional POM back up ring can be integrated DS/NEO. High sealing efficiency and high wear resistance.

Diameter Range mm	Pressure Range MPa	Temperature Range °C	Velocity m/s
25 - 300	Up to 70 (DS/NEO)	-30 to +130	Up to 0.5

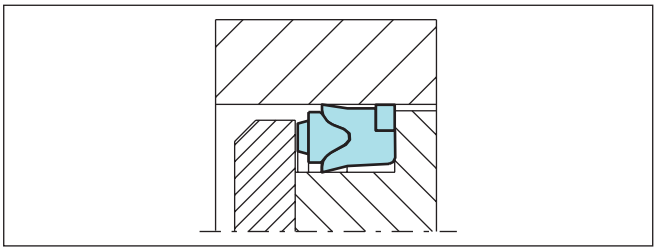

Polypac® B/NWO

Single acting piston seal for dynamic applications. Installed in open grooves. The nitrile sealing element is supported by a vulcanised cotton fabric reinforced ring with additional guide rings. High sealing efficiency and high wear resistance.

Diameter Range mm	Pressure Range MPa	Temperature Range °C	Velocity m/s
25 - 300	Up to 50	-30 to +200	Up to 0.5

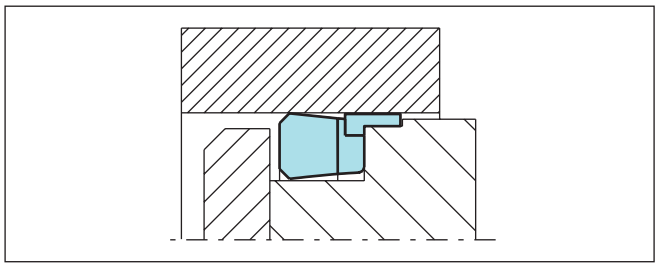

Polypac® B/NWO - KR

Same sealing element as B/NOW with an additional retaining ring in front to allow easier installation.

Diameter Range mm	Pressure Range MPa	Temperature Range °C	Velocity m/s
25 - 300	Up to 50	-30 to +200	Up to 0.5

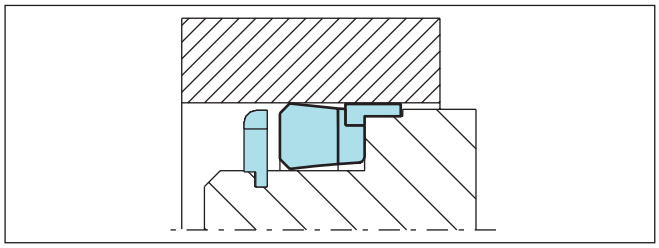

Polypac® B/NEO

Single acting piston seal for dynamic applications. Installed in open grooves. The nitrile sealing element is supported by a vulcanised cotton fabric reinforced ring with additional anti-extrusion ring. High sealing efficiency and wear resistance.

Diameter Range mm	Pressure Range MPa	Temperature Range °C	Velocity m/s
30 - 65	Up to 40	-30 to +130	Up to 0.5

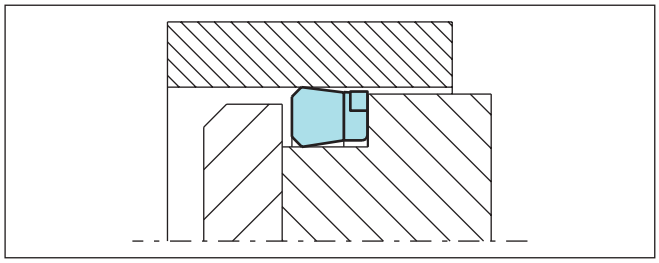

Turcon® Variseal® W

Single acting piston seal energised by a special helical spring. Its main advantage lies in its low friction and constant preloading force over a relatively large deformation range.

The Turcon® Variseal® W is used wherever friction has to be kept within a narrow tolerance zone.

Diameter Range mm	Pressure Range MPa	Temperature Range °C	Velocity m/s
8 - 2500	Up to 40	-70 to +260	Up to 15

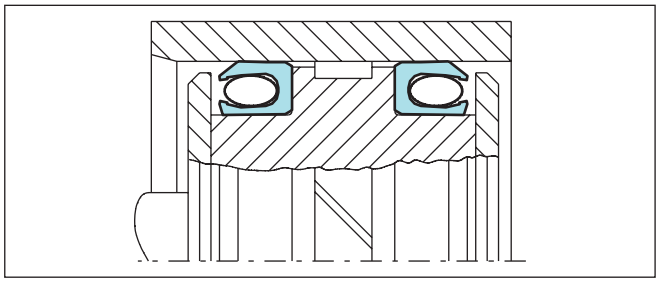

Turcon® Variseal® M2 CR

Single acting sealing element comprising a U-shaped Turcon® ring and a Stainless Steel energising V spring. Low friction with no Stick-slip, minimal break out force and high wear resistance. Resistant to most liquids and chemicals. Unlimited shelf life.

With integrated back up rings in material Zurcon® Z43 for higher pressures or larger gaps.

Diameter Range mm	Pressure Range MPa	Temperature Range °C	Velocity m/s
8 - 330	Up to 100	-45 to +260	Up to 5

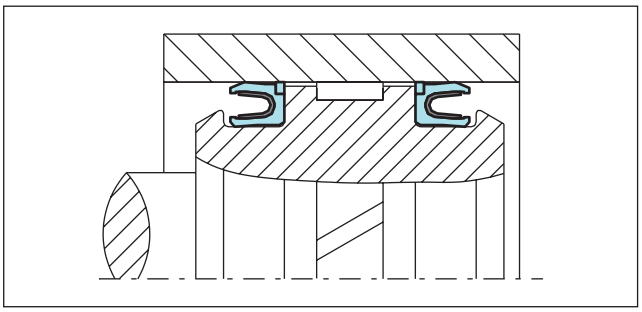

Turcon® Glyd Ring® CR

Double acting O Ring energised Piston Seal for dynamic applications. Installed in closed grooves including grooves to ISO 7425/1 as piston Turcon® Glyd Ring®. Low friction with no Stick-slip, minimal break out force and high wear resistance with integrated back up rings for higher pressures or larger gaps.

Diameter Range mm	Pressure Range MPa	Temperature Range °C	Velocity m/s
10 - 2700	Up to 100	-45 to +200	Up to 5

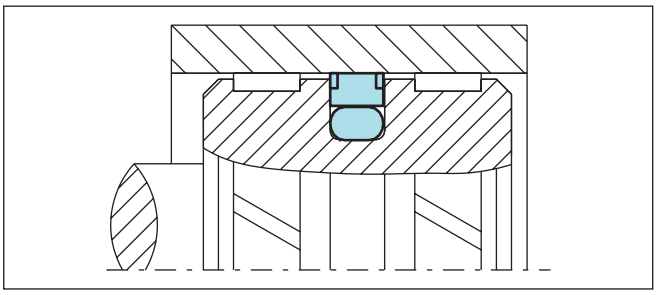

Turcon® Glyd Ring® Hz

Double acting O Ring energised Piston Seal for dynamic applications. Special design on the sealing based on two face to face Stepseal® profiles. The seal width is close to groove width to avoid axial movements.

The Glyd Ring® Hz is particularly dedicated to short strokes and high frequency applications. Installed in grooves according to ISO 7425 as piston Turcon® Glyd Ring®.

Diameter Range mm	Pressure Range MPa	Temperature Range °C	Velocity m/s
8 - 2700	Up to 40	-45 to +200	Up to 15

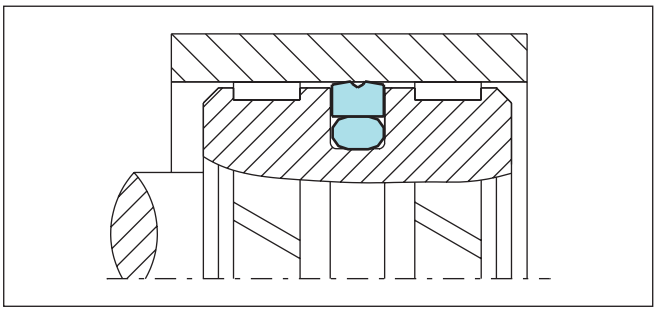

Captive Turcon® Glyd Ring®

For special applications where the Glyd Ring® has to slide across dimensional changes (e.g. go from a small diameter with sealing efficiency over the seal to a larger diameter with no sealing efficiency or vice versa).

In such applications Standard Glyd Ring® would be pressed out of the groove.

Diameter Range mm	Pressure Range MPa	Temperature Range °C	Velocity m/s
15 - 2700	Up to 60	-45 to +200	Up to 15

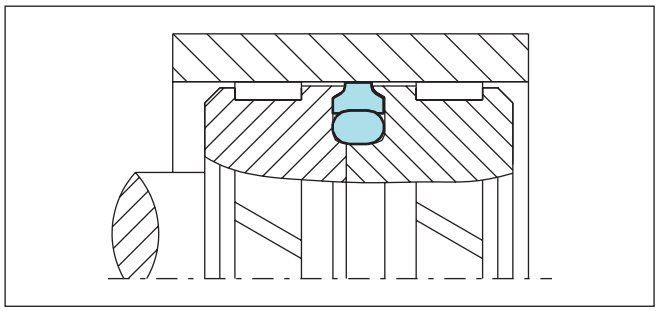

Turcon® Stepseal® 2A

Single acting primary seal for applications requiring stabilized seal position in the groove. A further development of Turcon® Stepseal® 2K by adding a stabilising edge, which prevents the seal from "tilting", cursed by seal-system pressure build-up between seals, in tandem configuration. It also increases assembly robustness through protection of the seal face during insertion of the rod. Same high sealing properties as Stepseal® 2K. Stepseal® 2A is used as primary seal in piston sealing systems preferably together with a secondary seal from the range of Turcon® and Zurcon® seals.

Installation in the same grooves as Turcon® Stepseal® 2K and grooves according to ISO 7425/1. Standard TSS Part Number is available.

Diameter Range mm	Pressure Range MPa	Temperature Range °C	Velocity m/s
10 - 2700	60	-45 to +200	Up to 15

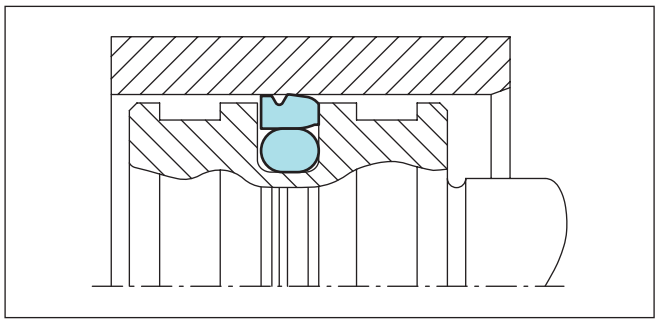

Turcon® Stepseal® 2A CR

Single acting O-Ring energized piston seal for dynamic applications. High sealing efficiency, low friction with no Stickslip, minimal break out force and high wear resistance with integrated back up ring for higher pressures or bigger gaps.Installed in closed grooves including grooves acc. ISO 7425/1

Standard TSS Part Number is available.

Diameter Range mm	Pressure Range MPa	Temperature Range °C	Velocity m/s
10 - 2700	100	-45 to +200	Up to 5

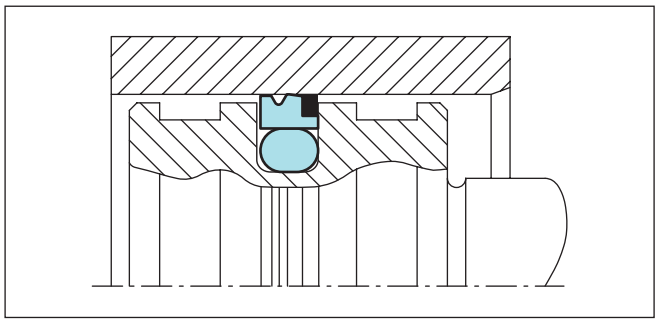

Special Turcon® AQ-Seal®

A double acting rubber energized seal development for sealing between two media, e.g. fluid/gas separation by incorporating a limited footprint elastomer Slim Bean Seal inset into the dynamic sealing face. Recommended for piston accumulators preferably in tandem configuration with a Turcon® Stepseal® V.

Installation in grooves according to ISO 7425 (the same as for standard Turcon® AQ-Seal®).

Diameter Range mm	Pressure Range MPa	Temperature Range °C	Velocity m/s
16 - 2300	40	-30 to +200	Up to 3

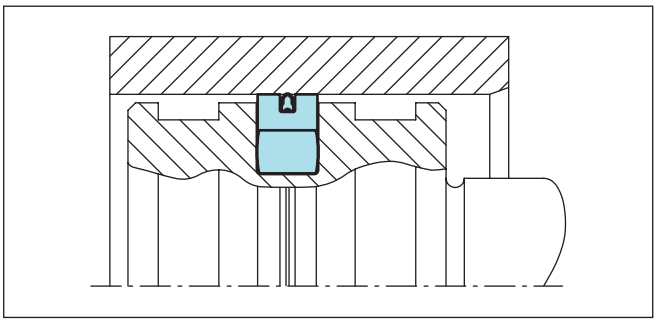

Turcon® Buffer Ring

Turcon® Buffer Ring is an uncut Piston Ring. With notches on one side the Ring is a single acting seal often used as protector of a common sealing system against peak pressures where the notch prevents risk of pressure trap. If a double acting sealing effect is required it is necessary to install two Buffer Rings, back to back, to take the pressure from both sides.For linear, helical and rotary movements.

Standard TSS Part Number is available.

Diameter Range mm	Pressure Range MPa	Temperature Range °C	Velocity m/s
8 - 2700	80	+5 to +160	Up to 15 (10 rotary)

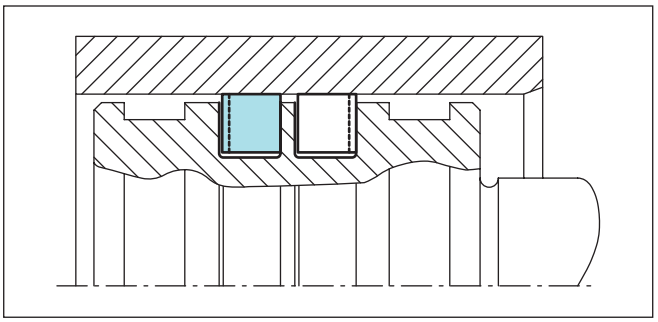

LOCAL CONTACTS

EUROPE

Austria – Vienna (Slovenia)
+43 (0) 1 406 47 33
Belgium - Dion-Valmont (Luxembourg)
+32 (0) 10 22 57 50
Bulgaria – Sofia
(Azerbaijan, Belarus, Greece, Romania, Ukraine)
+359 (0) 2 969 95 99
Croatia – Zagreb (Albania, Bosnia and Herzegovina, Macedonia, Serbia, Montenegro)
+385 (0) 1 24 56 387
Czech Republic - Rakovnik (Slovakia)
+420 313 529 111
Denmark – Copenhagen
+45 48 22 80 80
Finland – Vantaa (Estonia, Latvia)
+358 (0) 207 12 13 50
France - Maisons-Laffitte
+33 (0) 1 30 86 56 00

Germany - Stuttgart
+49 (0) 711 7864 0
Hungary – Budaörs
+36 (06) 23 50 21 21
Italy – Livorno
+39 0586 22 6111
The Netherlands - Rotterdam
+31 (0) 10 29 22 111
Norway – Oslo
+47 22 64 60 80
Poland – Warsaw (Lithuania)
+48 (0) 22 863 30 11
Russia – Moscow
+7 495 627 57 22
Spain – Madrid (Portugal)
+34 (0) 91 71057 30
Sweden – Jönköping
+46 (0) 36 34 15 00

Switzerland – Crissier
+41 (0) 21 631 41 11
Turkey – Istanbul
+90 216 569 73 00
United Kingdom - Solihull (Eire, South Africa)
+44 (0) 121 744 1221

Aerospace Hub Europe, North
(UK and Nordic Countries)
+44 (0) 121 744 1221
Aerospace Hub Europe, South & West
(Continental Europe and Middle East)
+33 (0) 1 30 86 56 00
Automotive Hub Europe
+49 (0) 711 7864 0

AMERICAS

Americas Regional
+1 260 749 9631
Brazil – São José dos Campos
+55 12 3932 7600
Canada Central – Etobicoke, ON
+1 416 213 9444
Canada East – Montreal, QC
+1 514 284 1114
Canada West – Langley, BC
+1 604 539 0098
Mexico - Mexico City
+52 55 57 19 50 05

USA, Great Lakes - Fort Wayne, IN
+1 260 482 4050
USA, East - Mt. Juliet, TN
+1 615 800 8340
USA, Midwest - Schaumburg, IL
+1 630 539 5500
USA, Northern California - Fresno, CA
+1 559 449 6070
USA, Northwest - Portland, OR
+1 503 595 6565
USA, Southwest - Houston, TX
+1 713 461 3495

Aerospace Hub Airframe
+1 303 469 1357
Aerospace Hub Distribution & Engineering
+1 260 749 9631
Aerospace Hub East
+1 610 828 3209
Aerospace Hub West
+1 310 371 1025
Automotive Hub North America
+1 734 354 1250
Automotive Hub South America
+55 12 3932 7600

ASIA PACIFIC

Asia Pacific Regional
+65 6 577 1778
China – Hong Kong
+852 2366 9165
China – Shanghai
+86 (0) 21 6145 1830
India – Bangalore
+91 (0) 80 3372 9000
Japan – Tokyo
+81 (0) 3 5633 8008
Korea – Seoul
+82 (0) 2 761 3471

Malaysia - Kuala Lumpur
+60 (0) 3 90549266
Taiwan – Taichung
+886 4 2382 8886
Vietnam – Ho Chi Minh City
+84 8 6288 6407
Singapore and all other countries in South and East Asia, Australasia
+65 6 577 1778

Aerospace Hub China
+86 (0) 21 6145 1830
Aerospace Hub Singapore
+65 6 577 1778
Automotive Hub China
+86 (0) 21 6145 1830
Automotive Hub India
+91 (0) 80 3372 9200

AFRICA, CENTRAL ASIA AND MIDDLE EAST

Africa & Iran (excluding South Africa (see UK))
+41 (0) 21 631 41 11

Central Asia (Armenia, Georgia, Kazakhstan, Kyrgyzstan, Tajikistan, Uzbekistan)
+7 495 627 57 22

Middle East and Gulf Region
+359 (0) 2 969 95 99

TRELLEBORG

Trelleborg is a world leader in engineered polymer solutions that seal, damp and protect critical applications in demanding environments. Its innovative engineered solutions accelerate performance for customers in a sustainable way. The Trelleborg Group has local presence in over 40 countries around the world.

facebook.com/TrelleborgSealingSolutions
twitter.com/TrelleborgSeals
youtube.com/TrelleborgSeals
flickr.com/TrelleborgSealingSolutions

WWW.TSS.TRELLEBORG.COM

99GBGOCATAE0111